DALI

DALI STAND 1

BOTTOM

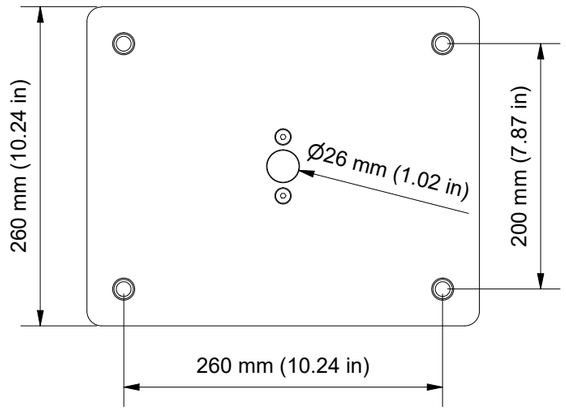

FRONT

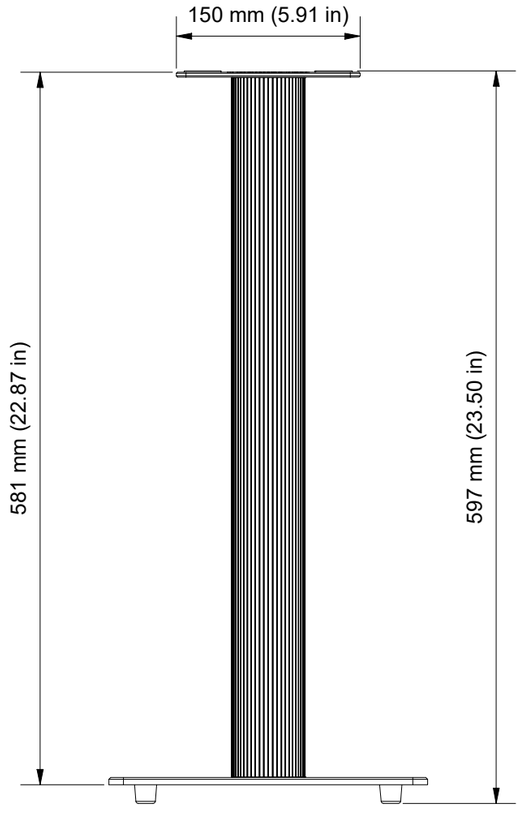

SIDE

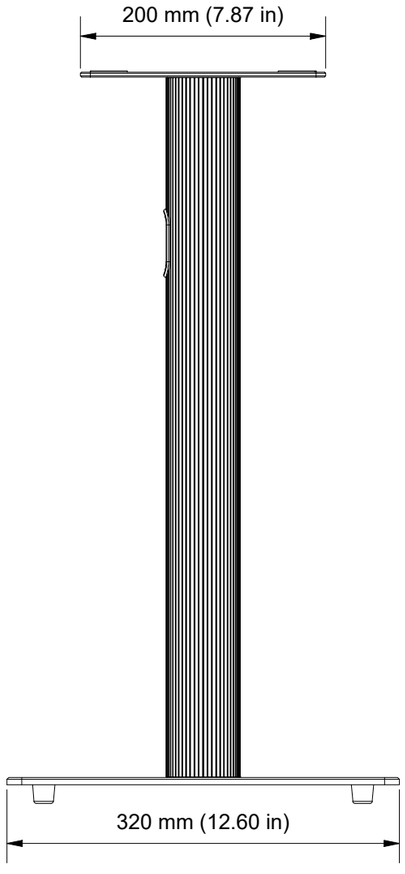

BACK

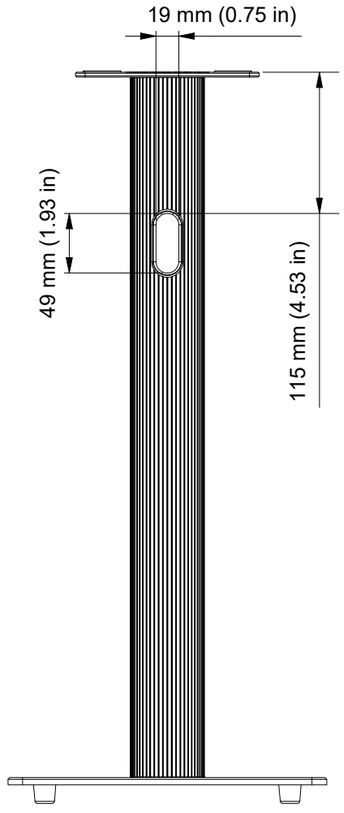

ISO VIEW

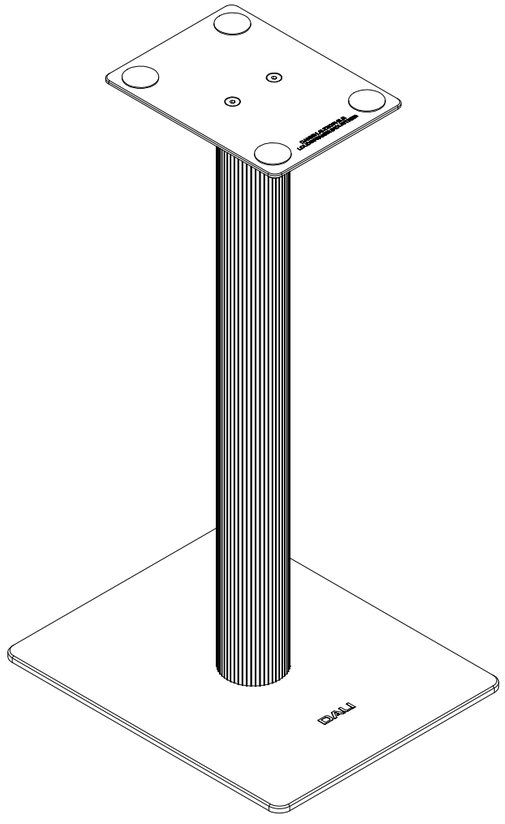

REVISION: A
DATE: 23-06-2026