DALI

PHANTOM K-80 WITH CLASSIC GRILLE

CUT-OUT DIMENSIONS

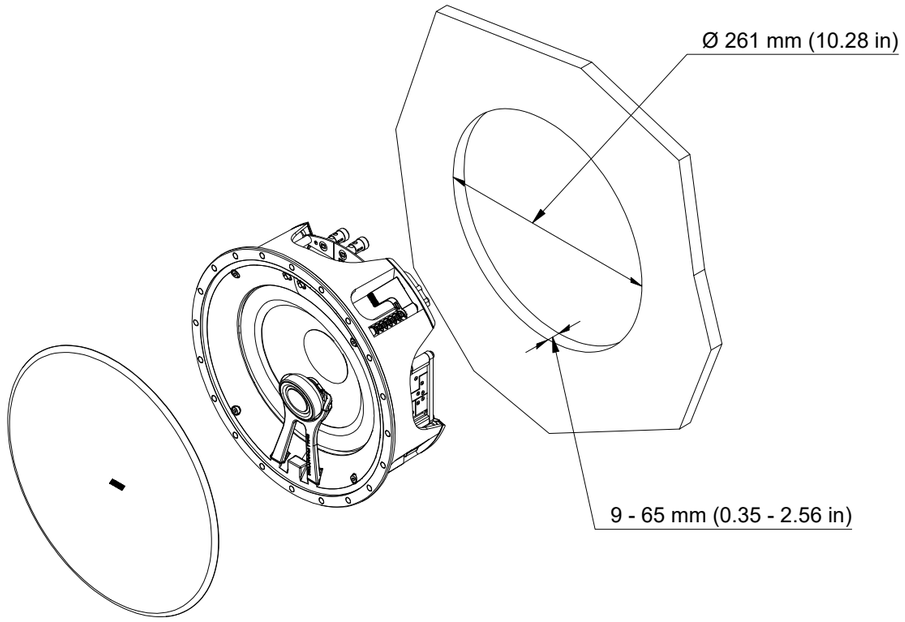

CEILING/WALL THICKNESS

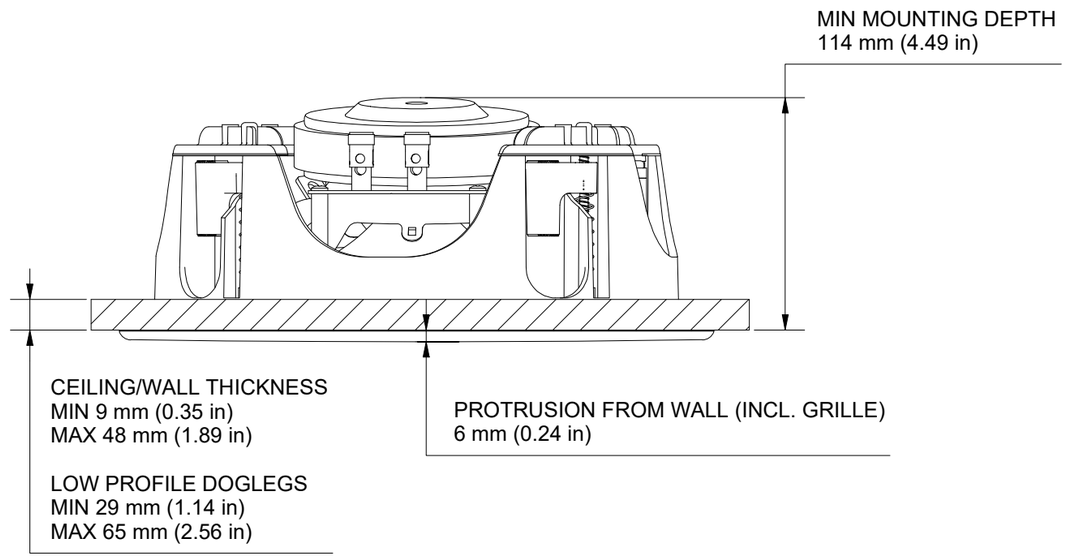

FRONT

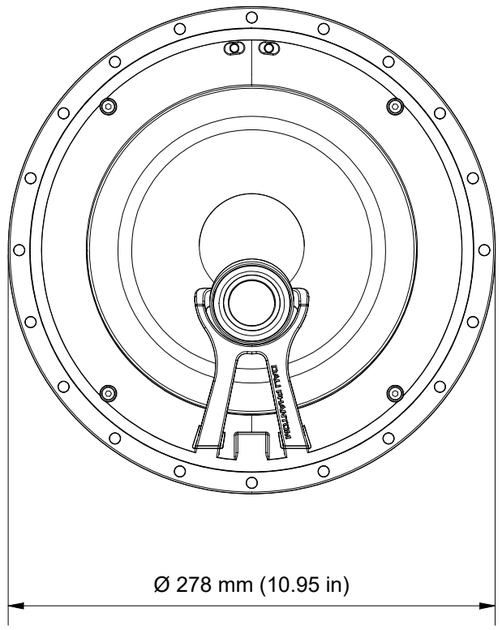

SIDE

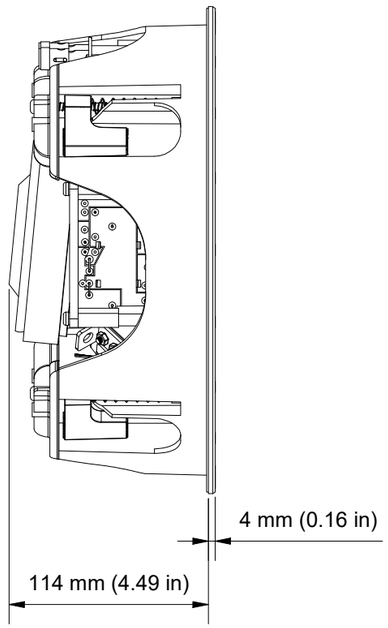

BACK

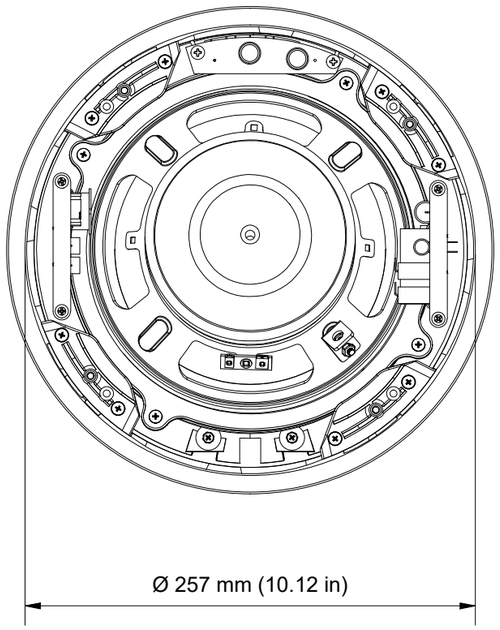

GRILLE

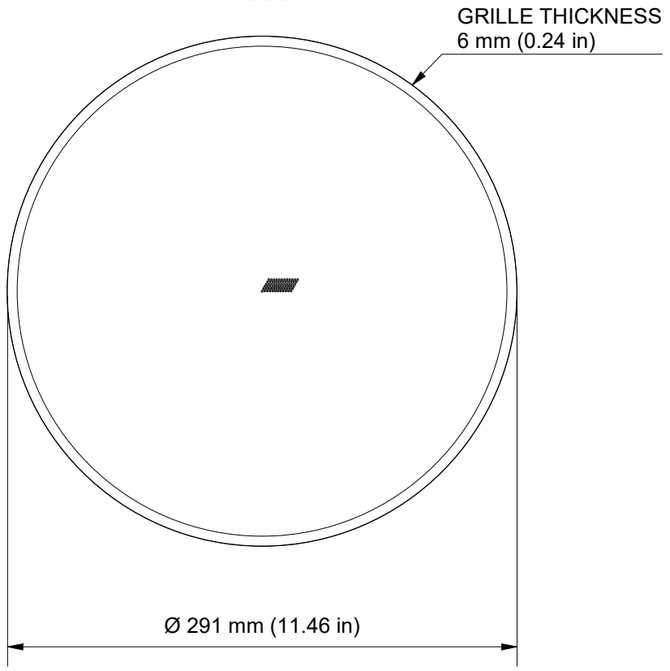

REVISION: F
DATE: 12-03-2026