Table of Contents

I. Introduction

A. Overview of JRC
B. Terms and Conditions

II. Scalloped Gun Perforating Systems

A. RTG Tubing Puncher Chart
B. JRC Slip-On Guns
- 1 9/16 in. - 2 1/2 in.

C. JRC Scalloped Guns
- 1 9/16 in. - 7 in.

D. VannGun™ Systems
- 1 9/16 in. - 7 in.

III. Ported Gun Perforating Systems

- 3 1/8 in. - 5 in.

IV. Capsule Gun Perforating Systems

A. Multiphased Dyna-Cap® Formed Bi-Wire Capsule Gun
B. Dyna-Cap® Four-Wire Capsule Gun
C. Dyna-Star™ Perforating System
D. Deep-Star™ Perforating System

V. Detonators, Detonating Cords, and Explosive Components

(Please see Appendix "A" for JRC's Recommended Detonating Cord Usage)

VI. Pipe Recovery

A. Coiled Tubing Cutters
B. Tubing Cutters
C. Super Tubing Cutters
D. Casing and Drill Pipe Cutters
E. C-4 Casing Cutters
F. Drill Collar Severing Tools
G. Junk Shot

VII. TCP Firing Systems and Ancillary Equipment

VIII. Wireline-Conveyed Firing Systems and Ancillary Equipment

VIX. Plugs and Setting Tools

A. Elite Magna-Range Bridge Plugs
B. Dump Bailers

Appendix A

A. Recommended Detonating Cord Usage
B. Bi-Directional Boosters
C. Detonating Cord Initiators

Appendix B

A. Accessories
B. Accessory Illustrations/Pictures
C. Charge Clips and Associated Tools
D. Bi-Directional Booster Transfer Kit

Appendix C

- Gun Swell Information

Appendix D

- O-Ring Selection Chart
- Time vs. Temperature Chart

© 2008 Halliburton. All Rights Reserved

Jet Research Center (JRC) originated and introduced jet perforating to the energy industry-forever changing the way oil and gas are produced. Located on more than 800 acres in Alvarado, Texas, JRC's Explosive Products Center is a fully integrated research, engineering, testing and manufacturing plant that produces advanced perforating systems and specialty explosive devices for the oilfield, including shaped charge perforators, RF-protected detonators, tubing and casing cutters, severing tools, and platform removal charges.

Research and Engineering

JRC's premier technical staff includes a balance of engineers, designers, and technicians, who are among the most knowledgeable experts in the perforating industry. Their backgrounds range from doctoral and Master's level engineers to highly skilled explosive technicians-some with more than 25 years experience. We utilize the latest techniques and equipment in our design work, including:

- sophisticated hydrocodes such as DYNA-2D and CTH that model the high strain rate deformations of materials subjected to explosive loading.
- analytical computer programs that predict the response of structures to explosive impulse loads.
- CHEETAH code for predicting state properties of reacting explosives and the resulting detonation products.

Testing

- **Perforation Flow Laboratory** provides a means to measure the flow or injection characteristics of a perforation tunnel created by a shaped charge, allowing design engineers to tailor shaped-charge performance to optimize well productivity. The flow laboratory is able to handle a wide range of test conditions and materials, including hard rocks and fully unconsolidated formations with permeabilities ranging from 0.001 to 2.0 Darcy.
- **Flash X-Ray Equipment** allows us to study the details of explosive events in nanosecond resolution allowing us to improve the performance of new and existing shaped-charge designs. All information and data gathered with the Flash X-Ray is utilized, building into every JRC charge the reliability and performance expected in the field.
- **API RP43 Testing Facilities** available for conducting tests.
- **Firing Chambers and Shooting Bunkers** are available for testing a wide range of devices-less than 1 gram of explosive to more than 25 lb. In addition, scaled tests can simulate even larger tests.
- **Pressure Vessels and Thermal Ovens** are available to test explosive components and systems to conditions up to 30,000 psi (207 MPa) and 500°F (260°C). High-speed multi-channel oscilloscopes, piezoelectric pins, ballistic pressure transducers, and other specialty instrumentation are routinely used to conduct diagnostic experiments on explosive components and systems.
- **Shooting Pond** is used for conducting underwater test shots and for verifying gun survival in fluid.
- **Air Shot Test Enclosure** is specially designed test pit for conducting full-length gun survivability shots in air.

Manufacturing

In the manufacturing process, the emphasis on quality and consistency has resulted in a continual progression toward automation. This produces a more accurate and consistent charge, while at the same time providing a more cost-effective and safer production process.

- High quality metal powders blended and tested to extend perforator performance and storage life
- Spinning and vibrating sub-presses used with computerized hydraulic pressing systems to fabricate powdered metal liners
- High purity explosive powders tested for melting point, flow characteristics, and moisture content
- Computer controlled electronic powder weigh stations integrated into the automated charge presses to ensure accurate and consistent measures of explosive powder for each charge
- Automated hydraulic pressing units help maintain high levels of concentricity between the case and liner for optimum charge performance
- Melt/Pour Facility available for melting and casting TNT-based explosives
- State-of-the-art laser tubular cutting technology
- World-class perforating hardware machining center
- First explosive manufacturer in US to gain OSHA VPP Merit plant status

Contact

For more information about Jet Research Center:

Research, Test and Manufacturing Facility:
Jet Research Center
8432 South I-35W
Alvarado, Tex 76009-9775
Telephone: 1-800-451-5403
817-761-2000
Fax: 817-783-5812

Products and Services Location:
Jet Research Center
5429 Highway 90 East
Broussard, LA 70518
Telephone: 318-837-2681
Fax: 318-837-2545

Jet Research Center:
2802 Delmar
Victoria, TX 77951
Telephone: 361-580-3150
Fax: 361-580-3186

Jet Research Center:
Dee Facility,
Howe Moss Avenue
Kirkhill Industrial Estate
Dyce, Aberdeen, AB21 OGP
Telephone: 01224 795174
Fax: 01224 724862

Jet Research Center:
10200 Bellaire Blvd.
Houston, TX 77047
Telephone: 281-988-2525
Fax: 281-988-2105

GENERAL TERMS AND CONDITIONS OF SALE

All orders from Buyer are subject to final acceptance by Jet Research Center, a Division of Halliburton Energy Services Inc. (hereinafter "JRC") and to the terms and conditions set out herein. Terms and conditions set forth in Buyer's order shall be null and void unless specifically accepted by JRC in writing. Performance by JRC pursuant to an order by Buyer shall not constitute acceptance by JRC of Buyer's terms and conditions. No modification of these terms and conditions shall be effective unless agreed to by JRC in writing.

1.0 PRICE

1.1 All prices are expressed in United States dollars net Ex-works JRC's dock and, unless otherwise agreed in writing by JRC, are subject to change without notice and are at the rates in effect at the time of acceptance of an order. Quotations will be given on request for items not shown on JRC's Price List. Any quotation will remain in effect only for the period of validity specified therein or, if no such period is stated, for thirty (30) days from date the quotation is given. However, JRC may, at its option, extend the period of validity of the quotation with a price escalation of two percent (2%) per month beyond the initial period of validity up to a maximum of ten percent (10%).

1.2 All prices are exclusive of costs transportation and insurance and federal, state and local use, sales, property (ad valorem) and similar taxes and license fees, import duties and the like. Buyer agrees, by purchase of an item, to pay such costs, taxes, fees and duties, and where appropriate, report the same. When applicable, such costs, taxes, fees, and duties will appear as separate items on JRC's invoice.

1.3 In the event JRC employs an attorney for collection of any account, Buyer agrees to pay JRC's reasonable and necessary attorney fees, but in no case shall the attorneys fees be less than 20% of the unpaid account, plus all collection and court cost.

2.0 PAYMENT

2.1 Payment for all items in the United States funds by irrevocable letter of credit or net cash. Letters of credit must be opened with or confirmed by Citibank N.A. (ABA #021000089), 399 Park Avenue, New York, New York 10043 USA; credit for Halliburton Energy Services, Inc. Account #00032969, nominated or approved by JRC, or cash paid within thirty (30) days of acceptance of order. All banking charges are payable by Buyer. Letters of credit must be valid for at least three (3) months after the specified delivery date of the last of the items purchased, must not contain deferred payment provisions, and must allow transshipment and partial deliveries.

2.2 No action will be taken to fulfill any order until letter of credit or payment has been received by JRC.

3.0 DELIVERY AND EXCUSABLE DELAYS

3.1 All shipment and/or delivery dates quoted are estimates and are subject to JRC's availability schedule. JRC will make every reasonable effort to meet any delivery date(s) quoted; however, JRC will not be liable for its failure to meet any quoted delivery date(s) or for any delay in performance due to any unforeseen circumstances or any causes beyond JRC's reasonable control including, without limitation, strike, lockout, riot, war, fire, acts of God, accident, failure or breakdown of parts necessary for completion, delays in transportation, delays caused by subcontractors or suppliers or Buyer, shortage of cars, shortage of fuel, inability to obtain labor, materials or manu facturing facilities, or compliance with any law, regulation or order, whether valid or invalid, or any governmental body or instrumentality thereof. Performance shall be deemed suspended during and extended for such time as any such circumstances or causes delay its execution. Whenever such circumstances or causes have been remedied, JRC will make and Buyer shall accept performance hereunder. No penalty clause of any kind shall be effective. As used herein, performance shall include, without limitation, fabrication, assembly, shipment, delivery, and warranty repair or replacement as applicable.

4.0 PACKING

All items shall be packed, if appropriate, for shipping and storage in accordance with standard commercial practices.

5.0 SHIPMENT

5.1 All prices are net Ex-works JRC's dock unless otherwise specified in the quote. Buyer will pay all rigging, draying and transportation charges.

5.1 Normally, JRC will ship in accordance with Buyer's shipping instructions. In the absence of shipping instructions or if JRC considers Buyer's shipping instructions unsuitable, JRC reserves the right to ship by the most appropriate method. JRC reserves the right to ship to engage the services of a forwarder of its choice in the United States.

6.0 TITLE AND RISK

Title to items sold and risk loss and damage shall pass to Buyer upon delivery by JRC to common carrier or Buyer as the case may be, except that title to (but not risk of loss) shall in the case of items supplied upon credit terms not pass until payment in full has been received by JRC.

7.0 CHANGES, CANCELLATIONS, AND RETURNS

7.1 In furtherance of its policy of continuous product improvement, JRC reserves the right to change designs, materials and specifications, and to discontinue items without any notice or liability to Buyer and without any obligation to furnish or install such changes on products previously or subsequently sold.

7.2 If Buyer issues a change order or cancels an order, Buyer shall be liable to pay to JRC for the whole cost and loss incurred by JRC resulting from such change or cancellation, as such is determined by JRC, which shall include all costs, direct and indirect, plus a pro rata proportion or normal profit.

7.3 No credit shall be given for any item returned unless returned with the prior approval of an authorized representative of JRC. All items must be returned with a written declaration by Buyer stating the reason for the return and the name of the authorized representative of JRC authorizing the return. Only sales managers or officers of JRC are authorized to approve return of items. Risk of loss or damage in respect of any item returned with JRC's authorization will remain with Buyer until redelivery to JRC. A charge of not less than fifteen percent (15%) or such larger amount as JRC may consider reasonable in circumstances, with a minimum of $10.00 per item, will be charged by JRC on all items returned to pay for cost of inspection, repacking, handling, credit arrangements, etc. JRC shall not be responsible for holding or accounting for any item returned without prior authorization by JRC and/or unaccompanied by the required written declaration.

7.4 If freight and other transportation costs are not prepaid on any returned item, the cost thereof will be deducted from the credit issued. No credit will be given on any non-standard item manufac tured at the request or to the individual specifications of Buyer.

8.0 OTHER MANUFACTURER'S EQUIPMENT

Where any item supplied by JRC contains any part or parts obtained by JRC from or supplied by another manufacturer, JRC has no responsibility or liability whatever therefor other than to transfer to Buyer any rights capable of transfer that JRC may have in respect thereof.

9.0 USE AND ACCEPTANCE OF ITEM

9.1 Buyer warrants, by purchase of an item, that Buyer is familiar with the item and its proper use, handling, shipping and storage and JRC gives no warranty of fitness or merchantability of any item for any specific purpose or use. Before using any item, Buyer shall give such item reason able and prudent examination and/or tests to determine the suitability of item for Buyer's intended use. Any item delivered to Buyer shall be deemed accepted by Buyer unless written notice of defect or nonconformity is received by JRC within thirty (30) days of date of receipt by Buyer. Buyer assumes all risk and liability in connection with an item from time of delivery to Buyer.

9.2 Inspection of any item(s) by Buyer is made at JRC's designated plant in the United States and at Buyer's expense and such inspection and acceptance shall be final. Reasonable facilities will be afforded to inspectors representing Buyer. If Buyer requires expediters, inspectors, and/or agents, JRC will make available personnel to assist Buyer's expediters, inspectors, and/or agents during normal working hours at JRC's designated plant in the United States and charges for JRC's personnel in the amount of $25.00 per employee, per hour or any part thereof if less than one hour, will be added to the price quoted for the item(s).

10.0 ASSISTANCE TO BUYER

At Buyer's request, JRC may at, its discretion, make available to Buyer employee(s) of JRC for the purpose of training Buyer or Buyer's employees in the operation of an item supplied by JRC or such other duties as JRC may agree upon the basis only that Buyer, by such request, agrees and accepts that JRC's employee(s) shall be under the direction and control of Buyer and be the full responsibility of Buyer and that Buyer shall supply all necessary equipment and supplies for proper provision of the service(s) to be performed by JRC's employee(s). All costs associated with the provision of JRC employees hereunder shall be borne by Buyer. JRC shall have no liability whatever to Buyer for such employee(s) while under the direction and control of Buyer as aforesaid.

11.0 WARRANTY

11.1 Buyer, by purchase of an item, agrees and accepts that THERE ARE NO WARRANTIES, EXPRESS OR, IMPLIED, OF MERCHANTABILITY, FITNESS OR OTHERWISE, made or given by JRC in respect of any item supplied by JRC. JRC warrants each new item (excluding any part or parts thereof to which Condition 8 hereof applies) to be free from defects in materials and workmanship if, and only if, all of the following conditions are met:

11.1.1 The item claimed to be defective has been exposed only to normal use and service, has been reasonably maintained and kept lubricated, has been otherwise used in accordance with JRC's instructions and has not been subject to misuse, negligence or accident, nor repaired or altered, except by an authorized representative of JRC, in a manner which in JRC's judgment may affect its stability or reliability;

11.1.2 The item claimed to be defective has been returned at Buyer's expense to JRC's plant in the United States (or such other location as JRC may designate) within ten (10) days after Buyer first discovers the alleged defect;

11.1.3 Examination of the item by JRC, upon return, satisfies JRC that the circumstances referred to in Condition 11.1.1 apply and the defect claimed is due or traceable to defect in original materials or workmanship;

11.1.4 The item is not one expendable in normal use which has been expended in normal use.

11.2 JRC's liability under the foregoing warranty shall be restricted to the repair or replacement of the item covered at no cost to Buyer other than as set forth in Condition 11.1.2, but subject, if appropriate, to Buyer paying or reimbursing JRC for fair wear and tear to such item arising in normal use and service as aforesaid or, at JRC's option, refund or an equitable proportion of the purchase price. Repairs or replacement items are only warranted for the remaining unexpired portion of the original warranty period.

11.3 The foregoing warranty shall remain in effect only for the period of six (6) months immediately following date of receipt of item by Buyer, provided that (i) in the case of surface and subsurface electronic equipment such period will be ninety (90) days, and (ii) in the case of scintillation detectors, the only warranty given is that they shall be in working order upon delivery to Buyer.

11.4 No attempt to repair or undertaking or promise to repair, replace or improve an item by any representative of JRC shall have the effect of waiving, changing or extending the foregoing warranty in any way whatever unless agreed to by JRC in writing.

11.5 All claims under the foregoing warranty must be made promptly after occurrence of the circumstances giving rise thereto and must be received by JRC within the applicable warranty period. Such claim should include the item's description, part number, serial number (if any), date of shipment or delivery and a full description of the circumstances giving rise to the claim. Any item returned for claim purposes shall be sent prepaid by appropriate transportation. JRC reserves the right to reject any claim not promptly reported. Buyer is responsible for all damage or loss resulting from improper packing or handling, and loss in transit until redelivery to JRC. If any item is returned without cause and found out to be serviceable, Buyer will be notified and the item returned to Buyer at Buyer's expense. In addition, JRC may charge Buyer for testing and examination thereof.

11.6 THE FOREGOING WARRANTY IS THE ONLY WARRANTY, EXPRESS, IMPLIED OR STATUATORY, UPON WHICH ANY ITEM IS SOLD BY JRC, AND BUYER'S SOLE REMEDY IN ANY CAUSE OF ACTION (WHETHER IN TORT, CONTRACT BREACH OF WARRANTY, OR OTHERWISE) ARISING HOWSOEVER ON THE SALE AND PURCHASE OR USE OF ANY ITEM SUPPLIED BY JRC IS EXPRESSLY LIMITED TO THE REPAIR OR REPLACEMENT OF THE ITEM CONCERNED ON THE TERMS AND SUBJECT TO THE CONDITIONS AS HERE INBEFORE PROVIDED AND ALL OTHER DAMAGES AND WARRANTIES, STATUTORY OR OTHERWISE, ARE EXPRESSLY AGREED TO BE WAIVED BY BUYER BY PURCHASE OF THE ITEM CONCERNED. IN NO EVENT SHALL JRC BE LIABLE FOR ANY INJURY, LOSS OR DAMAGE, DIRECT, CONSEQUENTIAL, SPECIAL, INCIDENTAL, INDIRECT, OR PUNITIVE, ARISING OUT OF THE SUPPLY OR USE OF ANY ITEM.

12.0 HOLD HARMLESS TERMS

12.1 To the maximum extent allowed by applicable law, Buyer agrees to release JRC, its parent, subsidiary, affiliated companies, subcontractors and vendors and insurers and its/their officers, directors, employees and agents herein referred to as "JRC Group", from liability for any and all damages whatsoever to property of any kind owned by, in the possession of or leased by Buyer. Buyer also agrees to defend, indemnify and hold JRC Group harmless from and against any and all liability, claims, cost, expenses, attorney fees, and damages whatsoever for personal injury, illness, death, property damage and loss resulting from:

> Loss of well control; services to control a wild well whether underground or above the surface; reservoir or underground damage, including loss of oil, gas, other mineral substances or water; surface damage arising from underground damage; damage to or loss of the wellbore; subsurface trespass or any action in the nature thereof; fire; explosion; subsurface pressure; radioactivity; contamination and pollution of any kind and its cleanup and control.

12.2 Buyer's release, defense, indemnity and hold harmless obligations will apply even if the liability and claims are caused by the sole, concurrent, active or passive negligence, fault or strict liability of one or more members of the JRC Group, the unseaworthiness on any vessel or any defect in data, products, supplies, materials or equipment furnished by JRC Group whether in the design, manufacture, maintenance or marketing thereof or from a failure to warn of such defect.

13.0 COMPLIANCE WITH EXPORT LAWS

13.1 The parties acknowledge that the laws of the United States regulate the movement between countries of such goods and services, whether it be the initial export from the US or any subsequent movement across an international border. JRC cautions that any change in use, change in country of use or use by a party other than Buyer may alter the status of the goods and services under applicable laws of the United States and the country of use and may restrict or prohibit such change. Buyer agrees that it shall in no case be party to a transaction which would allow such goods or services to be used in connection with the design, production, use or storage of chemical, biological or nuclear weapons or missiles of any kind or would result in a violation of or punishable offense under United States law. Additionally, Buyer, without limitation, agrees that absent express license authorization, Buyer shall not (i) re-export any item directly or indirectly, in whole or in part, from the authorized country(ies) of ultimate destination as approved in the appropriate US export license; or (ii) export any such item from the United States with the knowledge that it is to be re-exported directly or indirectly, in whole or in part, from the authorized country(ies) of ultimate destination as approved in the appropriate US export license.

13.2 Any JRC obligation to supply goods and services to Buyer is subject to its ability to do so under applicable law current from time to time hereafter, including its ability to secure a license from the appropriate agency of government. Any failure of JRC to comply with such an obligation or delay in compliance arising out of or in connection with applicable law or inability to obtain a license shall be deemed a force majeure event and not a breach of contract. Further, Buyer agrees to comply with all terms and conditions of such licenses regarding export, re-export, transship ment and/or disclosure of the details of any item supplied by JRC under such licenses. Acceptance of any order for any item an contract or agreement relating thereto shall be subject to and be deemed to include the condition that it is conditional upon such licenses being granted. In the event of any such license being in terms not acceptable to Buyer and Buyer cancels an order or contract or agreement, Condition 7.2 hereof shall apply.

14.0 ARBITRATION

Any claims, disputes, or controversies between the Parties arising out of these General Terms and Conditions, which exceed $10,000.00 in value and which cannot be settled by mutual agreement shall, upon written notice by one Party to the other, be finally settled by arbitration in accordance with and subject to the Rules of Arbitration of the American Arbitration Association. All arbitration hearings or proceedings shall be held in Houston, Harris County, Texas. The Party desiring arbitration shall notify the other party in writing of the matter to be arbitrated and the name of the arbitrator selected by it. Within ten (10) days after receipt of such notice, the other Party shall appoint an arbitrator and shall forthwith notify the first Party of such appointment. The two arbitrators named shall within ten (10) days appoint, in writing, a third arbitrator. Pending a decision by the majority of the arbitration panel, both parties agree to take no action, which might upset the status quo or prejudice the respective positions of the Parties with respect to the matter in controversy. A decision by the majority of the arbitration panel with respect to the matter in controversy shall be final and binding on the parties, and judgment on any award so rendered may be entered in any court having jurisdiction.

15.0 MISCELLANEOUS

15.1 All of these Terms and Conditions including Buyer's warranties and undertaking to hold JRC harmless and indemnifying JRC shall also apply in favor of all subsidiaries and affiliates of JRC and in favor of any manufacturer or supplier of any part or parts of any item supplied by JRC, and their respective agents, servants, officers, and employees.

15.2 Failure by JRC to enforce any or all of these General Terms and Conditions in any case or cases shall not constitute a waiver of or preclude subsequent enforcement of any or all such General Terms and Conditions.

15.3 Any attempted or purported assignment or transfer of any of the rights, duties or obligations herein contained shall render such attempted or purported assignment or transfer null and void, provided that JRC may perform and fulfill all or any of its obligations hereunder by or through one or more of its said subsidiaries and affiliates.

15.4 Certain items contain or embody confidential and proprietary information and to protect such information from unauthorized disclosure, Buyer undertakes not, without the prior written consent of JRC, (i) to disclose to any third party (other than employees of Buyer) any detail or feature or part of any item or any specification or drawing relating thereto without first containing a similar undertaking of nondisclosure from such third party nor (ii) to sell any item without the purchaser thereof being subject to an obligation similar to this Condition 14.4.

15.5 If any provision of these General Terms and Conditions is capable of more than one construction, one or more of which would render the provision void and one which would render the provision valid, the provision shall be interpreted in the manner which would render it valid. If any provision is determined to be void by court of competent jurisdiction, such determination shall not affect any other provision and such other provision shall remain in full force and effect. These General Terms and Conditions shall be interpreted and receive effect in accordance with the law of the State of Texas, notwithstanding conflicts of law principles that would refer to the law of another jurisdiction.

The headings used in these General Terms and Conditions are for convenience and ease of reference only and shall not be used in the interpretation hereof.

The clauses contained in these General Terms and Conditions of Sale shall be construed as one document in its entirety.

Jet Research Center offers a variety of reliable scalloped gun perforating systems. These systems are used for under-balanced, through-tubing, and hostile perforating applications. This section provides information concerning:

- Tubing Puncher Chart
- JRC Slip-On Gun Systems
- JRC Scalloped Gun Systems
- VannGun™ Systems

Applications

- Run as tubing conveyed system, the guns are well-suited for high under-balanced or extreme over-balanced completions.
- Run as a coil tubing conveyed system, tubing conveyed techniques are available.
- Run as a wireline conveyed system, the gun system is intended to offer safe and reliable perforating for standard completions.

Features

- Available in various gun lengths, phasings, and shot densities (depending on gun size).
- Available in single-tandem or VannGun connections
- Explosives transfer eliminates side detonation and cord problems.
- Most charge debris remains in the gun.
- All gun systems are collapse and survival tested.
- All guns are adaptable to any firing system.

Tubing Puncher Hole Size Information

Charge Description	Part Number	Steel Plate 80 KPSI Min Yield		Color Code
		Thickness	Hole Size	
1 9/16", HMX, alum, 2.5 gm	100005306	.250 thru .375	0.340	Red
1 9/16", HMX, P/M cu, 2.6 gm	100000139	.375 thru .500	0.210	Green
2", HMX, alum,6.5 gm	100014486	.500 thru .625	0.420	White

Notes:
1. Charges shown above are now used in standard 1 9/16-in. and 2-in. JRC Scalloped Gun Perforating Systems.
2. Special Gun Sizes may be ordered upon request.
3. Varying downhole conditions may affect performance. Consult JRC foradditional information.

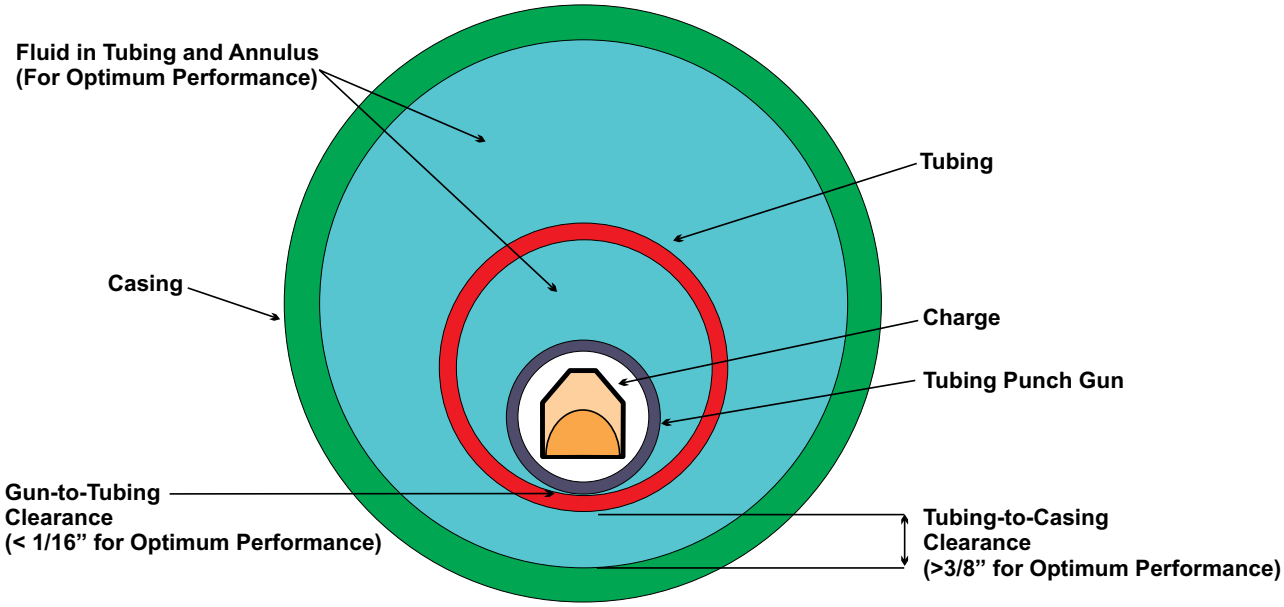

General Setup

1 9/16-in. 4-spf 0° Slip-On Tubing Puncher

Item	Description	Part No.
	Shipping Assembly - 4 ft	101247682
	Shipping Assembly - 7 ft	101247683
	Shipping Assembly - 11 ft	101247684
	Shipping Assembly - 15 ft	101247685
	Shipping Assembly - 21 ft	101247686
*1	Gun, Scallop - 4 ft	101247275
	Gun, Scallop - 7 ft	101247298
	Gun, Scallop - 11 ft	101247299
	Gun, Scallop - 15 ft	101247301
	Gun, Scallop - 21 ft	101247302
*2	Strip, Charge Holder - 4 ft	101247427
	Strip, Charge Holder - 7 ft	101247428
	Strip, Charge Holder - 11 ft	101247429
	Strip, Charge Holder - 15 ft	101247430
	Strip, Charge Holder - 21 ft	101247431
*3	Screw, Cap 0.25” D x 0.25” L	101265663
*4	Screw, Cap 0.25” D x 0.375” L	101265579
5	Firing Head - GO™ Style	101274746
6	Bull Plug	101250245
7	Tandem, Grooved	101247486
8	O-Ring, Buna 90 Duro #214	100001949
	O-Ring, Viton 95 Duro #214	100003922
9	Charge - 1 9/16-in. HMX Alum, 2.5 gm	100005306
	Charge - 1 9/16-in. HMX P/M cu, 2.6 gm	100000139
**10	Charge Clip	101275254
11	Detonating Cord (40 Flat Recommended)	See Appendix A
12	Detonator, Electric	See Det. Section
13	Blast Sleeve	101305303

*Included in Shipping Assembly
**Charge clips must be ordered separately
N/S - Not shown

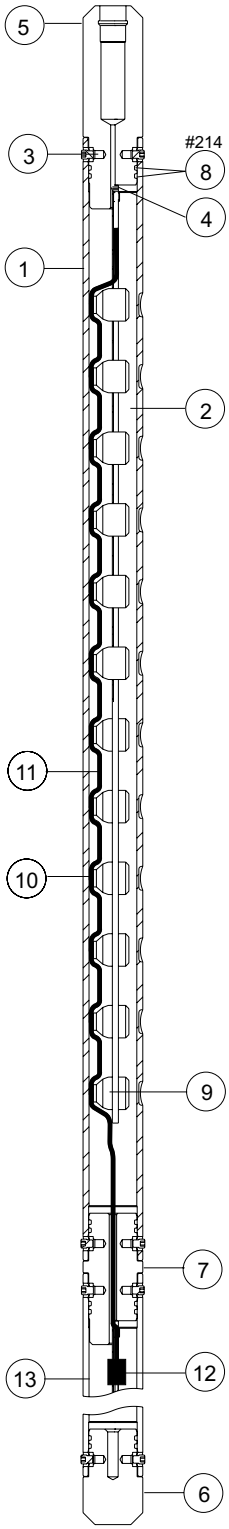

1 9/16-in. 4-spf 0°
Slip-On Tubing Puncher

1-9/16 in. 6-spf 0° Slip-On Tubing Puncher

Item	Description	Part No.
	Shipping Assembly - 4 ft	101247576
	Shipping Assembly - 7 ft	101247588
	Shipping Assembly - 11 ft	101247603
	Shipping Assembly - 15 ft	101247605
	Shipping Assembly - 21 ft	101247607
*1	Gun, Scallop - 4 ft	101291489
	Gun, Scallop - 7 ft	101291491
	Gun, Scallop - 11 ft	101291492
	Gun, Scallop - 15 ft	101291498
	Gun, Scallop - 21 ft	101291500
*2	Strip, Charge Holder - 4 ft	101291521
	Strip, Charge Holder - 7 ft	102191529
	Strip, Charge Holder - 11 ft	101291530
	Strip, Charge Holder - 15 ft	101291531
	Strip, Charge Holder - 21 ft	101291532
*3	Screw, Cap 0.25” D x 0.25” L	101265663
*4	Screw, Cap 0.25” D x 0.375” L	101265579
5	Firing Head - GO™ Style	101274746
6	Bull Plug	101250245
7	Tandem, Grooved	101247486
8	O-Ring, Buna 90 Duro #214	100001949
	O-Ring, Viton 95 Duro #214	100003922
9	Charge - 1 9/16-in. HMX Alum, 2.5 gm	100005306
	Charge -1 9/16-in. HMX P/M cu, 2.6 gm	100000139
**10	Charge Clip	101275254
11	Detonating Cord (40 Flat Recommended)	See Appendix A
12	Detonator, Electric	See Det. Section
13	Blast Sleeve	101305303

*Included in Shipping Assembly
**Charge clips must be ordered separately
N/S - Not shown

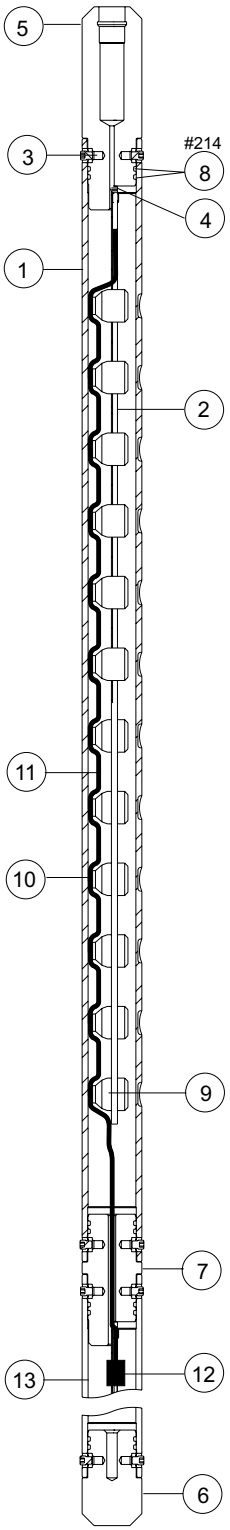

1 9/16-in. 6-spf 0° Slip-On Tubing Puncher

2-in. 4-spf 0° Slip-On Tubing Puncher

Item	Description	Part No.
	Shipping Assembly - 4 ft	101246430
	Shipping Assembly - 7 ft	101246451
	Shipping Assembly - 11 ft	101246452
	Shipping Assembly - 15 ft	101246453
	Shipping Assembly - 21 ft	101246454
*1	Gun, Scallop - 4 ft	101246235
	Gun, Scallop - 7 ft	101246238
	Gun, Scallop - 11 ft	101246241
	Gun, Scallop - 15 ft	101246242
	Gun, Scallop - 21 ft	101246243
*2	Strip, Charge Tube Holder - 4 ft	101246437
	Strip, Charge Tube Holder - 7 ft	101246445
	Strip, Charge Tube Holder - 11 ft	101246447
	Strip, Charge Tube Holder - 15 ft	101246448
	Strip, Charge Tube Holder - 21 ft	101246449
*3	Screw, Cap 0.313” D x 0.25” L	101265837
*4	Screw, Cap 0.25” D x 0.375” L	101265579
5	Firing Head - GO™ Style	101274748
6	Bull Plug	101246531
7	Tandem	101246532
8	O-Ring, #220 Buna, 90 Duro	100007757
	O-Ring, #220 Viton, 95 Duro	100064831
9	Charge - 2-in. HMX, Alum, 6.5 gm	100014486
**10	Charge Clip	101276127
11	Detonating Cord (40 Flat Recommended)	See Appendix A
12	Detonating Cord	See Det. Section
13	Blast Sleeve	101305310

*Included in Shipping Assembly
**Charge clips must be ordered separately
N/S - Not shown

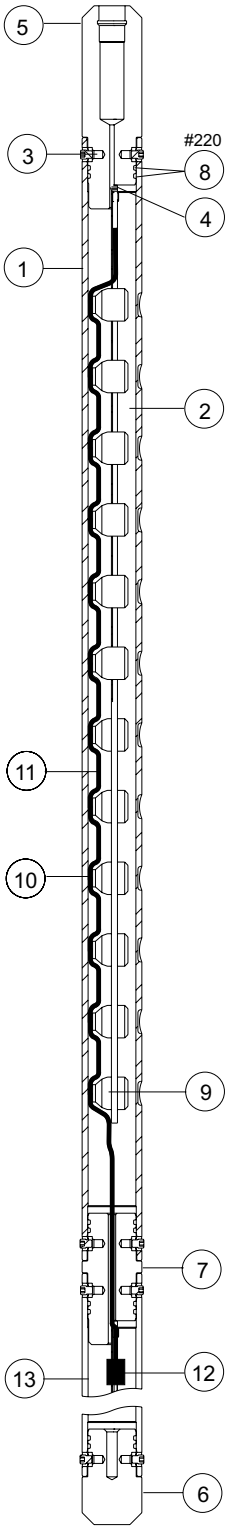

2-in. 4-spf 0° Slip-On Tubing Puncher

2-in. 6-spf 0° Slip-On Tubing Puncher

Item	Description	Part No.
	Shipping Assembly - 4 ft	101246474
	Shipping Assembly - 7 ft	101246476
	Shipping Assembly - 11ft	101246477
	Shipping Assembly - 15 ft	101246478
	Shipping Assembly - 21 ft	101246479

*1	Gun, Scallop - 4 ft	101291627
	Gun, Scallop - 7 ft	101291636
	Gun, Scallop - 11ft	101291637
	Gun, Scallop - 15 ft	101291638
	Gun, Scallop - 21 ft	101291639
*2	Strip, Charge Holder - 4 ft	101291628
	Strip, Charge Holder - 7 ft	101291629
	Strip, Charge Holder - 11 ft	101291631
	Strip, Charge Holder - 15 ft	101291632
	Strip, Charge Holder - 21 ft	101291634
*3	Screw, Cap 0.313” D x 0.25” L	101265837
*4	Screw, Cap 0.25” D x 0.375” L	101265579
5	Firing Head - GO™ Style	101274748
6	Bull Plug	101246531
7	Tandem	101246532
8	O-Ring, #220 Buna, 90 Duro	100007757
	O-Ring, #220 Vitron, 95 Duro	100064831
9	Charge - 2-in. HMX, Alum, 6.5 gm	100014486
**10	Charge Clip	101276127
11	Detonating Cord (40 Flat Recommended)	See Appendix A
12	Detonator, Electric	See Det. Section
13	Blast Sleeve	101305310

*Included in Shipping Assembly
**Charge clips must be ordered separately
N/S - Not shown

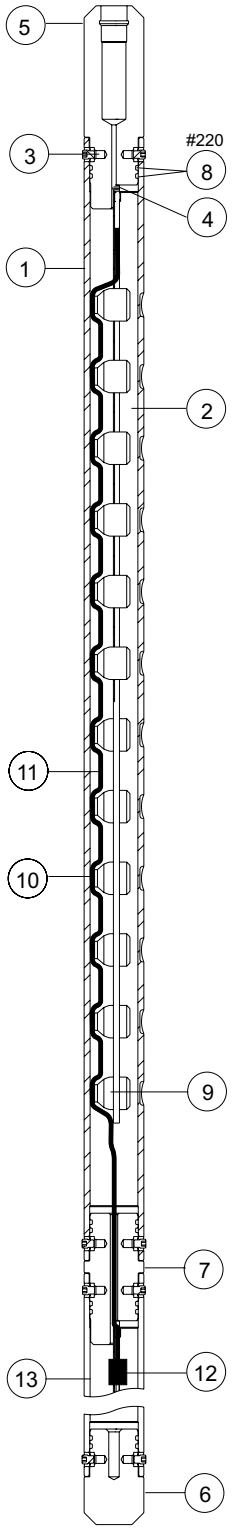

2-in. 6-spf 0° Slip-On Tubing Puncher

1 9/16 in. 4-spf 60° Slip-On Tube-Type

Item	Description	Part No.
	Shipping Assembly - 4 ft	101294583
	Shipping Assembly - 7 ft	101294584
	Shipping Assembly - 11 ft	101294585
	Shipping Assembly - 15 ft	101294586
	Shipping Assembly - 21 ft	101294587
*1	Gun, Scallop - 4 ft	101294588
	Gun, Scallop - 7 ft	101294589
	Gun, Scallop - 11 ft	101294590
	Gun, Scallop - 15 ft	101294591
	Gun, Scallop - 21 ft	101294592
*2	Tube, Charge Holder - 4 ft	101279482
	Tube, Charge Holder - 7 ft	101279483
	Tube, Charge Holder - 11 ft	101279484
	Tube, Charge Holder - 15 ft	101279485
	Tube, Charge Holder - 21 ft	101279486
*3	Strip, Charge Tube Mounting	101247208
*4	Screw, Cap 0.25" D x 0.25" L	101265663
*5	Screw, Cap 0.25" D x 0.375" L	101265579
6	Bull Plug	101250245
7	Tandem, Grooved	101247486
8	Firing Head Crossover - GO™ Style	101274746
9	O-Ring, Buna 90 Duro #214	100001949
	O-Ring, Viton 95 Duro #214	100003922
10	Charge - 3.5 g ***MILLENNIUM***™ HMX	100157028
11	Detonating Cord	See Appendix A
12	Detonator, Electric	See Det. Section
13	Blast Sleeve	101305303
N/S	Rubber Grommet For 40g Flat	100000327

*Included in Shipping Assembly
N/S - Not shown

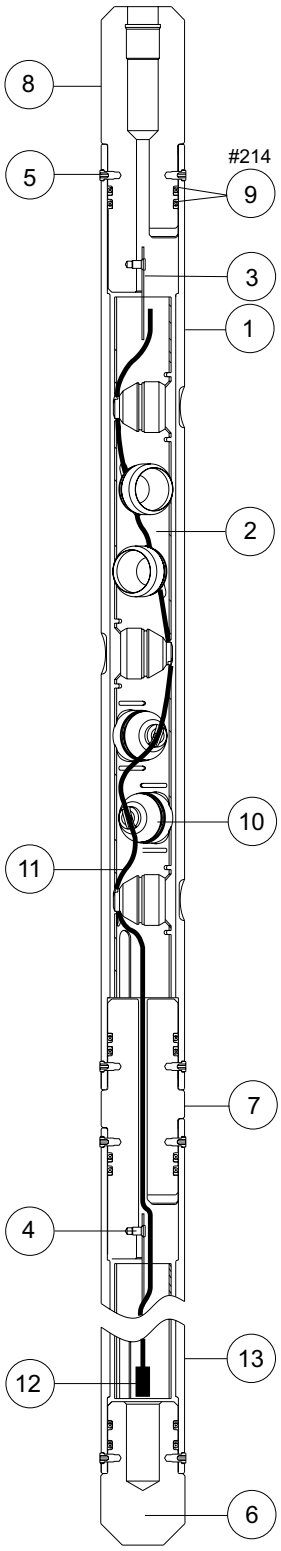

1 9/16-in. 4-spf 60° Slip-On Tube-Type

1 $^{9}/_{16}$-in. 4-spf 60° Slip-On Tube-Type

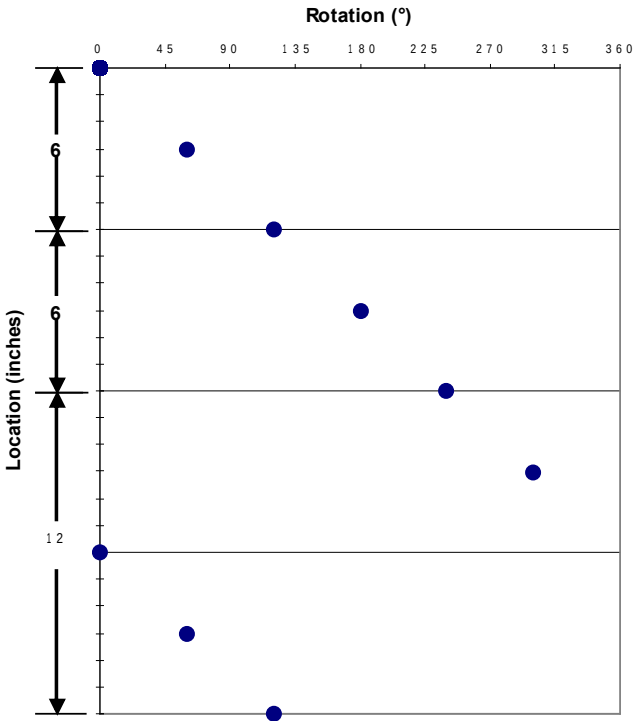

Shot Patterns for 1.5625-in.
4-spf 60° Phasing

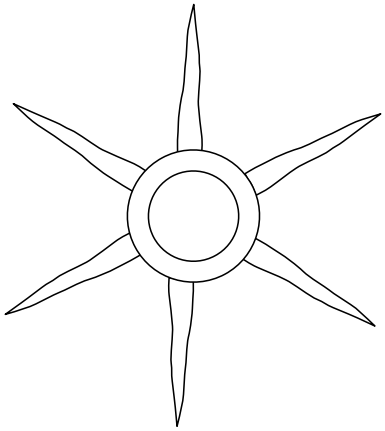

60° Phasing
6 Perforation Planes

JRC Gun Weights

Length ft (m)	4 (1.22)	7 (2.13)	11 (3.35)	15 (4.57)	21 (6.4)
Loaded lb (kg)	13 (6)	23 (10)	36 (16)	49 (22)	68 (31)
Spacer lb (kg)	10 (5)	17 (8)	27 (12)	37 (17)	52 (23)

1 9/16-in. 6-spf 60° Slip-On Tube-Type

Item	Description	Part No.
	Shipping Assembly - 4 ft	101294593
	Shipping Assembly - 7 ft	101294594
	Shipping Assembly - 11 ft	101294595
	Shipping Assembly - 15 ft	101294596
	Shipping Assembly - 21 ft	101294597
*1	Gun, Scallop - 4 ft	101294598
	Gun, Scallop - 7 ft	101294599
	Gun, Scallop - 11 ft	101294600
	Gun, Scallop - 15 ft	101294601
	Gun, Scallop - 21 ft	101294602
*2	Tube, Charge Holder - 4 ft	101235900
	Tube, Charge Holder - 7 ft	101235901
	Tube, Charge Holder - 11 ft	101235902
	Tube, Charge Holder - 15 ft	101235903
	Tube, Charge Holder - 21 ft	101235904
*3	Strip, Charge Tube Mounting	101247208
*4	Screw, Cap 0.25" D x 0.25" L	101265663
*5	Screw, Cap 0.25" D x 0.375" L	101265579
6	Bull Plug	101250245
7	Tandem, Grooved	101247486
8	Firing Head Crossover - GO™ Style	101274746
9	O-Ring, Buna 90 Duro #214	100001949
	O-Ring, Viton 95 Duro #214	100003922
10	Charge - 3.5 g ***MILLENNIUM***™ HMX	100157028
11	Detonating Cord	See Appendix A
12	Detonator, Electric	See Det. Section
13	Blast Sleeve	101305303
N/S	Rubber Grommet for 40g Flat	100000327

*Included in Shipping Assembly
N/S - Not shown

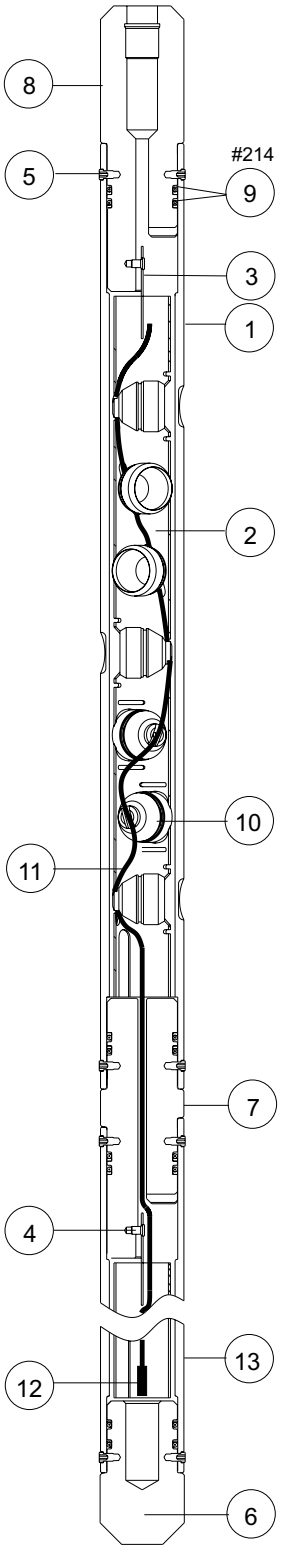

1 9/16-in. 6-spf 60° Slip-On Tube-Type

1 $^{9}/_{16}$-in. 6-spf 60° Slip-On Tube-Type

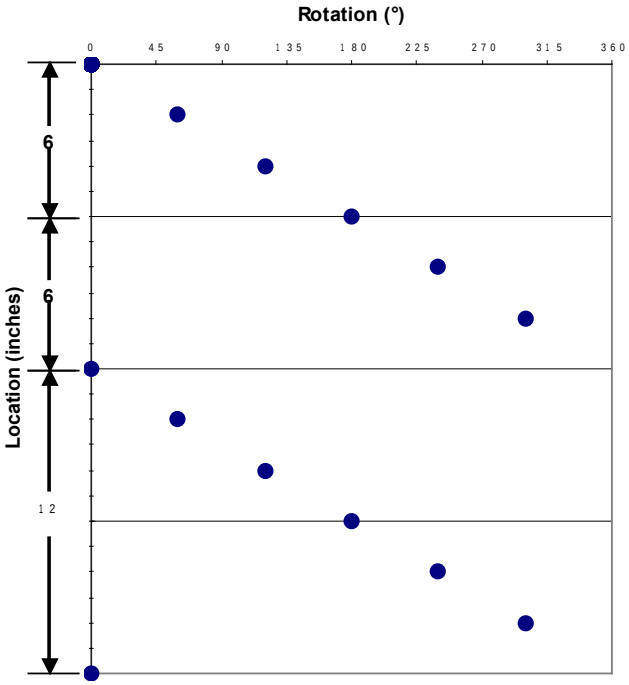

Shot Patterns for 1.5625-in.
6-spf 60° Phasing

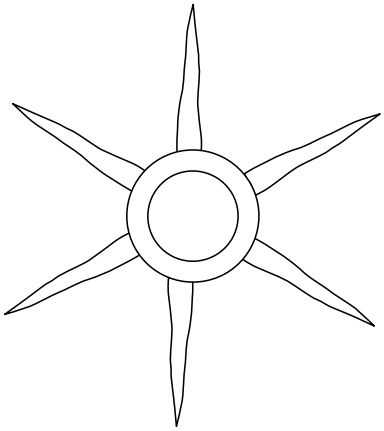

60° Phasing
6 Perforation Planes

JRC Gun Weights

Length ft (m)	4 (1.22)	7 (2.13)	11 (3.35)	15 (4.57)	21 (6.4)
Loaded lb (kg)	14 (6)	24 (11)	37 (17)	51 (23)	71 (32)
Spacer lb (kg)	10 (5)	17 (8)	27 (12)	37 (17)	52 (24)

1 9/16-in. 4-spf 0° Slip-On Strip-Type

Item	Description	Part No.
	Shipping Assembly - 4 ft	101247682
	Shipping Assembly - 7 ft	101247683
	Shipping Assembly - 11 ft	101247684
	Shipping Assembly - 15 ft	101247685
	Shipping Assembly - 21 ft	101247686
*1	Gun, Scallop - 4 ft	101247275
	Gun, Scallop - 7 ft	101247298
	Gun, Scallop - 11 ft	101247299
	Gun, Scallop - 15 ft	101247301
	Gun, Scallop - 21 ft	101247302
*2	Strip, Charge Holder - 4 ft	101247427
	Strip, Charge Holder - 7 ft	101247428
	Strip, Charge Holder - 11 ft	101247429
	Strip, Charge Holder - 15 ft	101247430
	Strip, Charge Holder - 21 ft	101247431
*3	Screw, Cap 0.25" D x 0.25" L	101265663
*4	Screw, Cap 0.25" D x 0.375" L	101265579
5	Firing Head - GO™ Style	101274746
6	Bull Plug	101250245
7	Tandem, Grooved	101247486
8	O-Ring, Buna 90 Duro #214	100001949
	O-Ring, Viton 95 Duro #214	100003922
9	Charge - 3.4 g ***MILLENNIUM***™ HMX	100157028
**10	Charge Clip	101275254
11	Detonating Cord	See Appendix A
12	Detonator, Electric	See Det. Section
13	Blast Sleeve	101305303
N/S	Rubber Grommet for 40g Flat	100000327

*Included in Shipping Assembly
**Charge clips must be ordered separately
N/S - Not shown

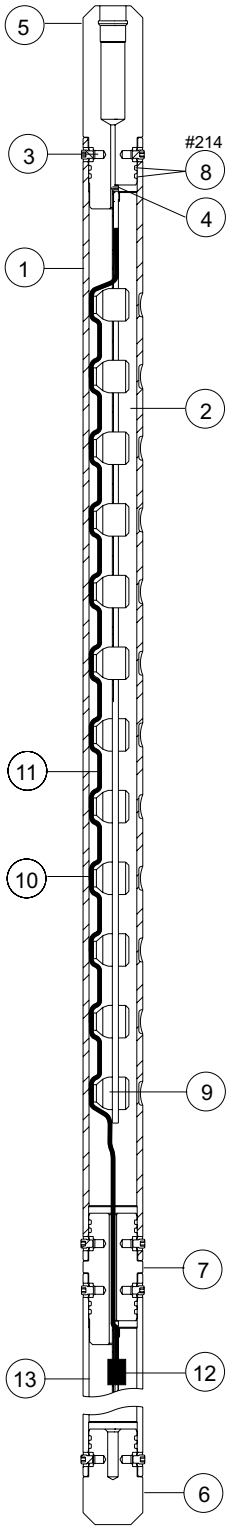

1 9/16-in. 4-spf 0° Slip-On Strip-Type

1 9/16-in. 4-spf 0° Slip-On Strip-Type

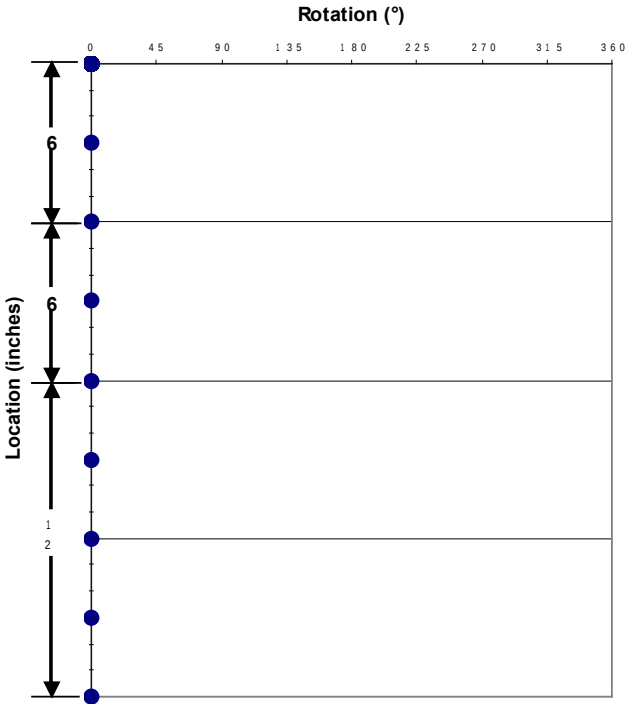

Shot Patterns for 1.5625-in.
4-spf 0° Phasing

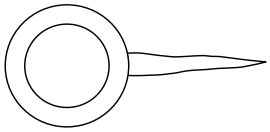

0° Phasing
1 Perforation Plane

JRC Gun Weights

Length ft (m)	4 (1.22)	7 (2.13)	11 (3.35)	15 (4.57)	21 (6.4)
Loaded lb (kg)	11 (5)	19 (9)	31 (14)	43 (19)	60 (27)
Spacer lb (kg)	9 (4)	17 (8)	26 (12)	36 (16)	51 (23)

1 9/16-in. 4-spf 180° Slip-On Strip-Type

Item	Description	Part No.
	Shipping Assembly - 4 ft	101249707
	Shipping Assembly - 7 ft	101249716
	Shipping Assembly - 11 ft	101249717
	Shipping Assembly - 15 ft	101249718
	Shipping Assembly - 21 ft	101249719
*1	Gun, Scallop - 4 ft	101249652
	Gun, Scallop - 7 ft	101249653
	Gun, Scallop - 11 ft	101249654
	Gun, Scallop - 15 ft	101249655
	Gun, Scallop - 21 ft	101249656
*2	Strip, Charge Holder - 4 ft	101235936
	Strip, Charge Holder - 7 ft	101235937
	Strip, Charge Holder - 11 ft	101235938
	Strip, Charge Holder - 15 ft	101235939
	Strip, Charge Holder - 21 ft	101235940
*3	Screw, Cap 0.25" D x 0.25" L	101265663
*4	Screw, Cap 0.25" D x 0.375" L	101265579
5	Firing Head - GO™ Style	101274746
6	Bull Plug	101250245
7	Tandem, Grooved	101247486
8	O-Ring, Buna 90 Duro #214	100001949
	O-Ring, Viton 95 Duro #214	100003922
9	Charge - 3.5 g ***MILLENNIUM***™ HMX	100157028
**10	Charge Clip	101275254
11	Detonating Cord	See Appendix A
12	Detonator, Electric	See Det. Section
13	Blast Sleeve	101305303
N/S	Rubber Grommet for 40g Flat	100000327

*Included in Shipping Assembly
**Charge clips must be ordered separately
N/S - Not shown

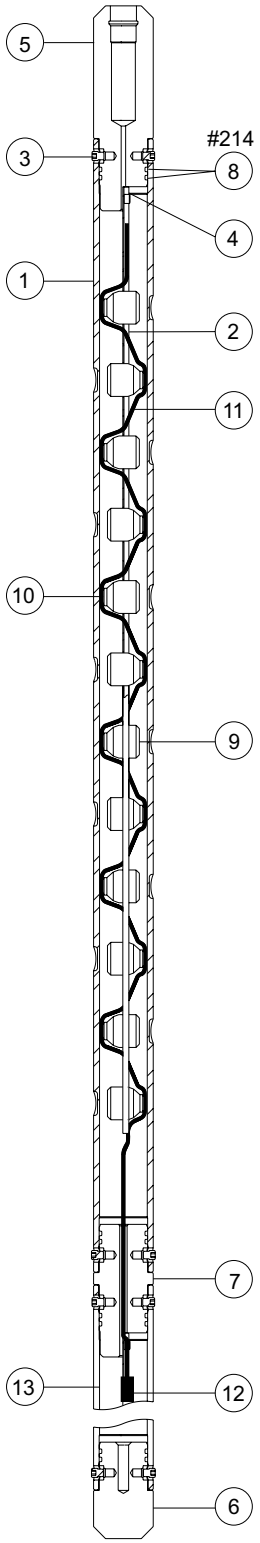

1 9/16-in. 4-spf 180° Slip-On Strip-Type

1 $^{9}/_{16}$-in. 4-spf 180° Slip-On Strip-Type

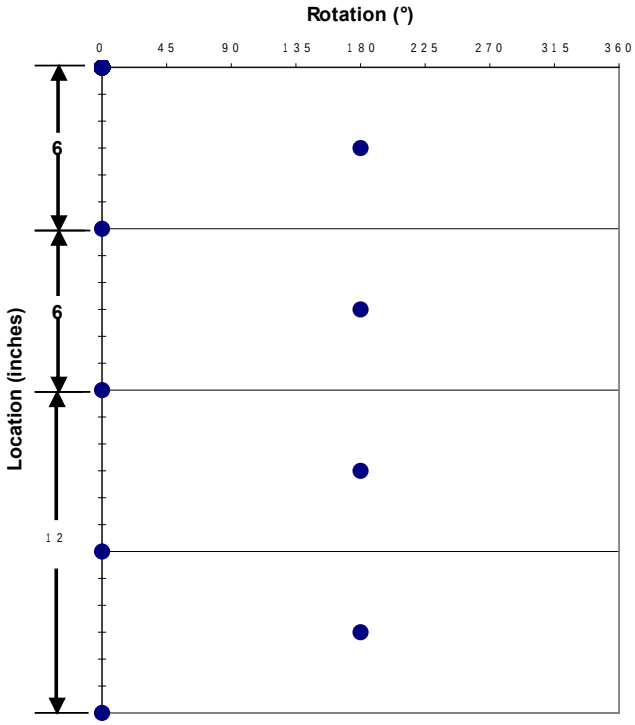

Shot Patterns for 1.5625-in.
4-spf 180° Phasing

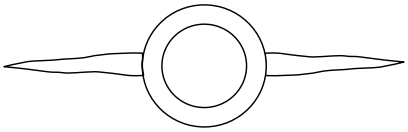

180° Phasing
2 Perforation Planes

JRC Gun Weights

Length ft (m)	4 (1.22)	7 (2.13)	11 (3.35)	15 (4.57)	21 (6.4)
Loaded lb (kg)	11 (5)	19 (9)	31 (14)	43 (19)	60 (27)
Spacer lb (kg)	9 (4)	17 (8)	26 (12)	36 (16)	51 (23)

1-9/16 in. 6-spf 0° Slip-On Strip-Type

Item	Description	Part No.
	Shipping Assembly - 4 ft	101247576
	Shipping Assembly - 7 ft	101247588
	Shipping Assembly - 11 ft	101247603
	Shipping Assembly - 15 ft	101247605
	Shipping Assembly - 21 ft	101247607
*1	Gun, Scallop - 4 ft	101291489
	Gun, Scallop - 7 ft	101291491
	Gun, Scallop - 11 ft	101291492
	Gun, Scallop - 15 ft	101291498
	Gun, Scallop - 21 ft	101291500
*2	Strip, Charge Holder - 4 ft	101291521
	Strip, Charge Holder - 7 ft	102191529
	Strip, Charge Holder - 11 ft	101291530
	Strip, Charge Holder - 15 ft	101291531
	Strip, Charge Holder - 21 ft	101291532
*3	Screw, Cap 0.25" D x 0.25" L	101265663
*4	Screw, Cap 0.25" D x 0.375" L	101265579
5	Firing Head - GO™ Style	101274746
6	Bull Plug	101250245
7	Tandem, Grooved	101247486
8	O-Ring, Buna 90 Duro #214	100001949
	O-Ring, Viton 95 Duro #214	100003922
9	Charge - 3.4 g ***MILLENNIUM***™ HMX	100157028
**10	Charge Clip	101275254
11	Detonating Cord	See Appendix A
12	Detonator, Electric	See Det. Section
13	Blast Sleeve	101305303
N/S	Rubber Grommet for 40g Flat	100000327

*Included in Shipping Assembly
**Charge clips must be ordered separately
N/S - Not shown

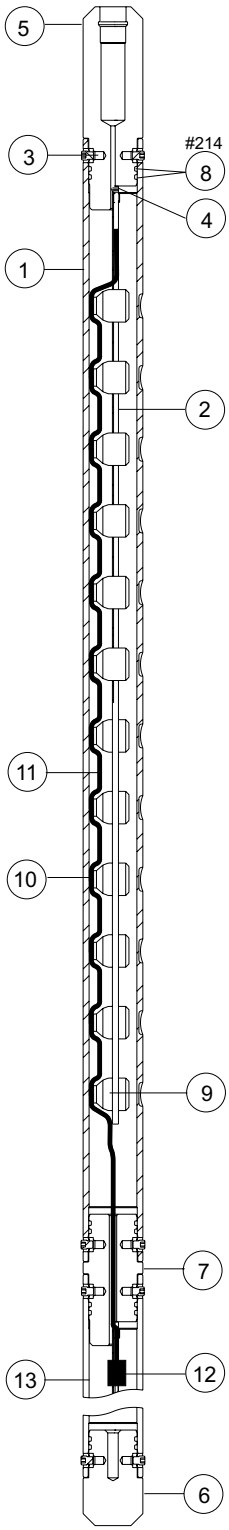

1 9/16-in. 6-spf 0° Slip-On Strip-Type

1 $^{9}/_{16}$-in. 6-spf 0° Slip-On Strip-Type

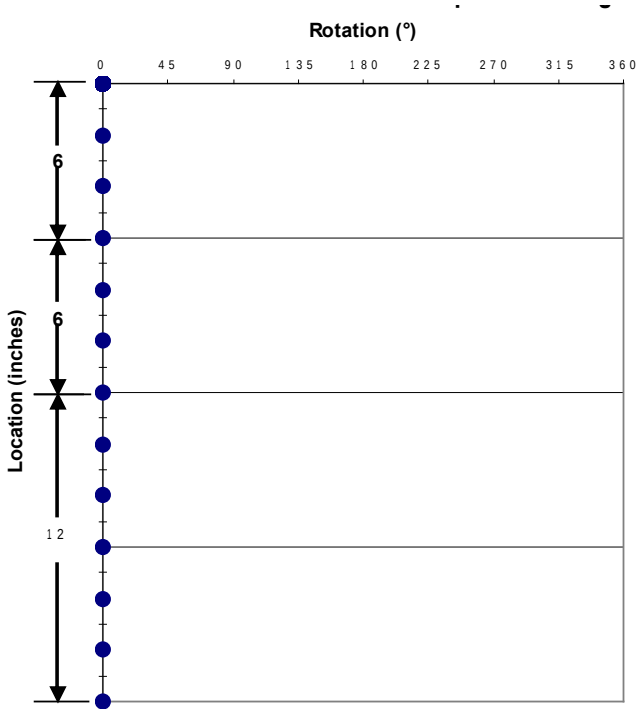

Shot Pattern for 1.5625-in.
6-spf 0° Phasing

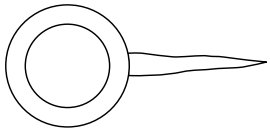

0° Phasing
1 Perforation Plane

JRC Gun Weights

Length ft (m)	4 (1.22)	7 (2.13)	11 (3.35)	15 (4.57)	21 (6.4)
Loaded lb (kg)	14 (6)	24 (11)	37 (17)	51 (23)	71 (32)
Spacer lb (kg)	10 (5)	17 (8)	27 (12)	37 (17)	52 (24)

1 9/16-in. 6-spf 180° Slip-On Strip-Type

Item	Description	Part No.
	Shipping Assembly - 4 ft	101249678
	Shipping Assembly - 7 ft	101249684
	Shipping Assembly - 11 ft	101249685
	Shipping Assembly - 15 ft	101249687
	Shipping Assembly - 21 ft	101249688
*1	Gun, Scallop - 4 ft	101291606
	Gun, Scallop - 7 ft	101291607
	Gun, Scallop - 11 ft	101291609
	Gun, Scallop -15 ft	101291612
	Gun, Scallop - 21 ft	101291618
*2	Strip, Charge Holder - 4 ft	101291521
	Strip, Charge Holder - 7 ft	101291529
	Strip, Charge Holder - 11 ft	101291609
	Strip, Charge Holder - 15 ft	101291531
	Strip, Charge Holder -21 ft	101291532
*3	Screw, Cap 0.25" D x 0.25" L	101265663
*4	Screw, Cap 0.25" D x 0.375" L	101264479
5	Firing Head - GO™ Style	101274746
6	Bull Plug	101250245
7	Tandem	101247486
8	O-Ring - Buna 90 Duro #214	100001949
	O-Ring - Viton 95 Duro #214	100003922
9	Charge - 3.4 g ***MILLENNIUM***™ HMX	100157028
**10	Charge Clip	101275254
11	Detonating Cord	See Appendix A
12	Detonator, Electric	See Det. Section
13	Blast Sleeve	101305303
N/S	Rubber Grommet for 40g Flat	100000327

*Included in Shipping Assembly
**Charge clips must be ordered separately
N/S - Not shown

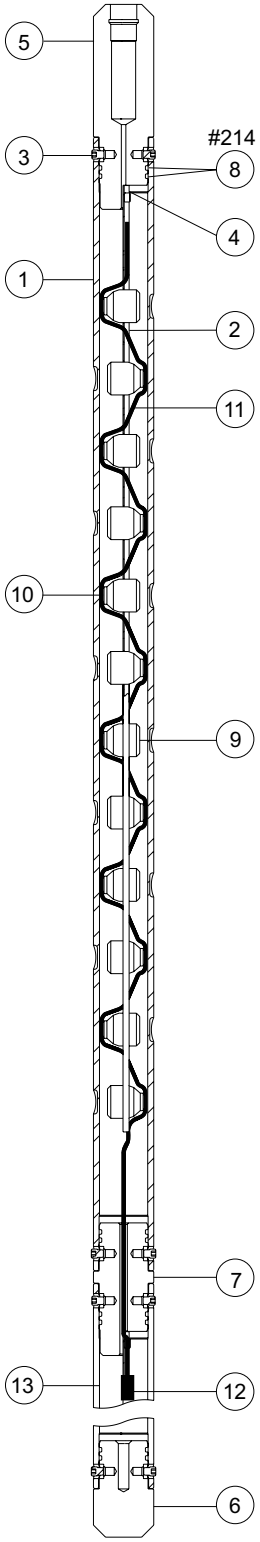

1 9/16-in. 6-spf 180° Slip-On Strip-Type

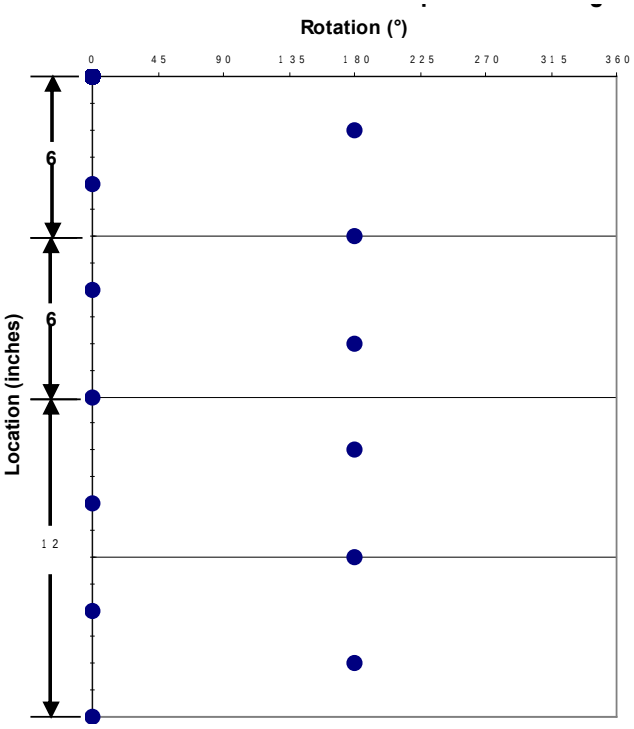

Shot Pattern for 1.5625-in.
6-spf 180° Phasing

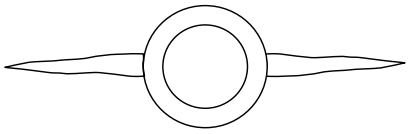

180° Phasing
2 Perforation Planes

JRC Gun Weights

Length ft (m)	4 (1.22)	7 (2.13)	11 (3.35)	15 (4.57)	21 (6.4)
Loaded lb (kg)	14 (6)	24 (11)	37 (17)	51 (23)	71 (32)
Spacer lb (kg)	10 (5)	17 (8)	27 (12)	37 (17)	52 (24)

2-in. 4-spf 60° Slip-On Tube-Type

Item	Description	Part No.
	Shipping Assembly - 4 ft	101294561
	Shipping Assembly - 7 ft	101294562
	Shipping Assembly - 11 ft	101294563
	Shipping Assembly - 15 ft	101294564
	Shipping Assembly - 21 ft	101294565
*1	Gun, Scallop - 4 ft	101294566
	Gun, Scallop - 7 ft	101294568
	Gun, Scallop - 11 ft	101294569
	Gun, Scallop - 15 ft	101294570
	Gun, Scallop - 21 ft	101294571
*2	Tube, Charge Holder - 4 ft	101279752
	Tube, Charge Holder - 7 ft	101279754
	Tube, Charge Holder - 11 ft	101279755
	Tube, Charge Holder - 15 ft	101279756
	Tube, Charge Holder - 21 ft	101279757
*3	Strip, Charge Tube Mounting	101246688
*4	Screw, Cap 0.313" D x 0.25" L	101265837
*5	Screw, Cap 0.25" D x 0.375" L	101265579
6	Bull Plug	101246531
7	Tandem, Grooved	101246532
8	Firing Head Crossover - GO™ Style	101274748
9	O-Ring, Buna 90 Duro #220	100007757
	O-Ring Viton 95 Duro #220	100064831
10	Charge - 6.8 g HMX ***Millennium***™	101208224
	Charge - 6.8g HMX SDP	100008017
	Charge - 6.8g HMX BH	101206246
	Charge - 6.9g HNS DP	100157018
11	Detonating Cord	See Appendix A
12	Detonator, Electric	See Det. Section
13	Blast Sleeve	101305310
N/S	Rubber Grommet for 40g Flat	100000327

*Included in Shipping Assembly
N/S - Not shown

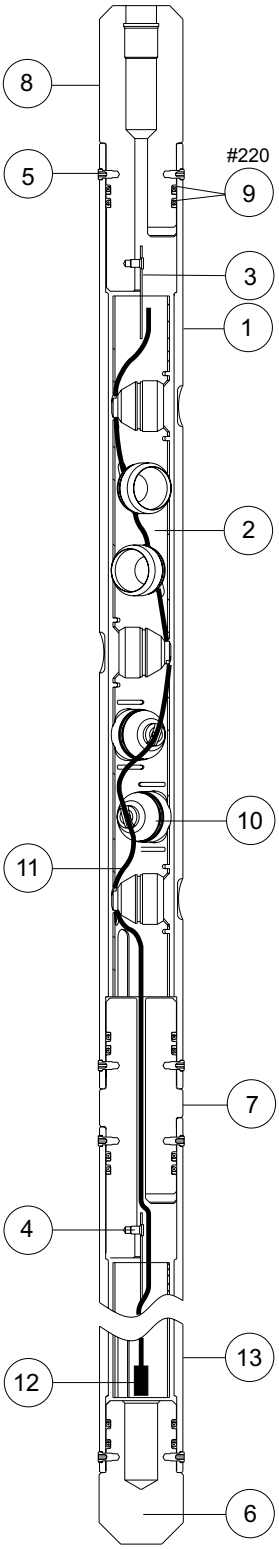

2-in. 4-spf 60° Slip-On Tube-Type

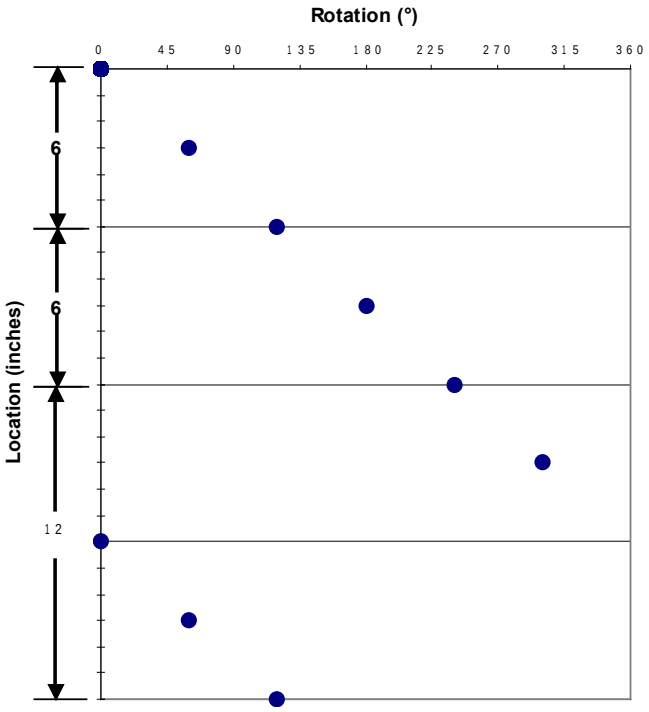

Shot Pattern for 2 -in.
4-spf 60° Phasing

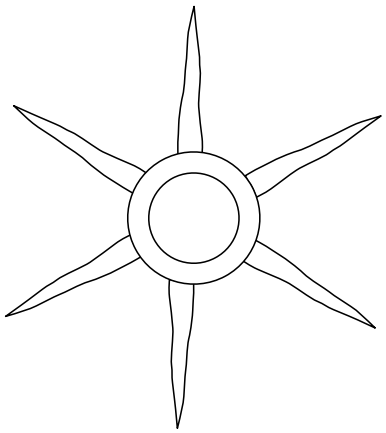

60° Phasing
6 Perforation Planes

JRC Gun Weights

Length ft (m)	4 (1.22)	7 (2.13)	11 (3.35)	15 (4.57)	21 (6.4)
Loaded lb (kg)	21 (9)	38 (17)	59 (27)	80 (36)	112 (51)
Spacer lb (kg)	16 (7)	27 (12)	44 (20)	60 (27)	84 (38)

2-in. 6-spf 60° Slip-On Tube-Type

Item	Description	Part No.
	Shipping Assembly - 4 ft	101294548
	Shipping Assembly - 7 ft	101294550
	Shipping Assembly - 11 ft	101294551
	Shipping Assembly - 15 ft	101294552
	Shipping Assembly - 21 ft	101294553
*1	Gun, Scallop - 4 ft	101294555
	Gun, Scallop - 7 ft	101294556
	Gun, Scallop - 11 ft	101294557
	Gun, Scallop - 15 ft	101294558
	Gun, Scallop - 21 ft	101294560
*2	Tube, Charge Holder - 4 ft	101234197
	Tube, Charge Holder - 7 ft	101234201
	Tube, Charge Holder - 11 ft	101234202
	Tube, Charge Holder - 15 ft	101235714
	Tube, Charge Holder - 21 ft	101234205
*3	Strip, Charge Tube Mounting	101246688
*4	Screw, Cap 0.313" D x 0.25" L	101265837
*5	Screw, Cap 0.25" D x 0.375" L	101265579
6	Bull Plug	101246531
7	Tandem, Grooved	101246532
8	Firing Head Crossover - GO™ Style	101274748
9	O-Ring, Buna 90 Duro #220	100007757
	O-Ring Viton 95 Duro #220	100064831
10	Charge - 6.8 g HMX ***Millennium™***	101208224
	Charge - 6.8 g HMX SDP	100008017
	Charge - 6.8 g HMX BH	101206246
	Charge - 6.9 g HNS DP	100157018
11	Detonating Cord	See Appendix A
12	Detonator, Electric	See Det. Section
13	Blast Sleeve	101305310
N/S	Rubber Grommet for 40g Flat	100000327

*Included in Shipping Assembly
N/S - Not shown

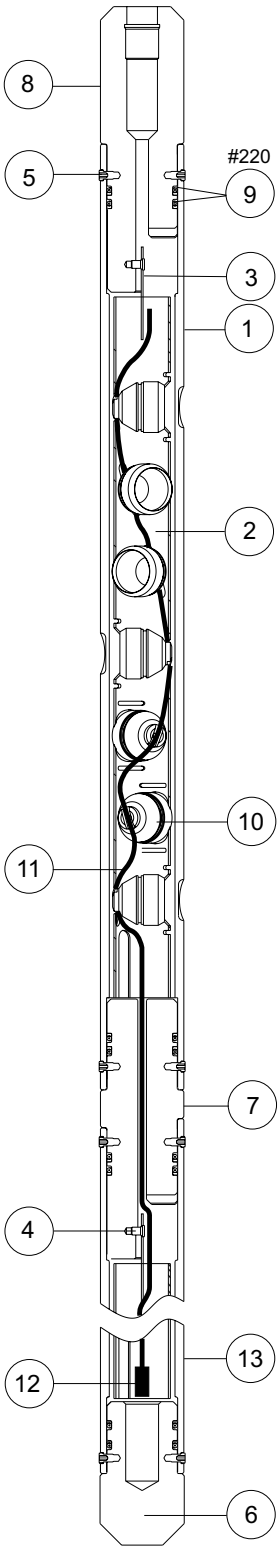

2-in. 6-spf 60° Slip-On Tube-Type

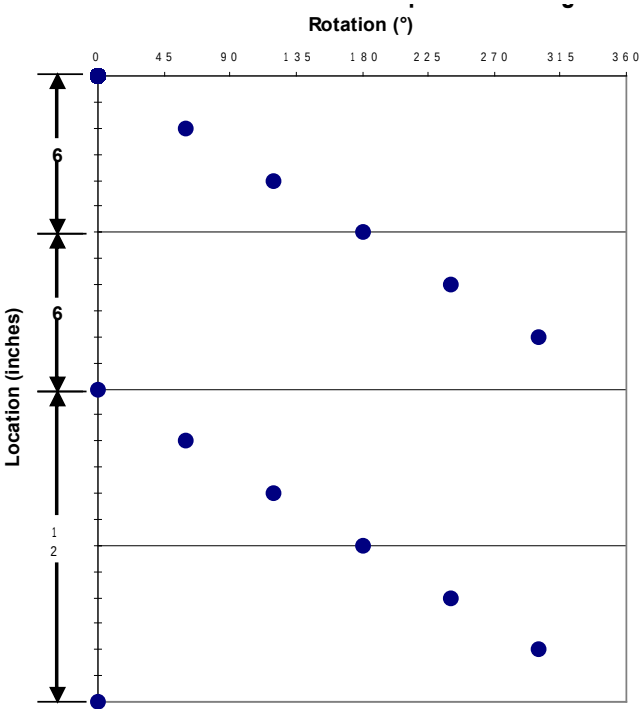

Shot Pattern for 2-in.
6-spf 60° Phasing

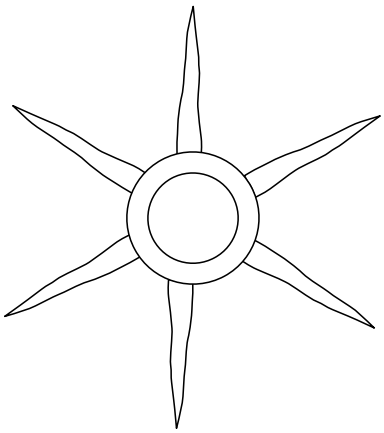

60° Phasing
6 Perforation Planes

JRC Gun Weights

Length ft (m)	4 (1.22)	7 (2.13)	11 (3.35)	15 (4.57)	21 (6.4)
Loaded lb (kg)	22 (10)	38 (17)	60 (27)	82 (37)	114 (52)
Spacer lb (kg)	15 (7)	26 (12)	42 (19)	57 (26)	79 (36)

2-in. 4-spf 0° Slip-On Strip Type

Item	Description	Part No.
	Shipping Assembly - 4 ft	101246430
	Shipping Assembly - 7 ft	101246451
	Shipping Assembly - 11 ft	101246452
	Shipping Assembly - 15 ft	101246453
	Shipping Assembly - 21 ft	101246454
*1	Gun, Scallop - 4 ft	101246235
	Gun, Scallop - 7 ft	101246238
	Gun, Scallop - 11 ft	101246241
	Gun, Scallop - 15 ft	101246242
	Gun, Scallop - 21 ft	101246243
*2	Strip, Charge Holder - 4 ft	101246437
	Strip, Charge Holder - 7 ft	101246445
	Strip, Charge Holder - 11 ft	101246447
	Strip, Charge Holder - 15 ft	101246448
	Strip, Charge Holder - 21 ft	101246449
*3	Screw, Cap 0.313" D x 0.25" L	101265837
*4	Screw, Cap 0.25" D x 0.375" L	101265579
5	Firing Head - GO™ Style	101274748
6	Bull Plug	101246531
7	Tandem	101246532
8	O-Ring, #220 Buna, 90 Duro	100007757
	O-Ring, #220 Viton, 95 Duro	100064831
9	Charge - 6.8 g HMX ***Millennium***™	101208224
	Charge - 6.8 g HMX SDP	100008017
	Charge - 6.8 g HMX BH	101206246
	Charge - 6.9 g HNS DP	100157018
**10	Charge Clip	101276127
11	Detonating Cord	See Appendix A
12	Detonator, Electric	See Det. Section
13	Blast Sleeve	101305310
N/S	Rubber Grommet for 40g Flat	100000327

*Included in Shipping Assembly.
**Charge clips must be ordered separately
N/S - Not shown

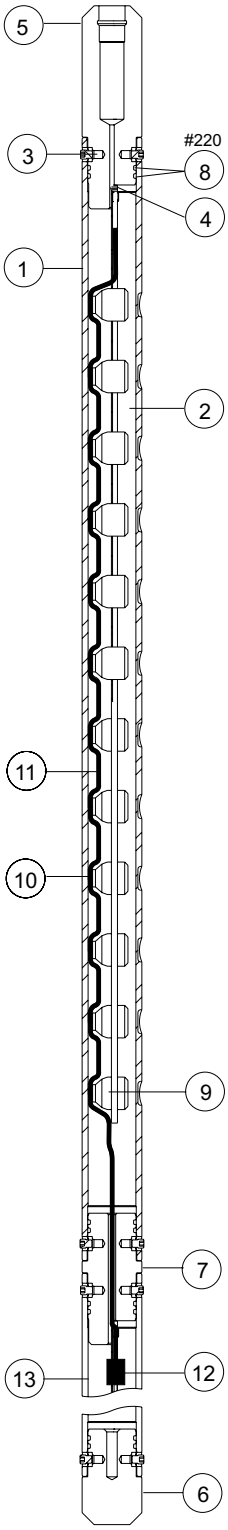

2-in. 4-spf 0° Slip-On Strip-Type

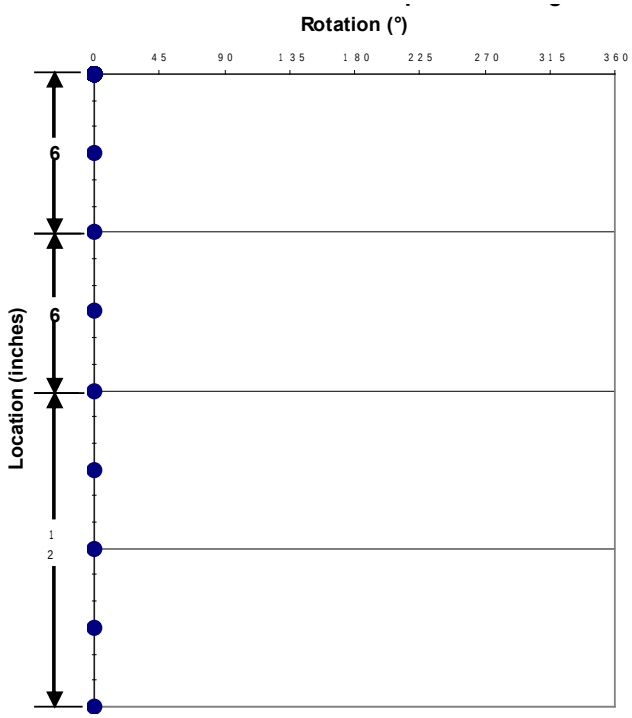

Shot Pattern for 2-in.
4-spf 0° Phasing

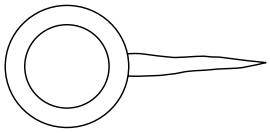

0° Phasing
1 Perforation Plane

JRC Gun Weights

Length ft (m)	4 (1.22)	7 (2.13)	11 (3.35)	15 (4.57)	21 (6.4)
Loaded lb (kg)	11 (5)	21 (9)	33 (15)	45 (21)	64 (29)
Spacer lb (kg)	9 (4)	17 (8)	26 (12)	36 (16)	51 (23)

2-in. 4-spf 180° Slip-On Strip Type

Item	Description	Part No.
	Shipping Assembly - 4 ft	101246597
	Shipping Assembly - 7 ft	101246598
	Shipping Assembly - 11 ft	101246599
	Shipping Assembly - 15 ft	101246600
	Shipping Assembly - 21 ft	101246601
*1	Gun, Scallop - 4 ft	101246541
	Gun, Scallop - 7 ft	101246542
	Gun, Scallop - 11 ft	101246543
	Gun, Scallop - 15 ft	101246544
	Gun, Scallop - 21 ft	101246545
*2	Strip, Charge Holder - 4 ft	101246437
	Strip, Charge Holder - 7 ft	101246445
	Strip, Charge Holder - 11 ft	101246447
	Strip, Charge Holder - 15 ft	101246448
	Strip, Charge Holder - 21 ft	101246449
*3	Screw, Cap 0.313" D x 0.25" L	101265837
*4	Screw, Cap 0.25" D x 0.375" L	101265579
5	Firing Head - Go™ Style	101274748
6	Bull Plug	101246531
7	Tandem	101246532
8	O-Ring, #220 Buna, 90 Duro	100007757
	O-Ring, #220 Viton, 95 Duro	100064831
9	Charge - 6.8 g HMX ***Millennium***™	101208224
	Charge - 6.8 g HMX SDP	100008017
	Charge - 6.8 g HMX BH	101206246
	Charge - 6.9 g HNS DP	100157018
**10	Charge Clip	101276127
11	Detonating Cord	See Appendix A
12	Detonator, Electric	See Det. Section
13	Blast Sleeve	101305310
N/S	Rubber Grommet for 40g Flat	100000327

*Included in Shipping Assembly
**Charge clips must be ordered separately
N/S - Not shown

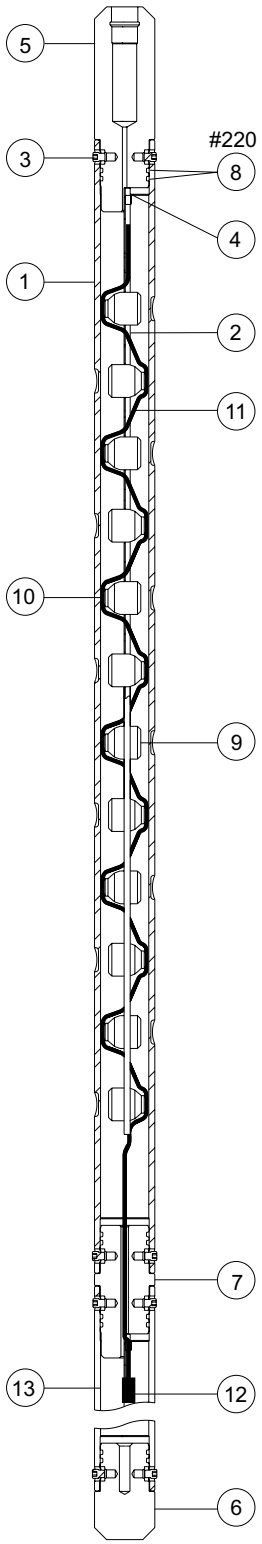

2-in. 4-spf 180° Slip-On Strip-Type

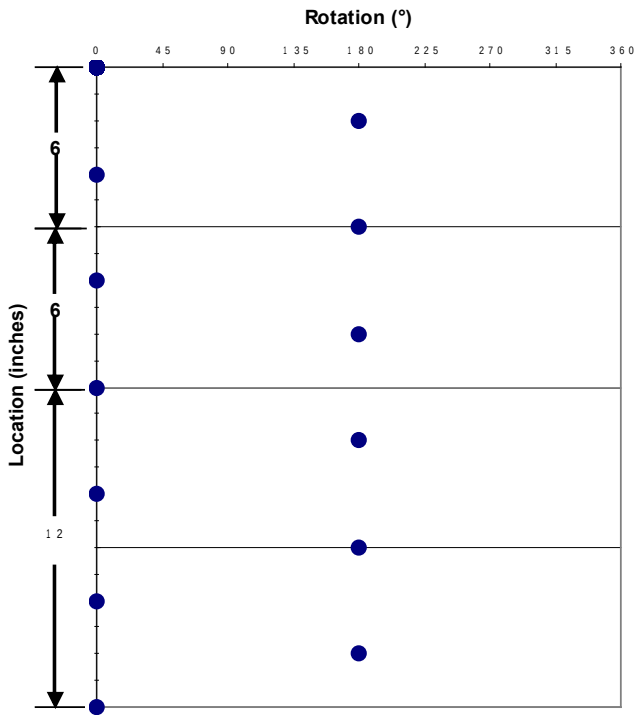

Shot Pattern for 2-in.
4-spf 180° Phasing

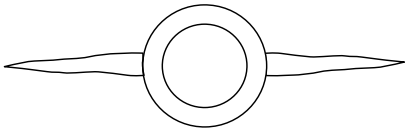

180° Phasing
2 Perforation Planes

JRC Gun Weights

Length ft (m)	4 (1.22)	7 (2.13)	11 (3.35)	15 (4.57)	21 (6.4)
Loaded lb (kg)	11 (5)	21 (9)	33 (15)	45 (21)	64 (29)
Spacer lb (kg)	9 (4)	17 (8)	26 (12)	36 (16)	51 (23)

2-in. 6-spf 0° Slip-On Strip-Type

Item	Description	Part No.
	Shipping Assembly - 4 ft	101246474
	Shipping Assembly - 7 ft	101246476
	Shipping Assembly - 11ft	101246477
	Shipping Assembly - 15 ft	101246478
	Shipping Assembly - 21 ft	101246479
*1	Gun, Scallop - 4 ft	101291627
	Gun, Scallop - 7 ft	101291636
	Gun, Scallop - 11ft	101291637
	Gun, Scallop - 15 ft	101291638
	Gun, Scallop - 21 ft	101291639
*2	Strip, Charge Holder - 4 ft	101291628
	Strip, Charge Holder - 7 ft	101291629
	Strip, Charge Holder - 11 ft	101291631
	Strip, Charge Holder - 15 ft	101291632
	Strip, Charge Holder - 21 ft	101291634
*3	Screw, Cap 0.313" D x 0.25" L	101265837
*4	Screw, Cap 0.25" D x 0.375" L	101265579
5	Firing Head - GO™ Style	101274748
6	Bull Plug	101246531
7	Tandem	101246532
8	O-Ring, #220 Buna, 90 Duro	100007757
	O-Ring, #220 Vitron, 95 Duro	100064831
9	Charge - 6.80g HMX ***Millennium***™	101208224
	Charge - 6.80g HMX SDP	100008017
	Charge - 6.80g HMX BH	101206246
	Charge - 6.90g HNS DP	100157018
**10	Charge Clip	101276127
11	Detonating Cord	See Appendix A
12	Detonator, Electric	See Det. Section
13	Blast Sleeve	101305310
N/S	Rubber Grommet for 40g Flat	100000327

*Included in Shipping Assembly
**Charge clips must be ordered separately
N/S - Not shown

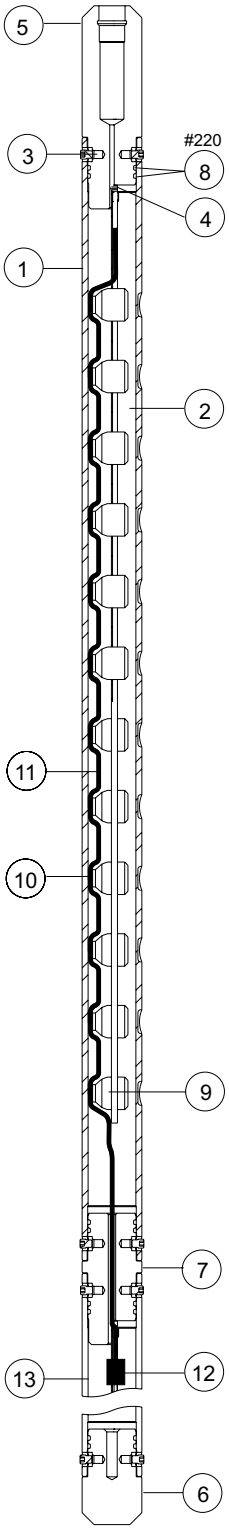

2-in. 6-spf 0° Slip-On Strip-Type

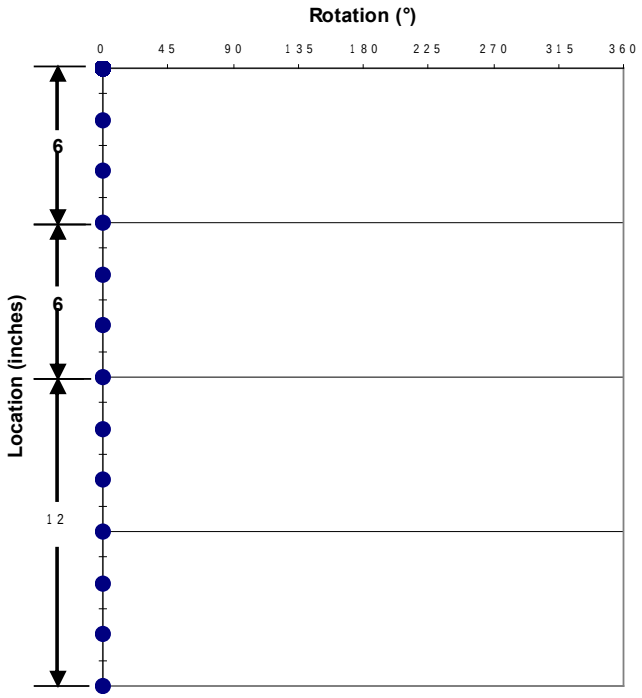

Shot Pattern for 2-in.
6-spf 0° Phasing

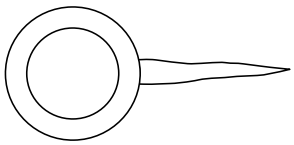

0° Phasing
1 Perforation Plane

JRC Gun Weights

Length ft (m)	4 (1.22)	7 (2.13)	11 (3.35)	15 (4.57)	21 (6.4)
Loaded lb (kg)	22 (10)	38 (17)	60 (27)	82 (37)	114 (52)
Spacer lb (kg)	15 (7)	26 (12)	42 (19)	57 (26)	79 (39)

2-in. 6-spf 180° Slip-On Strip-Type

Item	Description	Part No.
	Shipping Assembly - 4 ft	101246590
	Shipping Assembly - 7 ft	101246593
	Shipping Assembly - 11 ft	101246594
	Shipping Assembly - 15 ft	101246595
	Shipping Assembly - 21 ft	101246596
*1	Gun, Scallop - 4 ft	101291670
	Gun, Scallop - 7 ft	101291673
	Gun, Scallop - 11 ft	101291674
	Gun, Scallop - 15 ft	101291676
	Gun, Scallop - 21 ft	101291677
*2	Strip, Charge Holder - 4 ft	101291628
	Strip, Charge Holder - 7 ft	101291629
	Strip, Charge Holder - 11 ft	101291631
	Strip, Charge Holder - 15 ft	101291632
	Strip, Charge Holder - 21 ft	101291634
*3	Screw, Cap 0.313" D x 0.25" L	101265837
*4	Screw, Cap 0.25" D x 0.375" L	101265579
5	Firing Head - GO™ Style	101274748
6	Bull Plug	101246531
7	Tandem	101246532
8	O-Ring, #220 Buna, 90 Duro	100007757
	O-Ring, #220 Vitron, 95 Duro	100064831
9	Charge - 6.8g HMX ***Millennium***™	101208224
	Charge - 6.8g HMX SDP	100008017
	Charge - 6.8g HMX BH	101206246
	Charge - 6.9g HNS DP	100157018
**10	Charge Clip	101276127
11	Detonating Cord	See Appendix A
12	Detonator, Electric	See Det.Section
13	Blast Sleeve	101305310
N/S	Rubber Grommet for 40g Flat	100000327

*Included in Shipping Assembly
**Charge clips must be ordered separately
N/S - Not shown

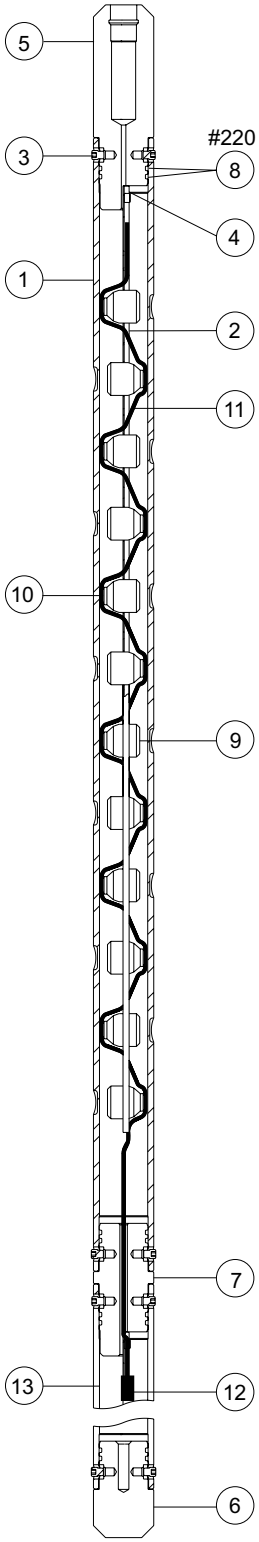

2-in. 6-spf 180°
Slip-On Strip-Type

2-in. 6-spf 180° Slip-On Strip-Type

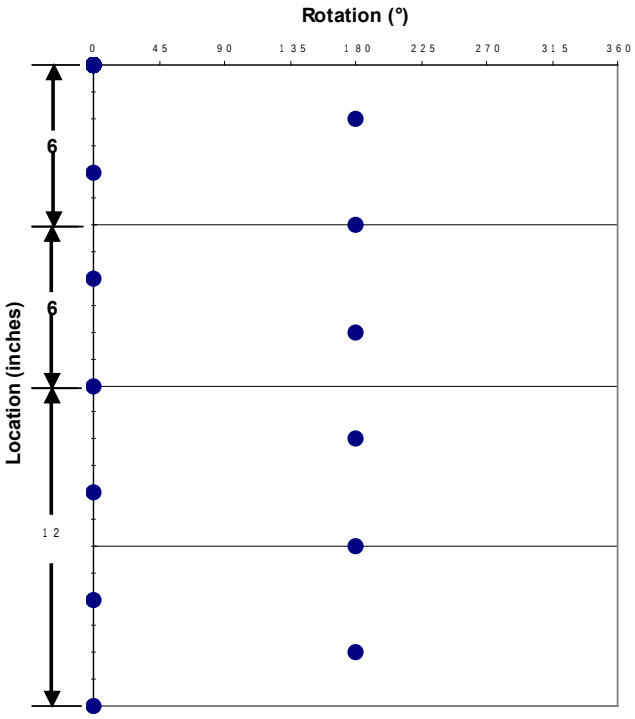

Shot Pattern for 2-in.
6-spf 180° Phasing

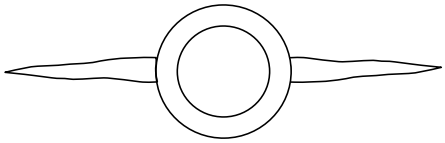

180° Phasing
2 Perforation Planes

JRC Gun Weights

Length ft (m)	4 (1.22)	7 (2.13)	11 (3.35)	15 (4.57)	21 (6.4)
Loaded lb (kg)	22 (10)	38 (17)	60 (27)	82 (37)	114 (52)
Spacer lb (kg)	15 (7)	26 (12)	42 (19)	57 (26)	79 (39)

2 1/2-in. 4-spf 60° Slip-On Tube-Type

Item	Description	Part No.
	Shipping Assembly - 4 ft	101294604
	Shipping Assembly - 7 ft	101294605
	Shipping Assembly - 11ft	101294606
	Shipping Assembly - 15 ft	101294607
	Shipping Assembly - 21 ft	101294608
1	Gun - Scallop - 4 ft	101294609
	Gun - Scallop - 7 ft	101294610
	Gun - Scallop - 11 ft	101294611
	Gun - Scallop - 15 ft	101294612
	Gun - Scallop - 21 ft	101294613
*2	Tube, Charge Holder - 4 ft	101280778
	Tube, Charge Holder - 7 ft	101280780
	Tube, Charge Holder - 11 ft	101280781
	Tube, Charge Holder - 15 ft	101280782
	Tube, Charge Holder - 21 ft	101280783
*3	Strip, Charge Tube Mounting	101250044
*4	Screw, Cap .25" D x .375" L	101265579
*5	Screw, Cap .375" D x .25" L	101265926
6	Bull Plug	101251099
7	Tandem, Grooved	101250189
8	Firing Head Crossover - GO™ Type	101274760
9	O-Ring, Buna 90 Duro #224	100001995
	O-Ring, Vitron 95 Duro #224	100007363
10	Charge - 11g RDX DP	100014493
	Charge - 11g HMX ***Millennium***™	101206251
11	Detonating Cord	See Appendix A
12	Detonator, Electric	See Det. Section
13	Blast Sleeve	100000257
N/S	Rubber Grommet for 40g Flat	100000327

*Included in Shipping Assembly
N/S - Not shown

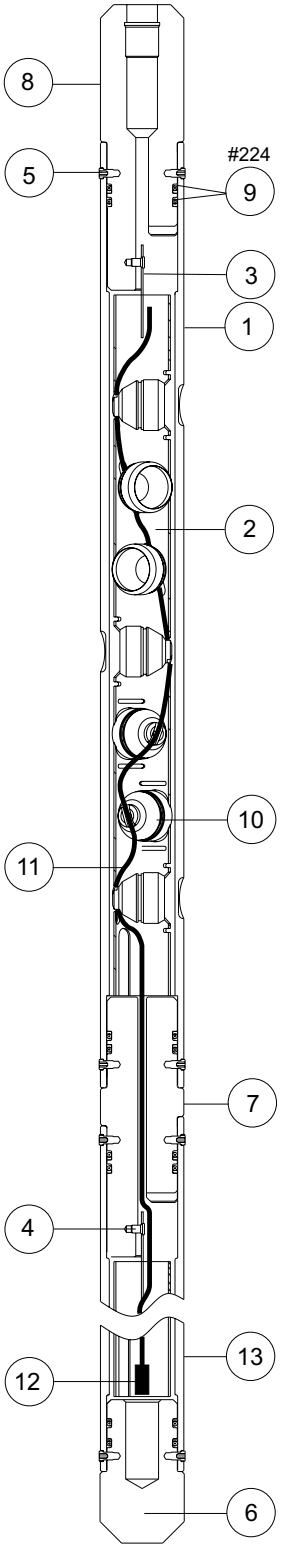

2 1/2-in. 4-spf 60° Slip-On Tube-Type

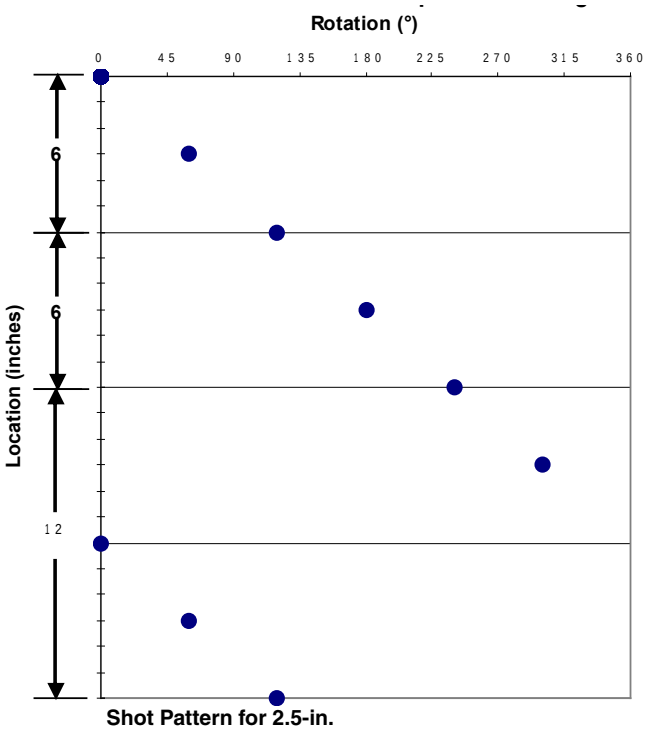

Shot Pattern for 2.5-in.
4-spf 60° Phasing

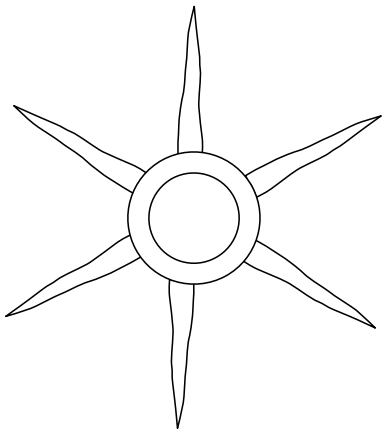

60° Phasing
6 Perforation Planes

JRC Gun Weights

Length ft (m)	4 (1.22)	7 (2.13)	11 (3.35)	15 (4.57)	21 (6.4)
Loaded lb (kg)	13 (6)	23 (10)	36 (16)	49 (22)	68 (31)
Spacer lb (kg)	10 (5)	17 (8)	27 (12)	37 (17)	52 (23)

2 1/2-in. 6-spf 60° Slip-On Tube-Type

Item	Description	Part No.
	Shipping Assembly - 4 ft	101294614
	Shipping Assembly - 7 ft	101294615
	Shipping Assembly - 11 ft	101294616
	Shipping Assembly - 15 ft	101294617
	Shipping Assembly - 21 ft	101294618
1	Gun - Scallop - 4 ft	101294619
	Gun - Scallop - 7 ft	101294620
	Gun - Scallop - 11 ft	101294621
	Gun - Scallop - 15 ft	101294622
	Gun - Scallop - 21 ft	101294623
*2	Tube, Charge Holder - 4 ft	101235733
	Tube, Charge Holder - 7 ft	101235734
	Tube, Charge Holder - 11ft	101235736
	Tube, Charge Holder - 15 ft	101235738
	Tube, Charge Holder - 21 ft	101235739
*3	Strip, Charge Tube Mounting	101250044
*4	Screw, Cap .25" D x .375" L	101265579
*5	Screw, Cap .375" D x .25" L	101265926
6	Bull Plug	101251099
7	Tandem, Grooved	101250189
8	Firing Head Crossover - GO™ Type	101274760
9	O-Ring, Buna 90 Duro #224	100001995
	O-Ring, Vitron 95 Duro #224	100007363
10	Charge - 11g RDX DP	100014493
	Charge - 11g HMX ***Millennium***™	101206251
11	Detonating Cord	See Appendix A
12	Detonator, Electric	See Det. Section
13	Blast Sleeve	100000257
N/S	Rubber Grommet for 40g Flat	100000327

*Included in Shipping Assembly
N/S - Not shown

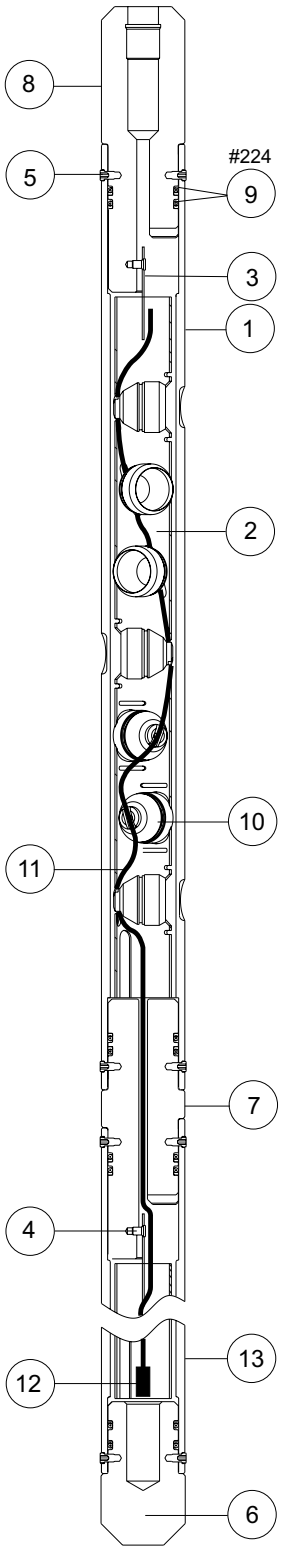

2 1/-in. 6-spf 60° Slip-On Tube-Type

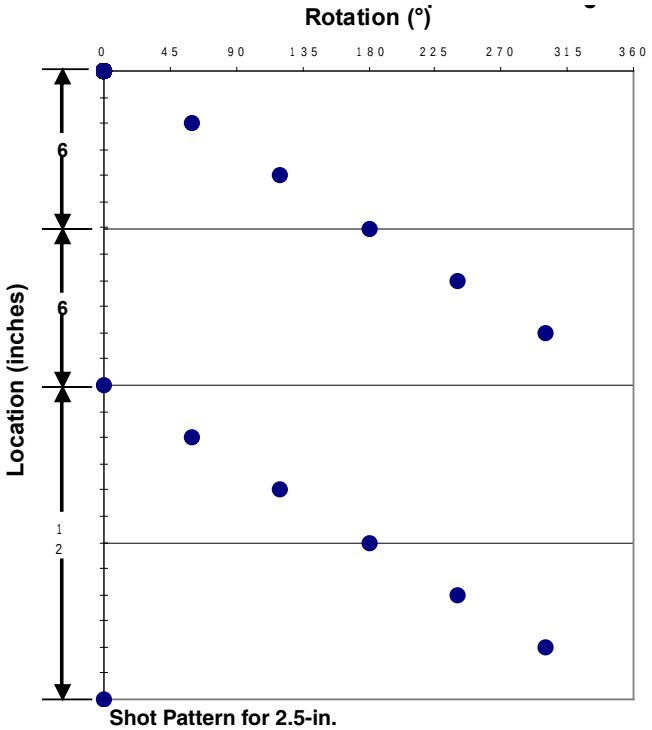

Shot Pattern for 2.5-in.
6-spf 60° Phasing

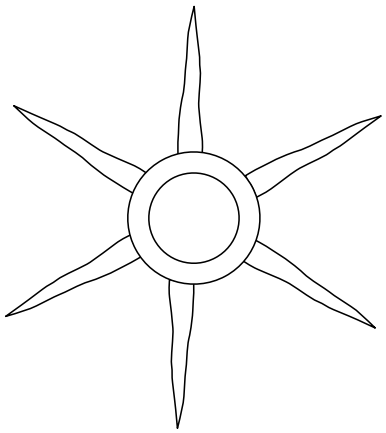

60° Phasing
6 Perforation Planes

JRC Gun Weights

Length ft (m)	4 (1.22)	7 (2.13)	11 (3.35)	15 (4.57)	21 (6.4)
Loaded lb (kg)	34 (15)	59 (27)	93 (42)	122 (55)	178 (81)
Spacer lb (kg)	23 (11)	41 (18)	64 (29)	87 (39)	122 (55)

2 $^{3}/_{8}$-in. 4-spf 60° Slip-On Tube-Type

Item	Description	Part No.
	Shipping Assembly - 4ft	101434489
	Shipping Assembly - 7ft	101434490
	Shipping Assembly - 11ft	101434491
	Shipping Assembly - 15ft	101434492
	Shipping Assembly - 21ft	101434493
1	Gun-Scalloped - 4 ft	101434495
	Gun-Scalloped - 7 ft	101434496
	Gun-Scalloped - 11 ft	101434497
	Gun-Scalloped - 15 ft	101434498
	Gun-Scalloped - 21 ft	101434499
*2	Tube - Charge Holder - 4 ft	101280778
	Tube - Charge Holder - 7ft	101280780
	Tube - Charge Holder - 11 ft	101280781
	Tube - Charge Holder - 15 ft	101280782
	Tube - Charge Holder - 21 ft	101280783
*3	Strip, Charge Tube Mounting	101250044
*4	Screw, Cap .25”D x .375”L	101265579
*5	Screw, Cap .375”D x .25”L	101265926
6	Bull Plug	101432950
7	Tandem, Grooved	101432952
8	Firing Head Crossover - GO®	101432951
9	O-Ring, Buna 90 Duro #224	100001995
	O-Ring, Viton 95 Duro #224	100007363
10	Charge - 11g RDX DP	100014493
	Charge - 11g HMX **Millennium™**	101206251
11	Detonating Cord	See Appendix A
12	Detonator, Electric	See Det. Section
13	Blast Sleeve	101432950

*Included in Shipping Assembly
N/S - Not shown

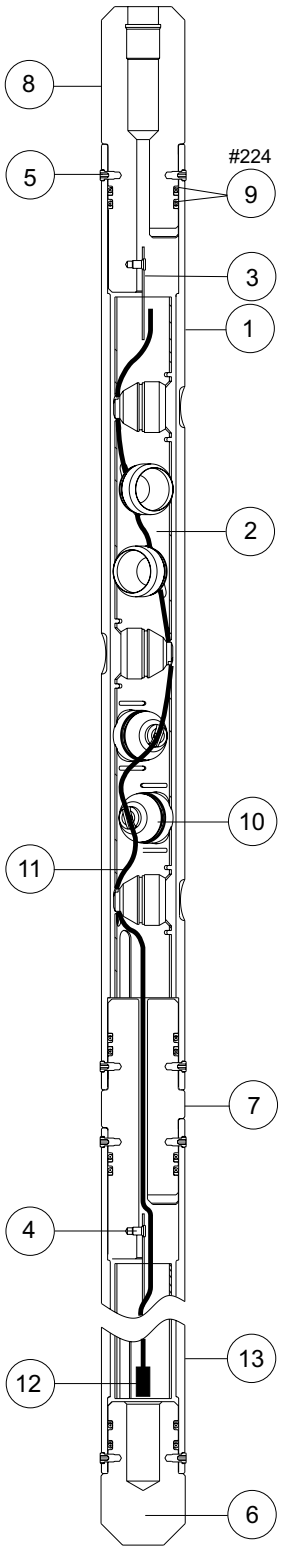

2 $^{3}/_{8}$-in. 4-spf 60° Slip-On Tube-Type

2 $^{3}/_{8}$-in. 4-spf 60° Slip-On Tube-Type

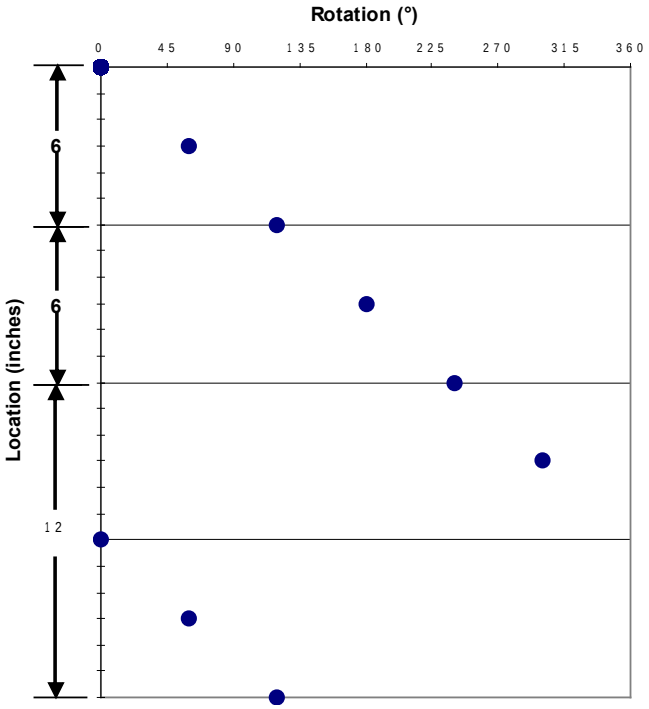

Shot Pattern for 2.375-in.
4-spf 60° Phasing

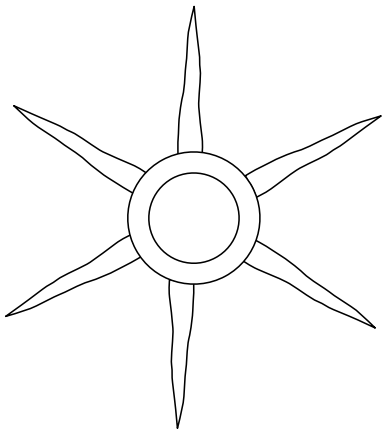

60° Phasing
6 Perforation Planes

JRC Gun Weights

Length ft (m)	4 (1.22)	7 (2.13)	11 (3.35)	15 (4.57)	21 (6.4)
Loaded lb (kg)	34 (15)	59 (27)	93 (42)	122 (55)	178 (81)
Spacer lb (kg)	23 (11)	41 (18)	64 (29)	87 (39)	122 (55)

2 3/8-in. 6-spf 60° Slip-On Tube-Type

Item	Description	Part No.
	Shipping Assembly - 4ft	101431535
	Shipping Assembly - 7ft	101431536
	Shipping Assembly - 11ft	101431537
	Shipping Assembly - 15ft	101431538
	Shipping Assembly - 21ft	101431539
1	Gun-Scalloped - 4 ft	101432922
	Gun-Scalloped - 7 ft	101432923
	Gun-Scalloped - 11 ft	101432924
	Gun-Scalloped - 15 ft	101432925
	Gun-Scalloped - 21 ft	101432926
*2	Tube - Charge Holder - 4 ft	101235733
	Tube - Charge Holder - 7ft	101235734
	Tube - Charge Holder - 11 ft	101235736
	Tube - Charge Holder - 15 ft	101235738
	Tube - Charge Holder - 21 ft	101235739
*3	Strip, Charge Tube Mounting	101250044
*4	Screw, Cap .25”D x .375”L	101265579
*5	Screw, Cap .375”D x .25”L	101265926
6	Bull Plug	101432950
7	Tandem	101432952
8	Firing Head Crossover - GO®	101432951
9	O-Ring, Buna 90 Duro #223	100001994
	O-Ring, Viton 95 Duro #223	100012309
10	Charge - 10g HMX BH	101591373
	Charge - 10g HMX **MAX FORCE™**	101590845
11	Detonating Cord	See Appendix A
12	Detonator, Electric	See Det. Section
13	Blast Sleeve	101432960
N/S	Rubber Grommet for 40g Flat cord	100000327

*Included in Shipping Assembly
N/S - Not shown

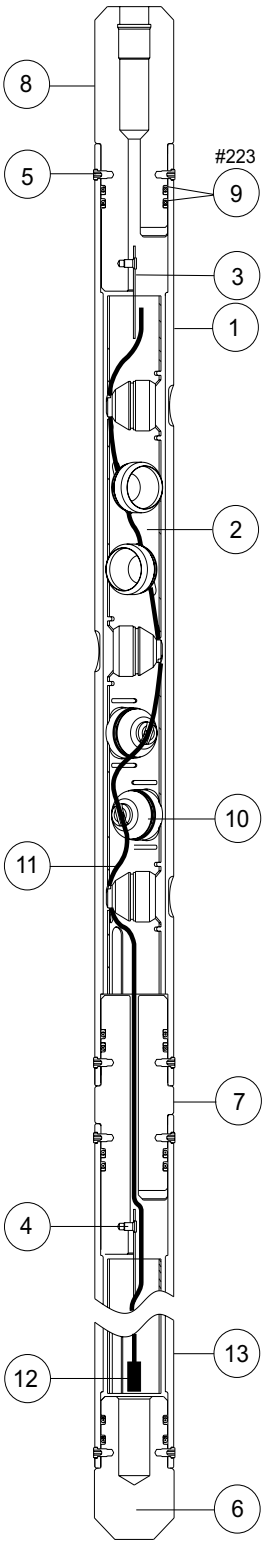

2 3/8-in. 6-spf 60° Slip-On Tube-Type

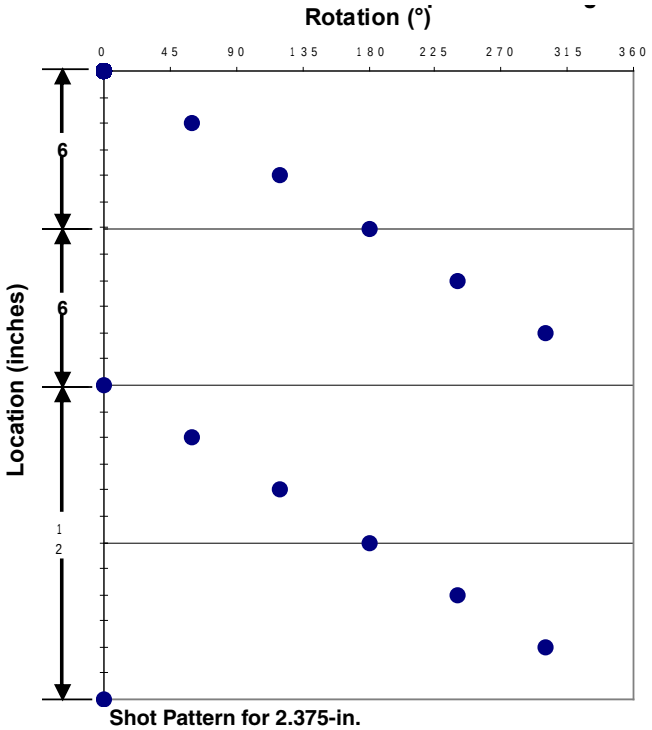

Shot Pattern for 2.375-in.
6-spf 60° Phasing

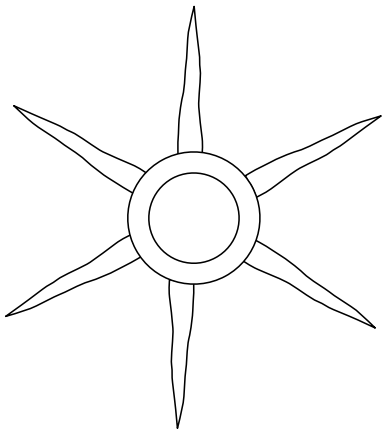

60° Phasing
6 Perforation Planes

JRC Gun Weights

Length ft (m)	4 (1.22)	7 (2.13)	11 (3.35)	15 (4.57)	21 (6.4)
Loaded lb (kg)	34 (15)	59 (27)	93 (42)	122 (55)	178 (81)
Spacer lb (kg)	23 (11)	41 (18)	64 (29)	87 (39)	122 (55)

2 1/2-in. 4-spf 0° Slip-On Strip-Type

Item	Description	Part No.
	Shipping Assembly - 4 ft	101251405
	Shipping Assembly - 7 ft	101251408
	Shipping Assembly - 11 ft	101251409
	Shipping Assembly - 15 ft	101251410
	Shipping Assembly - 21 ft	101251411
*1	Gun, Scallop - 4 ft	101249951
	Gun, Scallop - 7 ft	101249952
	Gun, Scallop - 11 ft	101249953
	Gun, Scallop - 15 ft	101249954
	Gun, Scallop - 21 ft	101249955
*2	Strip, Charge Holder - 4 ft	101250030
	Strip, Chareg Holder - 7 ft	101250032
	Strip, Charge Holder - 11 ft	101250033
	Strip, Charge Holder - 15 ft	101250034
	Strip, Charge Holder - 21 ft	101250035
*3	Screw, Cap .25" D x .375" L	101265579
*4	Screw, Cap .313" D x .25" L	101265837
5	Firing Head - GO™ Style	101274760
6	Bull Plug	101251099
7	Tandem	101250189
8	O-Ring, #224 Buna, 90 Duro	100001995
	O-Ring, #224 Vitron, 95 Duro	100007363
9	Charge - 11g HMX ***MILLENNIUM***™	101206251
**10	Charge Clip	101276707
11	Detonating Cord	See Appendix A
12	Detonator, Electric	See Det. Section
13	Blast Sleeve	100000257
N/S	Rubber Grommet for 40g Flat	100000327

*Included in Shipping Assembly
**Charge clips must be ordered separately
N/S - Not shown

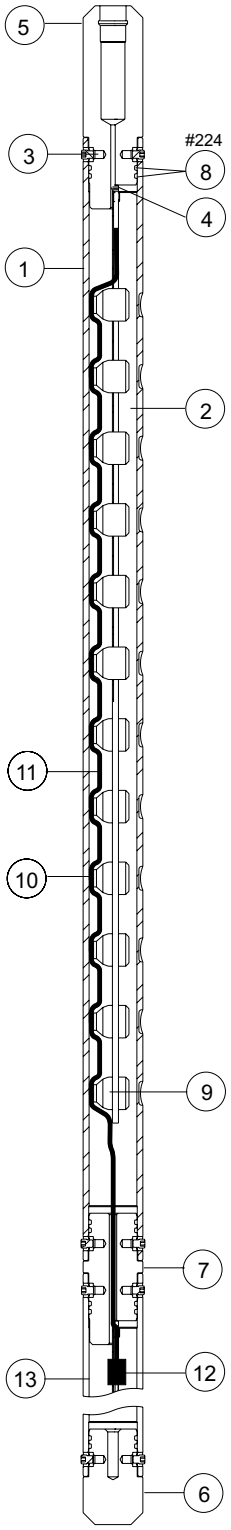

2 1/2-in. 4-spf 0° Slip-On Strip-Type

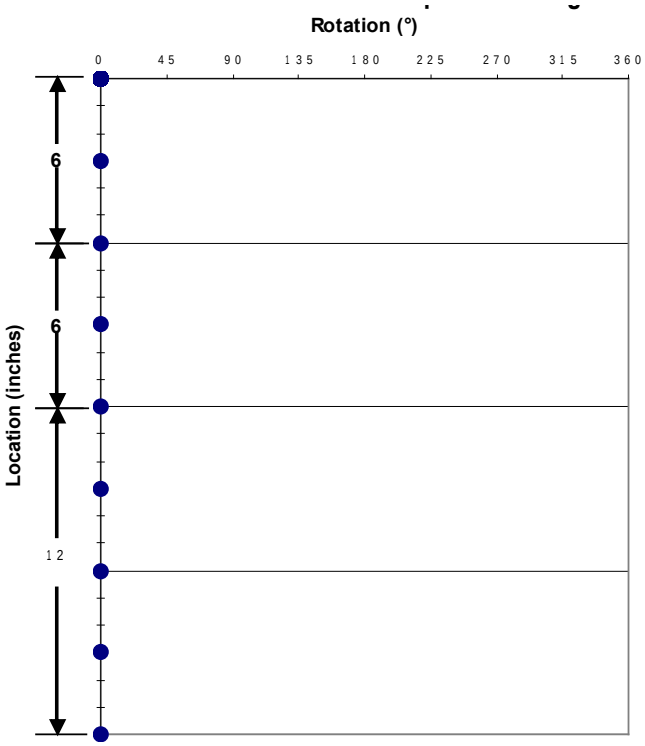

Shot Pattern for 2.5-in.
4-spf 0° Phasing

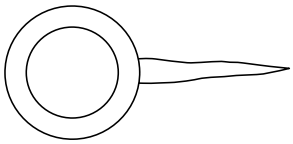

0° Phasing
1 Perforation Plane

JRC Gun Weights

Length ft (m)	4 (1.22)	7 (2.13)	11 (3.35)	15 (4.57)	21 (6.4)
Loaded lb (kg)	28 (13)	50 (23)	80 (36)	109 (50)	154 (70)
Spacer lb (kg)	23 (11)	40 (18)	64 (29)	87 (39)	122 (55)

2 1/2-in. 4-spf 180° Slip-On Strip-Type

Item	Description	Part No.
	Shipping Assembly - 4 ft	101251495
	Shipping Assembly - 7 ft	101251496
	Shipping Assembly - 11 ft	101251497
	Shipping Assembly - 15 ft	101251498
	Shipping Assembly - 21 ft	101251500
*1	Gun, Scallop - 4 ft	101251451
	Gun, Scallop - 7 ft	101251452
	Gun, Scallop - 11 ft	101251453
	Gun, Scallop - 15 ft	101251454
	Gun, Scallop - 21 ft	101251455
*2	Strip, Charge Holder - 4 ft	101250030
	Strip, Charge Holder - 7 ft	101250032
	Strip, Charge Holder - 11 ft	101250033
	Strip, Charge Holder - 15 ft	101250034
	Strip, Charge Holder - 21 ft	101250035
*3	Screw, Cap .25" D x .375" L	101265579
*4	Screw, Cap .313" D x .25" L	101265837
5	Firing Head Crossover - GO™ Style	101274760
6	Bull Plug	101251099
7	Tandem, Grooved	101250189
8	O-Ring, #224 Buna, 90 Duro	100001995
	O-Ring, #224 Viton, 95 Duro	100007363
9	Charge - 11g ***MILLENNIUM***™ HMX	101206251
**10	Charge Clip	101276707
11	Detonating Cord	See Appendix A
12	Detonator, Electric	See Det. Section
13	Blast Sleeve	100000257
N/S	Rubber Grommet for 40g Flat	100000327

*Included in Shipping Assembly
**Charge clips must be ordered separately
N/S - Not shown

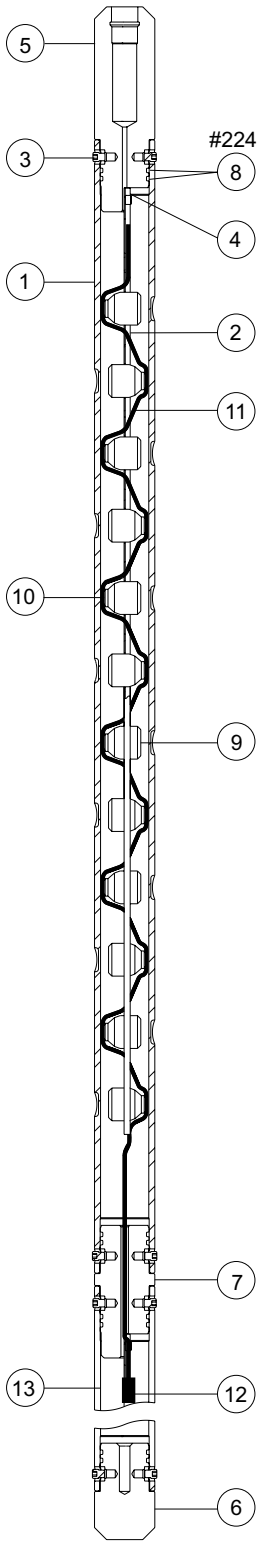

2 1/2-in. 4-spf 180° Slip-On Strip-Type

2 $^1/_2$-in. 4-spf 180° Slip-On Strip-Type

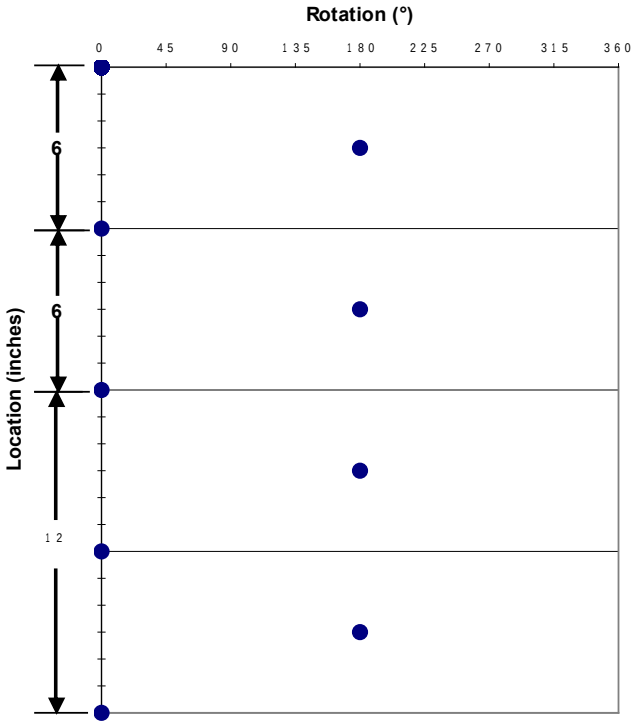

**Shot Pattern for 2.5-in.
4-spf 180° Phasing**

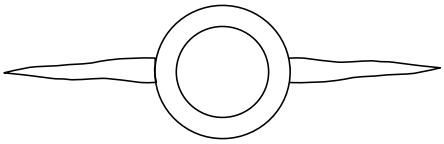

**180° Phasing
2 Perforation Planes**

JRC Gun Weights

Length ft (m)	4 (1.22)	7 (2.13)	11 (3.35)	15 (4.57)	21 (6.4)
Loaded lb (kg)	28 (13)	50 (23)	80 (36)	109 (50)	154 (70)
Spacer lb (kg)	23 (11)	40 (18)	64 (29)	87 (39)	122 (55)

1 9/16-in. 4-spf 0° Scalloped System

Item	Description	Part No.
	Shipping Assembly - 4 ft	101235924
	Shipping Assembly - 7 ft	101235926
	Shipping Assembly - 11 ft	101235927
	Shipping Assembly - 15 ft	101235928
	Shipping Assembly - 21 ft	101235929
*1	Gun, Scallop - 4 ft	101235911
	Gun, Scallop - 7 ft	101235913
	Gun, Scallop - 11ft	101235914
	Gun, Scallop - 15 ft	101235915
	Gun, Scallop - 21 ft	101235916
*2	Tube, Charge Holder - 4 ft	101235917
	Tube, Charge Holder - 7 ft	101235920
	Tube, Charge Holder - 11ft	101235921
	Tube, Charge Holder - 15 ft	101235922
	Tube, Charge Holder - 21ft	101235923
*3	Fixture, Alignment	101235706
*4	Snap Ring	101236795
*5	Screw, Flat Head #10-32 x 0.38" L	101263001
*6	Screw, Set #10-32 x 0.50" L	100028832
7	Firing Head Crossover - Vann™	100156707
8	Firing Head Crossover - GO® Style	101283107
9	Bull Plug	101235687
10	Tandem	101235679
11	O-Ring, Buna 90 Duro #215	100001937
	O-Ring, Viton 95 Duro #215	100064810
	O-Ring, Backup #215	101283230
12	O-Ring, Buna 90 Duro #218	100001951
	O-Ring, Viton 95 Duro #218	100064830
	O-Ring, Backup #218	101227694
*13	Kit, Booster Hardware	101232634
14	Charge - 3.4g ***MILLENNIUM***™ HMX	100157028
15	Detonating Cord	See Appendix A
16	Bi-Directional Booster	See Appendix A
17	**Teflon Grommet	100157596
18	Miniature Alignment Insert	100005277
19	End Seal	100005251

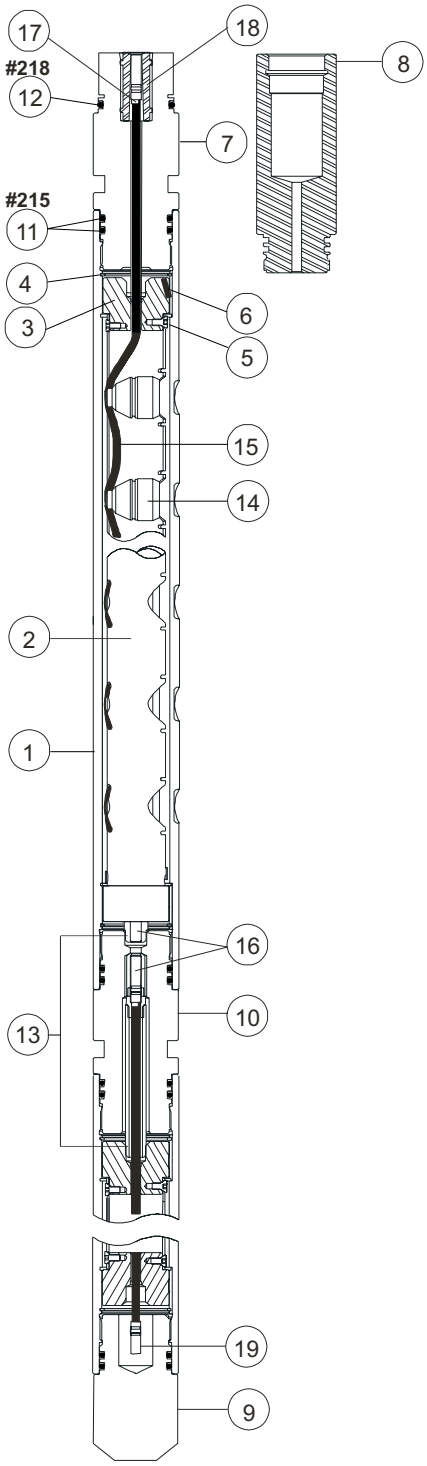

1 9/16 -in. 4-spf 0° Scalloped System

* Included in shipping assembly.
**Teflon is a trademark of E.I. Dupont De Nemours.

1 $^{9}/_{16}$-in. 4-spf 0° Scalloped System

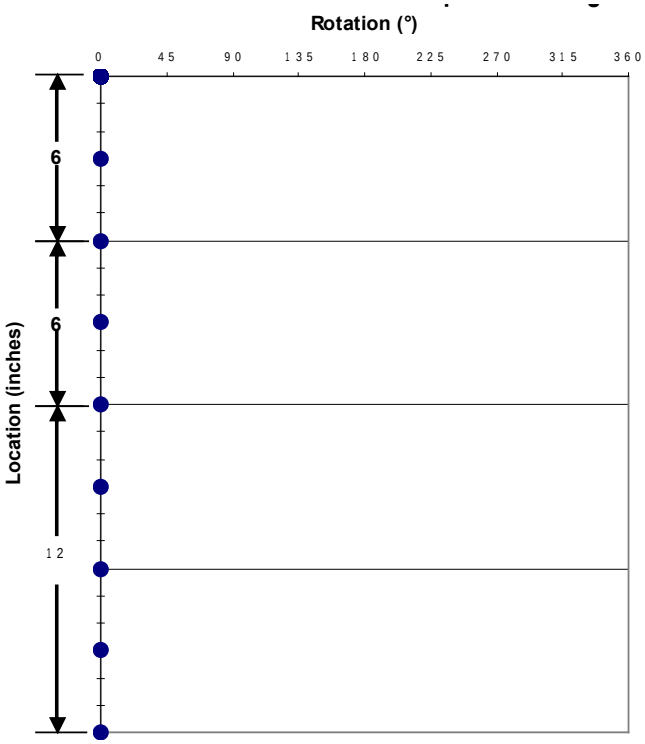

Shot pattern for 1.5625-in.
4-spf 0° Phasing

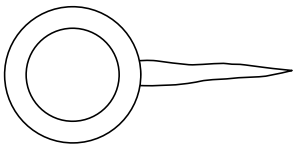

0° Phasing
1 Perforation Plane

JRC Gun Weights

Length ft (m)	4 (1.22)	7 (2.13)	11 (3.35)	15 (4.57)	21 (6.4)
Loaded lb (kg)	13 (6)	23 (10)	36 (16)	49 (22)	68 (31)
Spacer lb (kg)	10 (5)	17 (8)	27 (12)	37 (17)	52 (23)

1 9/16-in. 4-spf 60° Scalloped System

Item	Description	Part No.
	Shipping Assembly - 4ft	101235906
	Shipping Assembly - 7ft	101235907
	Shipping Assembly - 11ft	101235908
	Shipping Assembly - 15ft	101235909
	Shipping Assembly - 21ft	101235910

*1	Gun, Scallop - 4ft	101235895
	Gun, Scallop - 7ft	101235896
	Gun, Scallop - 11ft	101235897
	Gun, Scallop - 15ft	101235898
	Gun, Scallop - 21ft	101235899
*2	Tube, Charge Holder - 4ft	101235900
	Tube, Charge Holder - 7ft	101235901
	Tube, Charge Holder - 11ft	101235902
	Tube, Charge Holder - 15ft	101235903
	Tube, Charge Holder - 21ft	101235904
*3	Fixture, Alignment	101235706
*4	Snap Ring	101236795
*5	Screw, Flat Head #10-32 x 0.38" L	101263001
*6	Screw, Set #10 x 0.50" L	100028832
7	Firing Head Crossover - Vann	100156707
8	Firing Head Crossover - 'Go' Style	101283107
9	Bull Plug	101235687
10	Tandem, Grooved	101235679
11	O-Ring, Buna 90 Duro #215	100001937
	O-Ring, Viton 95 Duro #215	100064810
	O-Ring, Backup #215	101283230
12	O-Ring, Buna 90 Duro #218	100001951
	O-Ring, Viton 95 Duro #218	100064830
	O-Ring, Backup #218	101227694
*13	Kit, Booster Hardware	101232634
14	Charge - 3.4g HMX ***Millennium***®	100157028
15	Detonating Cord	See Appendix A
16	Detonator, Electric	See Det. Section
17	Teflon Grommet	100157596
18	Bi-Directional Booster	See Appendix A
19	End Seal	100005251
20	Alignment Insert	100005255

* Included in shipping assembly.
**Teflon is a trademark of E.I. Dupont De Nemours.

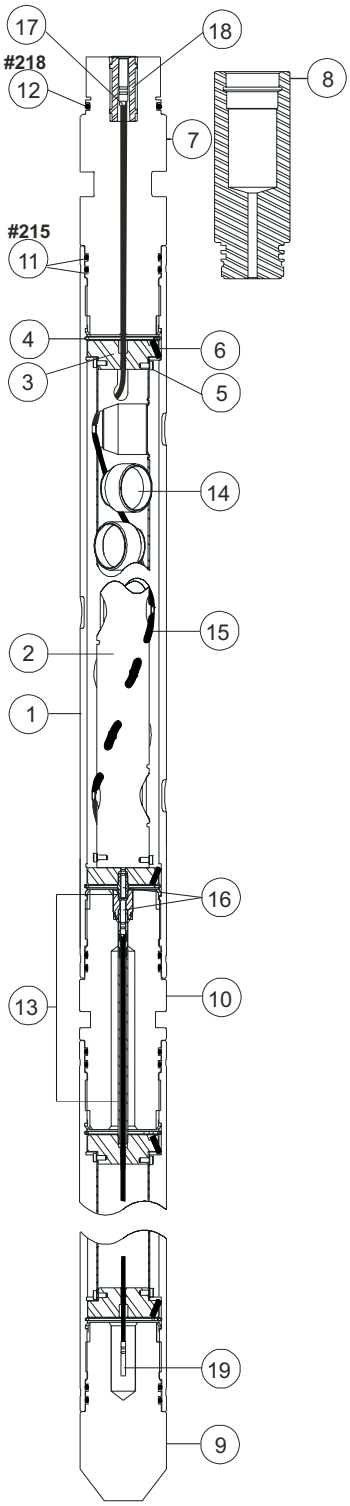

1 9/16-in. 4-spf 60° Scalloped System

1 $^{9}/_{16}$-in. 4-spf 60° Scalloped System

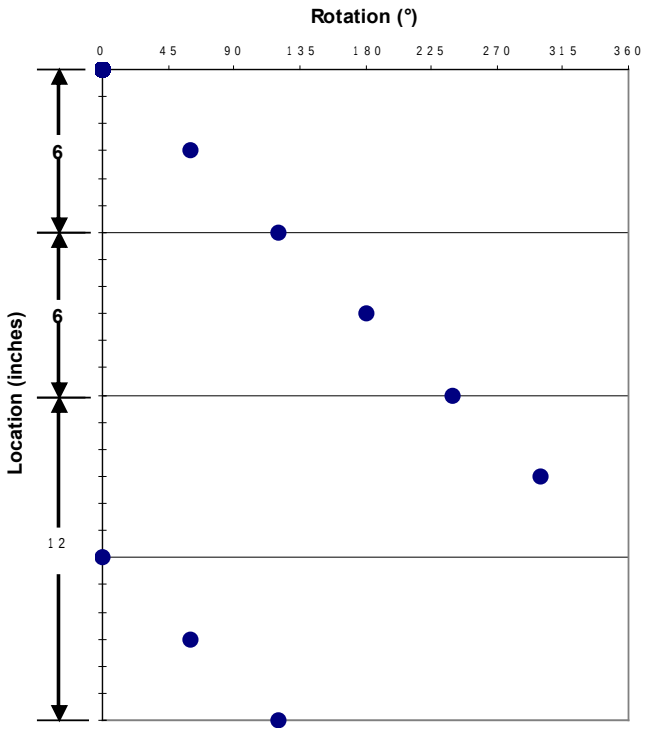

Shot Pattern for 1.5625-in.
4-spf 60° Phasing

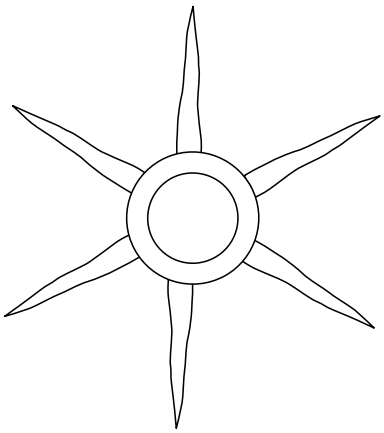

60° Phasing
6 Perforation Planes

JRC Gun Weights

Length ft (m)	4 (1.22)	7 (2.13)	11 (3.35)	15 (4.57)	21 (6.4)
Loaded lb (kg)	13 (6)	23 (10)	36 (16)	49 (22)	68 (31)
Spacer lb (kg)	10 (5)	17 (8)	27 (12)	37 (17)	52 (23)

1 9/16-in. 4-spf 90° Scalloped System

Item	Description	Part No.
	Shipping Assembly - 4ft	101280061
	Shipping Assembly - 7ft	101280062
	Shipping Assembly - 11ft	101280063
	Shipping Assembly - 15ft	101280060
	Shipping Assembly - 21ft	101280058
*1	Gun, Scallop - 4ft	101279419
	Gun, Scallop - 7ft	101279424
	Gun, Scallop - 11ft	101279425
	Gun, Scallop - 15ft	101279426
	Gun, Scallop - 21ft	101279428
*2	Tube, Charge Holder - 4ft	101279482
	Tube, Charge Holder - 7ft	101279483
	Tube, Charge Holder - 11ft	101279484
	Tube, Charge Holder - 15ft	101279485
	Tube, Charge Holder - 21ft	101279486
*3	Fixture, Alignment	101235706
*4	Snap Ring	101236795
*5	Screw, Flat Head #10-32 x 0.38" L	101263001
*6	Screw, Set #10 -32 x 0.50" L	100028832
7	Firing Head Crossover - Vann	100156707
8	Firing Head Crossover - 'Go' Style	101283107
9	Bull Plug	101235687
10	Tandem, Grooved	101235679
11	O-Ring, Buna 90 Duro #215	100001937
	O-Ring, Viton 95 Duro #215	100064810
	O-Ring, Backup #215	101283230
12	O-Ring, Buna 90 Duro #218	100001951
	O-Ring, Viton 95 Duro #218	100064830
	O-Ring, Backup #218	101227694
*13	Kit, Booster Hardware	101232634
14	Charge - 3.4g ***MILLENNIUM***® HMX	100157028
15	Detonating Cord	See Appendix A
16	Detonator, Electric	See Det. Section
17	Teflon Grommet	100157596
18	Bi-Directional Booster	See Appendix A
19	End Seal	100005251
20	Alignment Insert	100005255

* Included in shipping assembly.
**Teflon is a trademark of E.I. Dupont De Nemours.

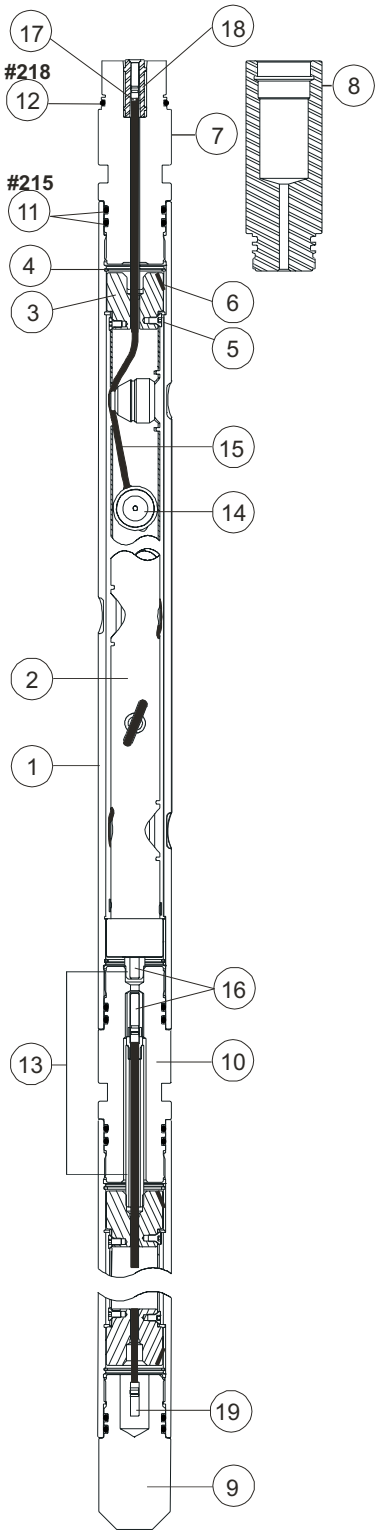

1 9/16-in. 4-spf 90° Scalloped System

1 $^{9}/_{16}$-in. 4-spf 90° Scalloped System

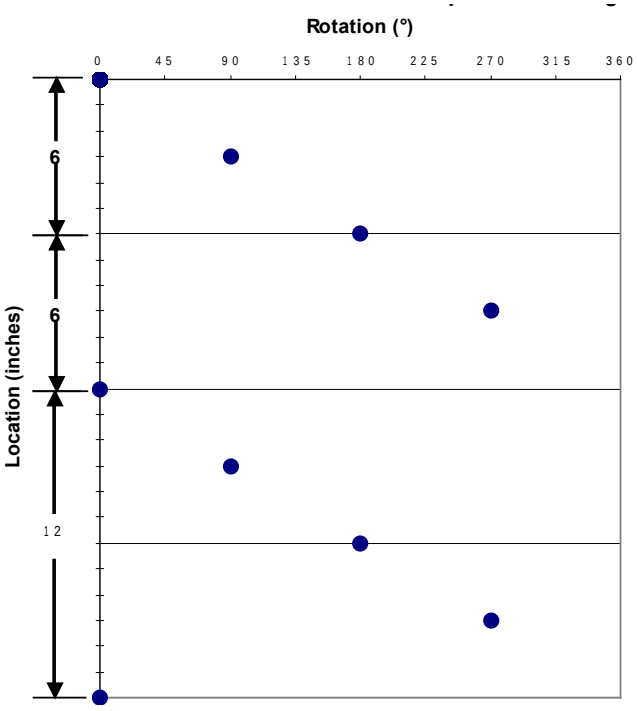

Shot Pattern for 1.5625-in.
4-spf 90° Phasing

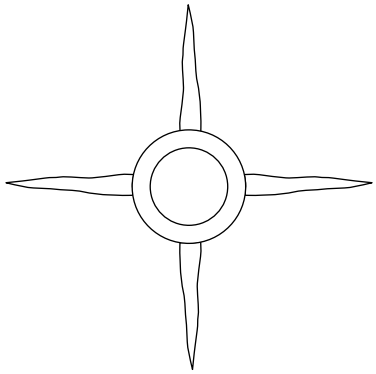

90° Phasing
4 Perforation Planes

JRC Gun Weights

Length ft (m)	4 (1.22)	7 (2.13)	11 (3.35)	15 (4.57)	21 (6.4)
Loaded lb (kg)	13 (6)	23 (10)	36 (16)	49 (22)	68 (31)
Spacer lb (kg)	10 (5)	17 (8)	27 (12)	37 (17)	52 (23)

1 9/16-in. 4-spf 180° Scalloped System

Item	Description	Part No.
	Shipping Assembly - 4ft	101235941
	Shipping Assembly - 7ft	101235942
	Shipping Assembly - 11ft	101235943
	Shipping Assembly - 15ft	101235944
	Shipping Assembly - 21ft	101235945
*1	Gun, Scallop - 4ft	101235931
	Gun, Scallop - 7ft	101235932
	Gun, Scallop - 11ft	101235933
	Gun, Scallop - 15ft	101235934
	Gun, Scallop - 21ft	101235935
*2	Tube, Charge Holder - 4ft	101235936
	Tube, Charge Holder - 7ft	101235937
	Tube, Charge holder - 11ft	101235938
	Tube, Charge Holder - 15ft	101235939
	Tube, Charge Holder - 21ft	101235940
*3	Fixture, Alignment	101235706
*4	Snap Ring	101236795
*5	Screw, Flat Head #10-32 x 0.38" L	101263001
*6	Screw, Set #10-32 x 0.50" L	100028832
7	Firing Head Crossover - Vann	100156707
8	Firing Head Crossover - 'Go' Style	101283107
9	Bull Plug	101235687
10	Tandem, Grooved	101235679
11	O-Ring, Buna 90 Duro #215	100001937
	O-Ring, Viton 95 Duro #215	100064810
	O-Ring, Backup #215	101283230
12	O-Ring, Buna 90 Duro #218	100001951
	O-Ring, Viton 95 Duro #218	100064830
	O-Ring, Backup #218	101227694
*13	Kit, Booster Hardware	101232634
14	Charge - 3.4g ***MILLENNIUM***® HMX	100157028
15	Detonating Cord	See Appendix A
16	Detonator, Electric	See Det. Section
17	Teflon Grommet	100157596
18	Bi-Directional Booster	See Appendix A
19	End Seal	100005251
20	Alignment Insert	100005255

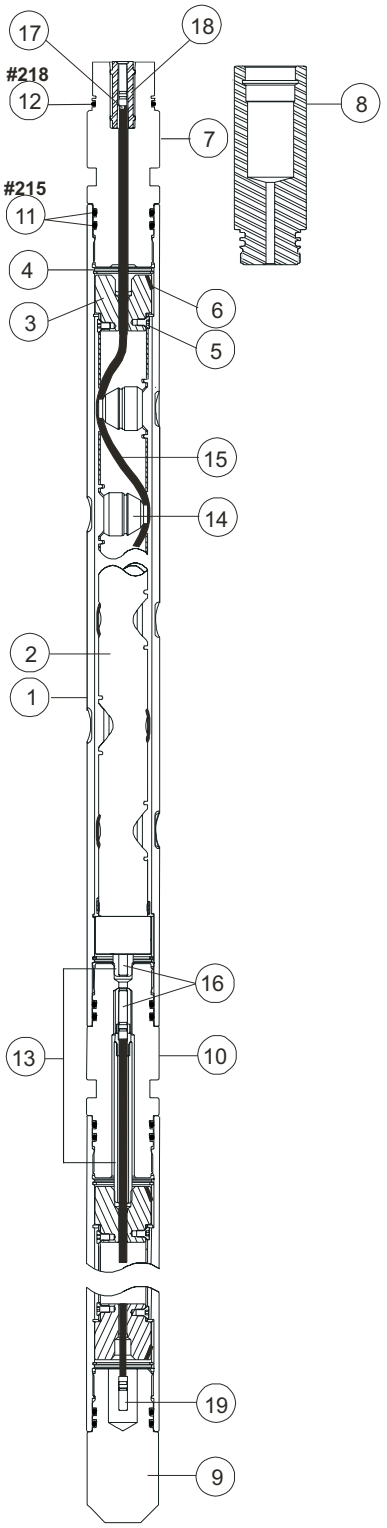

1 9/16-in. 4-spf 180° Scalloped System

* Included in shipping assembly.
**Teflon is a trademark of E.I. Dupont De Nemours.

1 $^{9}/_{16}$-in. 4-spf 180° Scalloped System

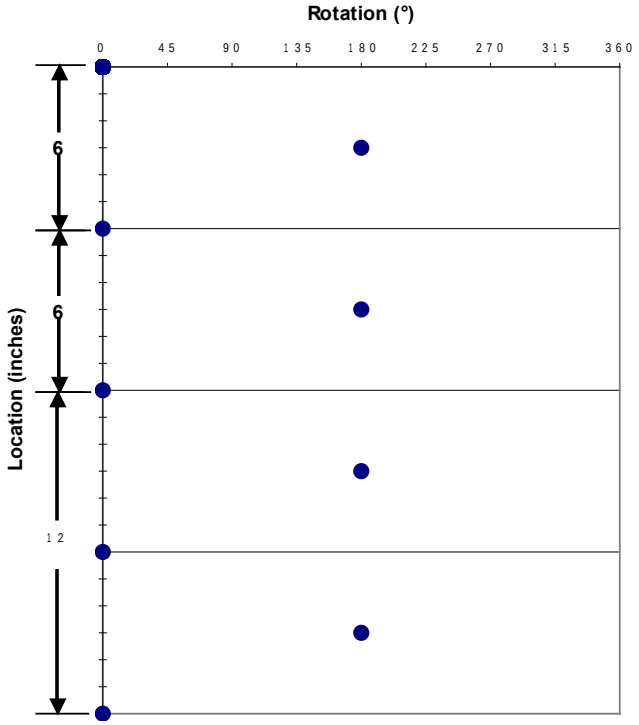

Shot Pattern for 1.5625-in.
4-spf 180° Phasing

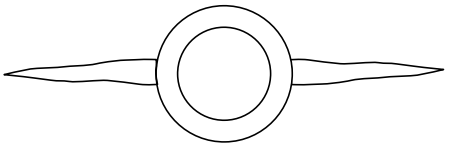

180° Phasing
2 Perforation Planes

JRC Gun Weights

Length ft (m)	4 (1.22)	7 (2.13)	11 (3.35)	15 (4.57)	21 (6.4)
Loaded lb (kg)	13 (6)	23 (10)	36 (16)	49 (22)	68 (31)
Spacer lb (kg)	10 (5)	17 (8)	27 (12)	37 (17)	52 (23)

1 9/16-in. 6-spf 0° Scalloped System

Item	Description	Part No.
	Shipping Assembly - 4ft	101294302
	Shipping Assembly - 7ft	101294303
	Shipping Assembly - 11ft	101294304
	Shipping Assembly - 15ft	101294305
	Shipping Assembly - 21ft	101294306

*1	Gun, Scallop - 4ft	101294307
	Gun, Scallop - 7ft	101294308
	Gun, Scallop - 11ft	101294309
	Gun, Scallop - 15ft	102194310
	Gun, Scallop - 21ft	101294311
*2	Tube, Charge Holder - 4ft	101294312
	Tube, Charge Holder - 7ft	101294314
	Tube, Charge Holder - 11ft	101294315
	Tube, Charge Holder - 15ft	101294316
	Tube, Charge Holder - 21ft	101294317
*3	Fixture, Alignment	101235706
*4	Snap Ring	101236795
*5	Screw, Flat Head #10-32 x 0.38" L	101263001
*6	Screw, Set #10-32 x 0.50" L	100028832
7	Firing Head Crossover - Vann	100156707
8	Firing Head Crossover - 'Go' Style	101293107
9	Bull Plug	101235687
10	Tandem, Grooved	101235679
11	O-Ring, Buna 90 Duro #215	100001937
	O-Ring, Viton 95 Duro #215	100064810
	O-Ring, Backup #215	101283230
12	O-Ring, Buna 90 Duro #218	100001951
	O-Ring, Viton 95 Duro #218	100064830
	O-Ring, Backup #218	101227694
*13	Kit, Booster Hardware	101232634
14	Charge - 3.4g ***Millennium***® HMX	100157028
15	Detonating Cord	See Appendix A
16	Detonator, Electric	See Det. Section
17	Teflon Grommet	100157596
18	Bi-Directional Booster	See Appendix A
19	End Seal	100005251
20	Alignment Insert	100005255

* Included in shipping assembly.
**Teflon is a trademark of E.I. Dupont De Nemours.

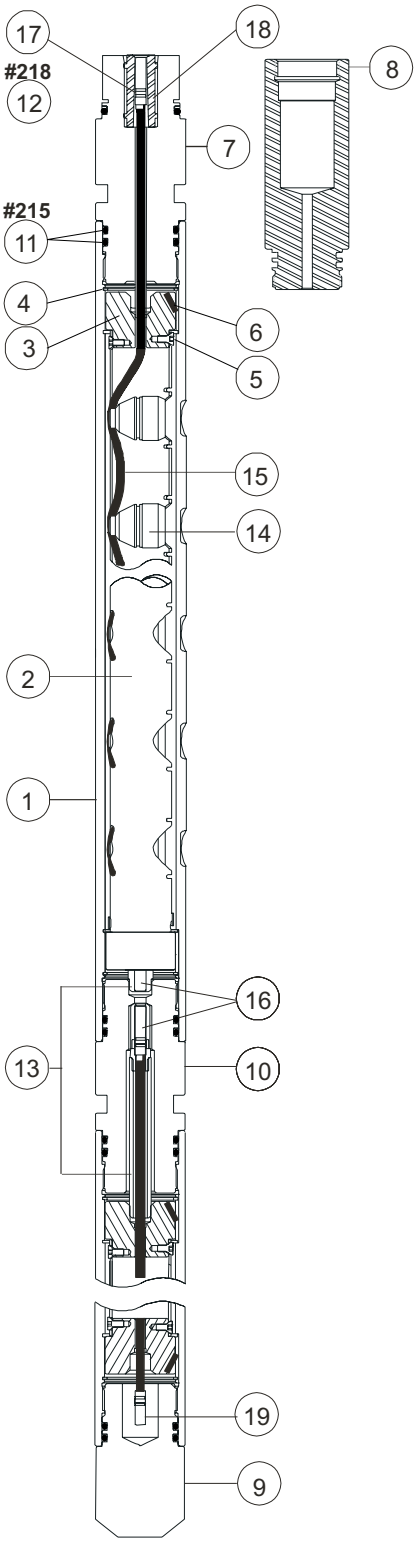

1 9/16-in. 6-spf 0° Scalloped System

1 $^{9}/_{16}$-in. 6-spf 0° Scalloped System

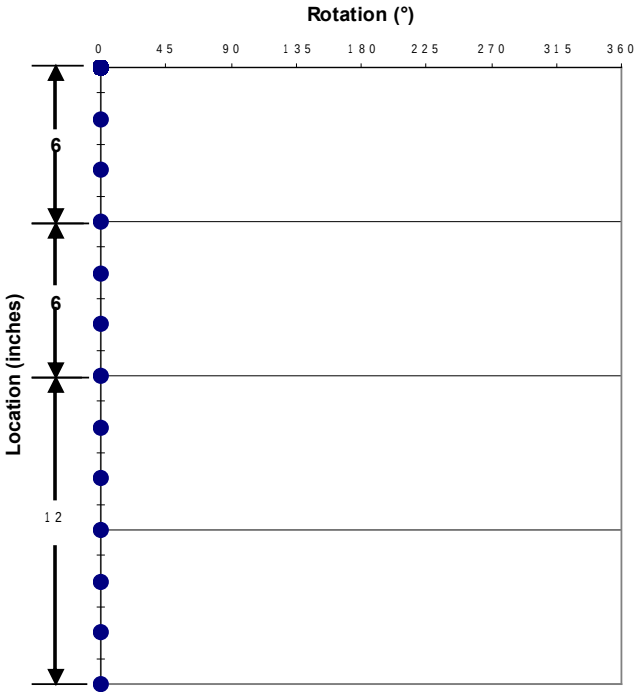

Shot Pattern for 1.5625-in.
6-spf 0° Phasing

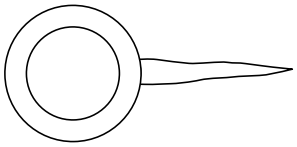

0° Phasing
1 Perforation Plane

JRC Gun Weights

Length ft (m)	4 (1.22)	7 (2.13)	11 (3.35)	15 (4.57)	21 (6.4)
Loaded lb (kg)	14 (6)	24 (11)	37 (17)	51 (23)	71 (32)
Spacer lb (kg)	10 (5)	17 (8)	27 (12)	37 (17)	52 (24)

1 9/16-in. 6-spf 60° Scalloped System

Item	Description	Part No.
	Shipping Assembly - 4ft	101235906
	Shipping Assembly - 7ft	101235907
	Shipping Assembly - 11ft	101235908
	Shipping Assembly - 15ft	101235909
	Shipping Assembly - 21ft	101235910

*1	Gun, Scallop - 4ft	101235895
	Gun, Scallop - 7ft	101235896
	Gun, Scallop - 11ft	101235897
	Gun, Scallop - 15ft	101235898
	Gun, Scallop - 21ft	101235899
*2	Tube, Charge Holder - 4ft	101235900
	Tube, Charge Holder - 7ft	101235901
	Tube, Charge Holder - 11ft	101235902
	Tube, Charge Holder - 15ft	101235903
	Tube, Charge Holder - 21ft	101235904
*3	Fixture, Alignment	101235706
*4	Snap Ring	101236795
*5	Screw, Flat Head #10-32 x 0.38" L	101263001
*6	Screw, Set #10 x 0.50" L	100028832
7	Firing Head Crossover - Vann	100156707
8	Firing Head Crossover - 'Go' Style	101283107
9	Bull Plug	101235687
10	Tandem, Grooved	101235679
11	O-Ring, Buna 90 Duro #215	100001937
	O-Ring, Viton 95 Duro #215	100064810
	O-Ring, Backup #215	101283230
12	O-Ring, Buna 90 Duro #218	100001951
	O-Ring, Viton 95 Duro #218	100064830
	O-Ring, Backup #218	101227694
*13	Kit, Booster Hardware	101232634
14	Charge - 3.4g HMX ***Millennium***®	100157028
15	Detonating Cord	See Appendix A
16	Detonator, Electric	See Det. Section
17	Teflon Grommet	100157596
18	Bi-Directional Booster	See Appendix A
19	End Seal	100005251
20	Alignment Insert	100005255

* Included in shipping assembly.
**Teflon is a trademark of E.I. Dupont De Nemours.

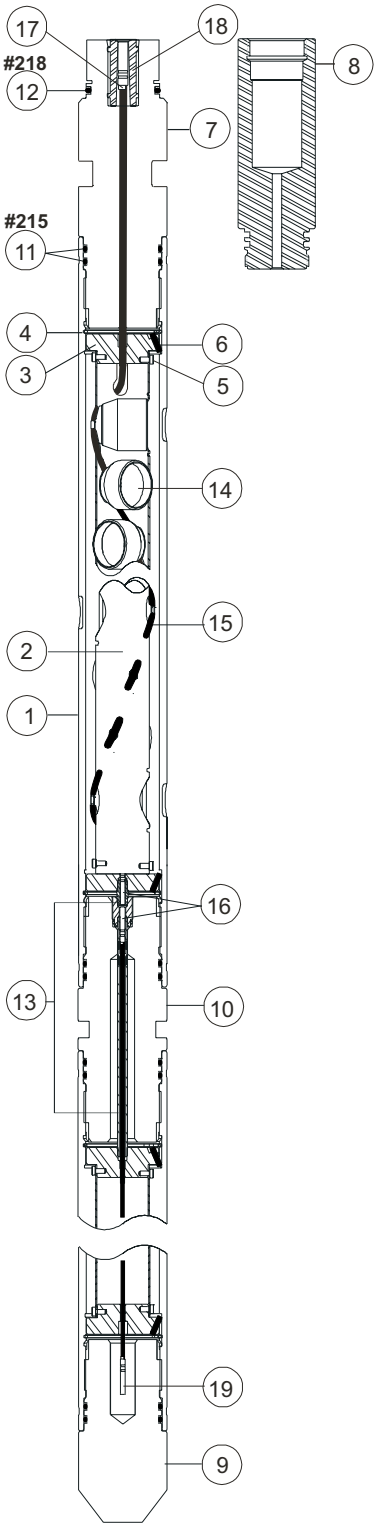

1 9/16-in. 6-spf 60° Scalloped System

1 $^{9}/_{16}$-in. 6-spf 60° Scalloped System

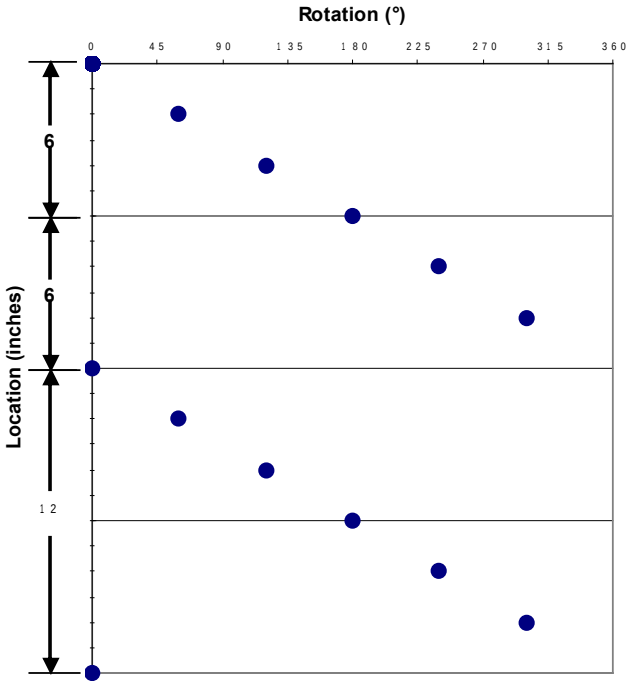

Shot Pattern for 1.5625-in.
6-spf 60° Phasing

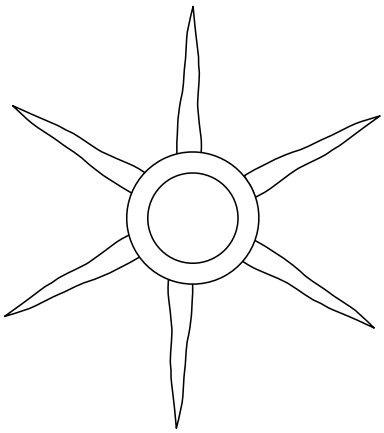

60° Phasing
6 Perforation Planes

JRC Gun Weights

Length ft (m)	4 (1.22)	7 (2.13)	11 (3.35)	15 (4.57)	21 (6.4)
Loaded lb (kg)	14 (6)	24 (11)	37 (17)	51 (23)	71 (32)
Spacer lb (kg)	10 (5)	17 (8)	27 (12)	37 (17)	52 (24)

2-in. 4-spf 0° Scalloped System

Item	Description	Part No.
	Shipping Assembly - 4ft	101235772
	Shipping Assembly - 7ft	101235773
	Shipping Assembly - 11ft	101235774
	Shipping Assembly - 15ft	101235775
	Shipping Assembly - 21ft	101235776
*1	Gun, Scallop - 4ft	101235752
	Gun, Scallop - 7ft	101235753
	Gun, Scallop - 11ft	101235755
	Gun, Scallop - 15ft	101235756
	Gun, Scallop - 21ft	101235757
*2	Tube, Charge Holder - 4ft	101235758
	Tube, Charge Holder - 7ft	101235760
	Tube, Charge Holder - 11ft	101235761
	Tube, Charge Holder - 15ft	101235763
	Tube, Charge Holder - 21ft	101235765
*3	Fixture, Alignment	101234456
*4	Snap Ring	101234459
*5	Screw, Socket #10 x0.38" L	101273974
*6	Screw, Set #10 x 0.50" L	100028832
7	Firing Head Crossover - Vann	100008010
8	Firing Head Crossover - 'Go' Systems	101283114
9	Bull Plug	100008011
10	Tandem, Grooved	101235011
11	O-Ring, #221 Buna, 90 Duro	100001953
	O-Ring, #221 Viton, 95 Duro	100064832
	O-Ring, Backup #221	101227517
12	O-Ring, #218 Buna, 90 Duro	100001951
	O-Ring, #218 Viton, 95 Duro	100064830
	Backup, O-Ring, #218	101227694
*13	Kit, Booster Hardware	101232635
14	Charge - 6.80g HMX ***Millennium***®	101208224
	Charge - 6.80g HMX SDP	100008017
	Charge - 6.80g HMX BH	101206246
	Charge - 6.90g HNS DP	100157018
15	Detonating Cord	See Appendix A
16	Detonator, Electric	See Det. Section
17	Telfon Grommet	100157596
18	Bi-Directional Booster	See Appendix A
19	End Seal	100005251
20	Alignment Insert	100005255

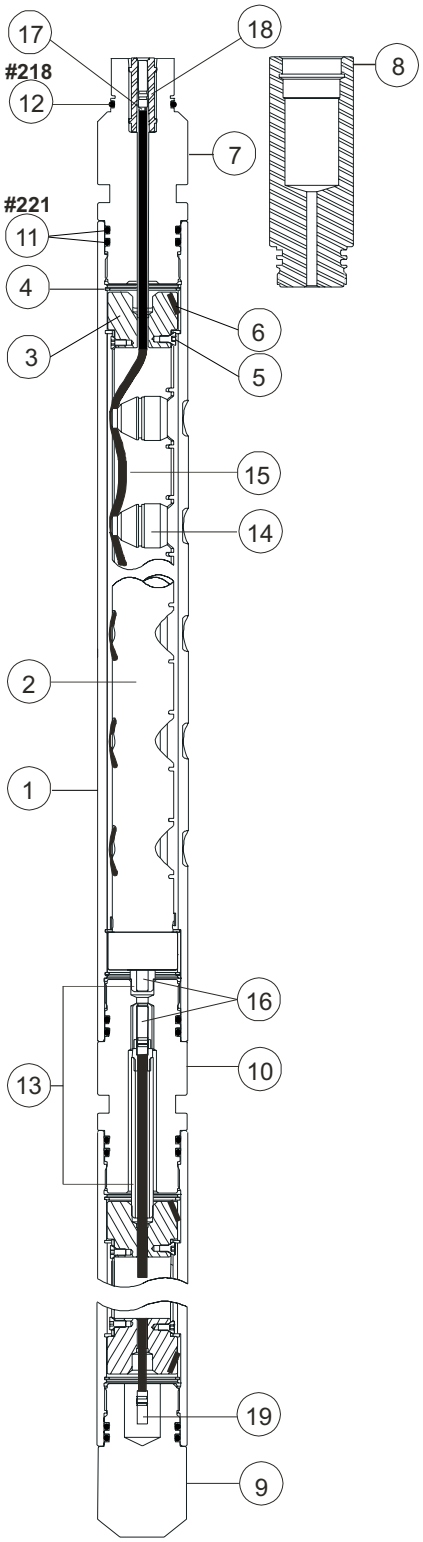

2-in. 4-spf 0° Scalloped System

* Included in shipping assembly.
**Teflon is a trademark of E.I. Dupont De Nemours.

2-in. 4-spf 0° Scalloped System

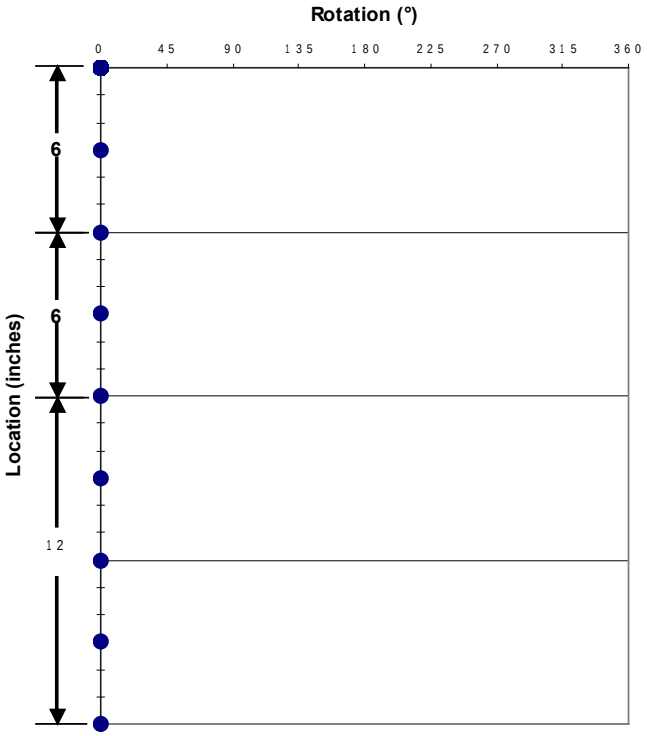

Shot Pattern for 2-in.
4-spf 0° Phasing

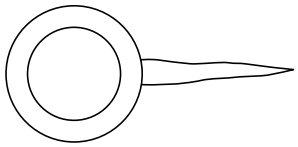

0° Phasing
1 Perforation Plane

JRC Gun Weights

Length ft (m)	4 (1.22)	7 (2.13)	11 (3.35)	15 (4.57)	21 (6.4)
Loaded lb (kg)	14 (6)	22 (10)	34 (16)	47 (21)	65 (30)
Spacer lb (kg)	10 (5)	17 (8)	28 (13)	38 (17)	52 (24)

2-in. 4-spf 60° Scalloped System

Item	Description	Part No.
	Shipping Assembly - 4ft	101280019
	Shipping Assembly - 7ft	101280020
	Shipping Assembly - 11ft	101280021
	Shipping Assembly - 15ft	101280022
	Shipping Assembly - 21ft	101280023
*1	Gun, Scallop - 4ft	101279726
	Gun, Scallop - 7ft	101279725
	Gun, Scallop - 11ft	101279724
	Gun, Scallop - 15ft	101279722
	Gun, Scallop - 21ft	101279723
*2	Tube, Charge Holder - 4ft	101279752
	Tube, Charge Holder - 7ft	101279754
	Tube, Charge Holder - 11ft	101279755
	Tube, Charge Holder - 15ft	101279756
	Tube, Charge Holder - 21ft	101279757
*3	Fixture, Alignment	101234456
*4	Snap Ring	101234459
*5	Screw, Socket #10 - 32 x 0.38" L	101236974
*6	Screw, Set #10 - 32 x 0.50" L	100028832
7	Firing Head Crossover - Vann	100008010
8	Firing Head Crossover - 'Go' Systems	101283114
9	Bull Plug	100008011
10	Tandem, Grooved	101235011
11	O-Ring, Buna 90 Duro #221	100001953
	O-Ring, Viton 95 Duro #221	100064832
	O-Ring, Backup #221	101227517
12	O-Ring, Buna 90 Duro #218	100001951
	O-Ring, Viton, 95 Duro #218	100064830
	Backup, O-Ring, #218	101227694
*13	Kit, Booster Hardware	101232635
14	Charge - 6.80g HMX ***Millennium®***	101208224
	Charge - 6.80g HMX SDP	100008017
	Charge - 6.80g HMX BH	101206246
	Charge - 6.90g HNS DP	100157018
15	Detonating Cord	See Appendix A
16	Detonator, Electric	See Det. Section
17	Telfon Grommet	100157596
18	Bi-Directional Booster	See Appendix A
19	End Seal	100005251
20	Alignment Insert	100005255

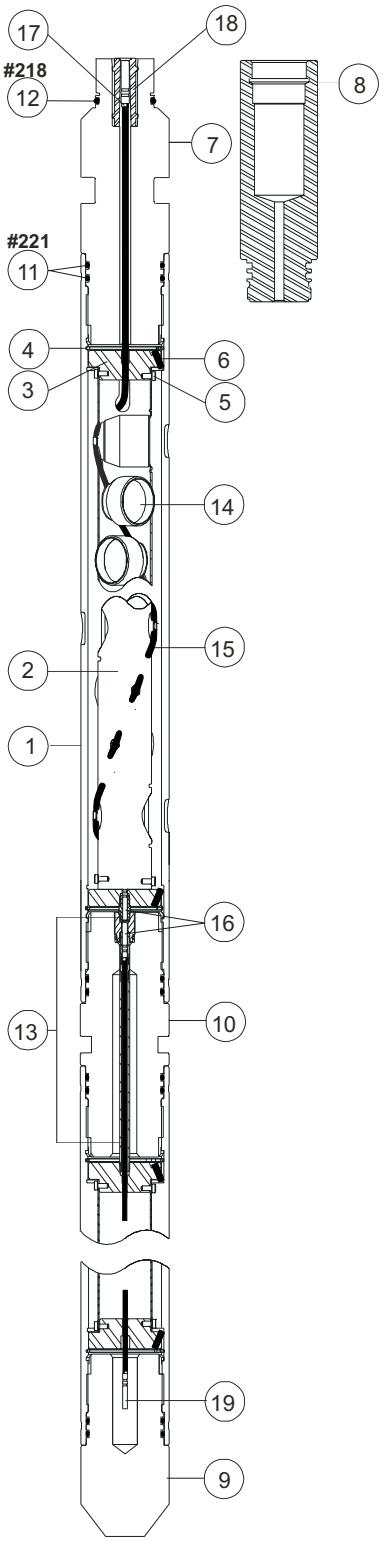

2-in. 4-spf 60° Scalloped System

* Included in shipping assembly.
**Teflon is a trademark of E.I. Dupont De Nemours.

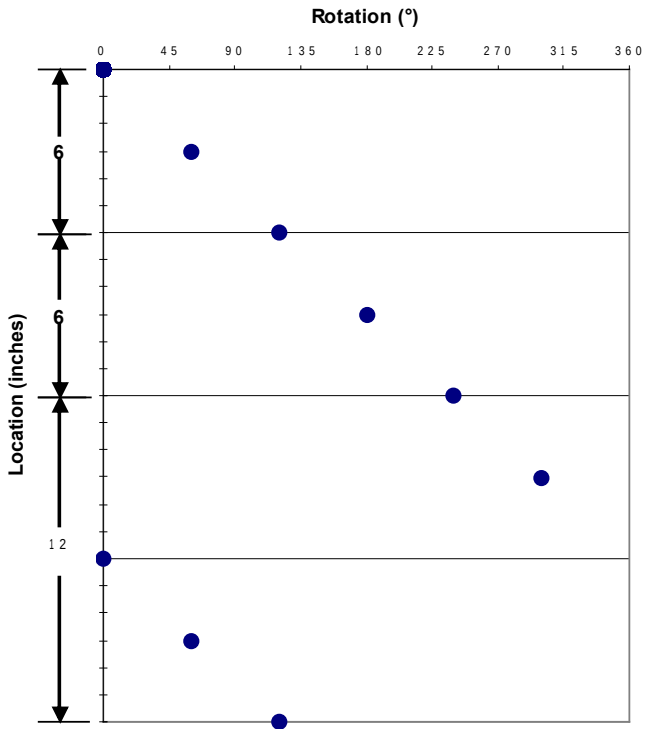

Shot Pattern for 2-in.
4-spf 60° Phasing

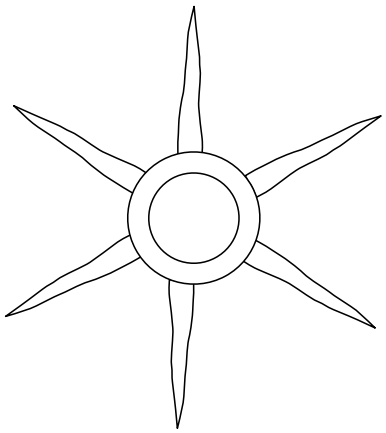

60° Phasing
6 Perforation Planes

JRC Gun Weights

Length ft (m)	4 (1.22)	7 (2.13)	11 (3.35)	15 (4.57)	21 (6.4)
Loaded lb (kg)	12 (6)	22 (10)	34 (16)	47 (21)	65 (30)
Spacer lb (kg)	10 (5)	17 (8)	28 (13)	38 (17)	52 (24)

2-in. 4-spf 90° Scalloped System

Item	Description	Part No.
	Shipping Assembly - 4ft	101235791
	Shipping Assembly - 7ft	101235792
	Shipping Assembly - 11ft	101235793
	Shipping Assembly - 15ft	101235794
	Shipping Assembly - 21ft	101235795
*1	Gun, Scallop - 4ft	101235780
	Gun, Scallop - 7ft	101235781
	Gun, Scallop - 11ft	101235782
	Gun, Scallop - 15ft	101235783
	Gun, Scallop - 21ft	101235784
*2	Tube, Charge Holder - 4ft	101235786
	Tube, Charge Holder - 7ft	101235787
	Tube, Charge Holder - 11ft	101235788
	Tube, Charge Holder - 15ft	101235789
	Tube, Charge Holder - 21ft	101235790
*3	Fixture, Alignment	101234456
*4	Snap Ring	101234459
*5	Screw, Socket #10 - 32 x 0.38" L	101236974
*6	Screw, Set #10 - 32 x 0.50" L	100028832
7	Firing Head Crossover - Vann	100008010
8	Firing Head Crossover - 'Go' Systems	101283114
9	Bull Plug	100008011
10	Tandem, Grooved	101235011
11	O-Ring, Buna 90 Duro #221	100001953
	O-Ring, Viton 95 Duro #221	100064832
	O-Ring, Backup #221	101227517
12	O-Ring, Buna 90 Duro #218	100001951
	O-Ring, Viton, 95 Duro #218	100064830
	Backup, O-Ring, #218	101227694
*13	Kit, Booster Hardware	101232635
14	Charge - 6.80g HMX ***Millennium***®	101208224
	Charge - 6.80g HMX SDP	100008017
	Charge - 6.80g HMX BH	101206246
	Charge - 6.90g HNS DP	100157018
15	Detonating Cord	See Appendix A
16	Detonator, Electric	See Det. Section
17	Telfon Grommet	100157596
18	Bi-Directional Booster	See Appendix A
19	End Seal	100005251
20	Alignment Insert	100005255

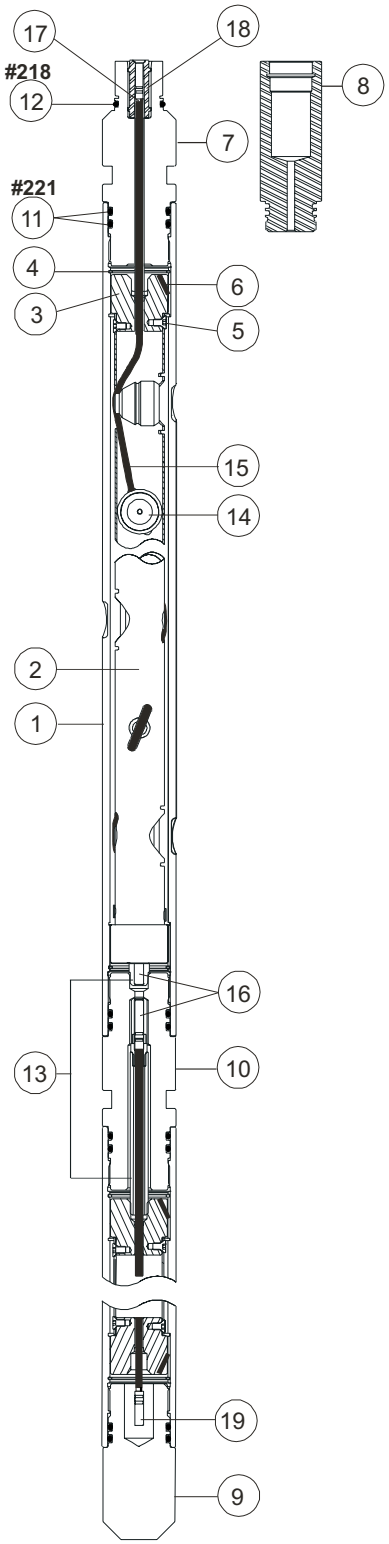

2-in. 4-spf 90° Scalloped System

* Included in shipping assembly.
**Teflon is a trademark of E.I. Dupont De Nemours.

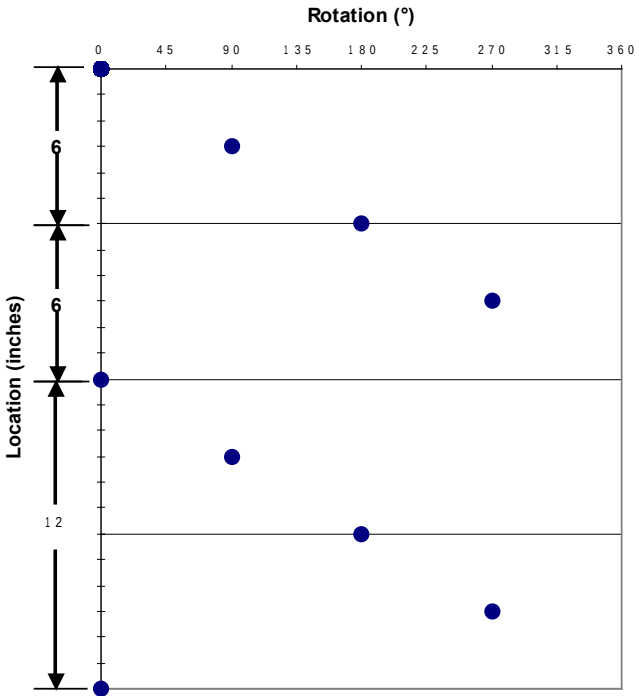

Shot Pattern for 2-in.
4-spf 90° Phasing

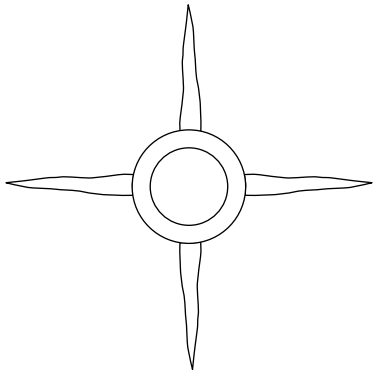

90° Phasing
4 Perforation Planes

JRC Gun Weights

Length ft (m)	4 (1.22)	7 (2.13)	11 (3.35)	15 (4.57)	21 (6.4)
Loaded lb (kg)	12 (6)	22 (10)	34 (16)	47 (21)	65 (30)
Spacer lb (kg)	10 (5)	17 (8)	27 (12)	37 (17)	52 (24)

2-in. 4-spf 180° Scalloped System

Item	Description	Part No.
	Shipping Assembly - 4ft	101235823
	Shipping Assembly - 7ft	101235824
	Shipping Assembly - 11ft	101235825
	Shipping Assembly - 15ft	101235826
	Shipping Assembly - 21ft	101235827
*1	Gun, Scallop - 4ft	101235829
	Gun, Scallop - 7ft	101235802
	Gun, Scallop - 11ft	101235803
	Gun, Scallop - 15ft	101235804
	Gun, Scallop - 21ft	101235805
*2	Tube, Charge Holder - 4ft	101235807
	Tube, Charge Holder - 7ft	101235808
	Tube, Charge Holder - 11ft	101235809
	Tube, Charge Holder - 15ft	101235810
	Tube, Charge Holder - 21ft	101235811
*3	Fixture, Alignment	101234456
*4	Snap Ring	101234459
*5	Screw, Socket #10 - 32 x 0.38" L	101236974
*6	Screw, Set #10 - 32 x 0.50" L	100028832
7	Firing Head Crossover - Vann	100008010
8	Firing Head Crossover - 'Go' Systems	101283114
9	Bull Plug	100008011
10	Tandem, Grooved	101235011
11	O-Ring, Buna 90 Duro #221	100001953
	O-Ring, Viton 95 Duro #221	100064832
	O-Ring, Backup #221	101227517
12	O-Ring, Buna 90 Duro #218	100001951
	O-Ring, Viton, 95 Duro #218	100064830
	Backup, O-Ring, #218	101227694
*13	Kit, Booster Hardware	101232635
14	Charge - 6.80g HMX ***Millennium®***	101208224
	Charge - 6.80g HMX SDP	100008017
	Charge - 6.80g HMX BH	101206246
	Charge - 6.90g HNS DP	100157018
15	Detonating Cord	See Appendix A
16	Detonator, Electric	See Det. Section
17	Telfon Grommet	100157596
18	Bi-Directional Booster	See Appendix A
19	End Seal	100005251
20	Alignment Insert	100005255

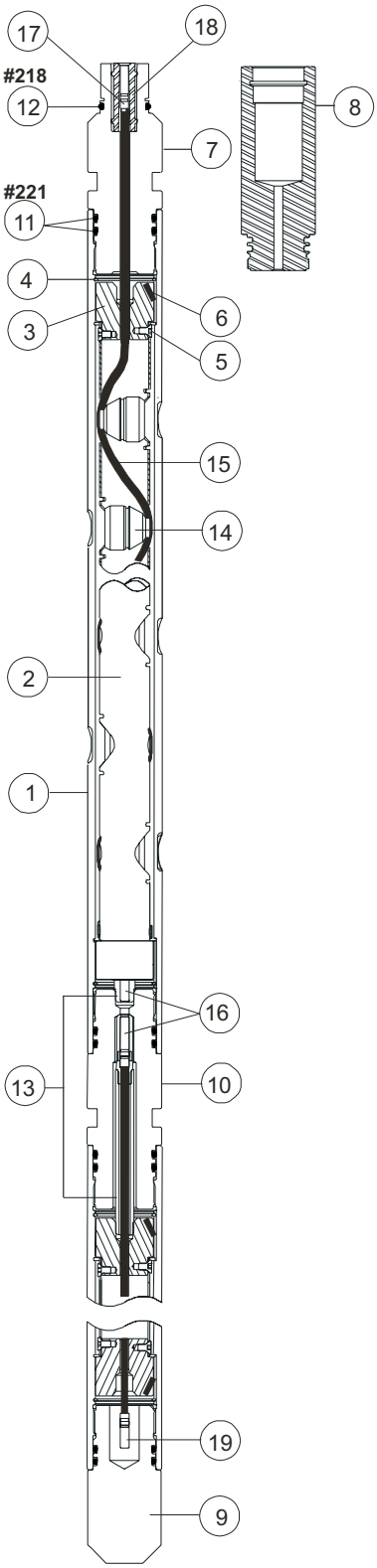

2-in. 4-spf 180° Scalloped System

* Included in shipping assembly.
**Teflon is a trademark of E.I. Dupont De Nemours.

2-in. 4-spf 180° Scalloped System

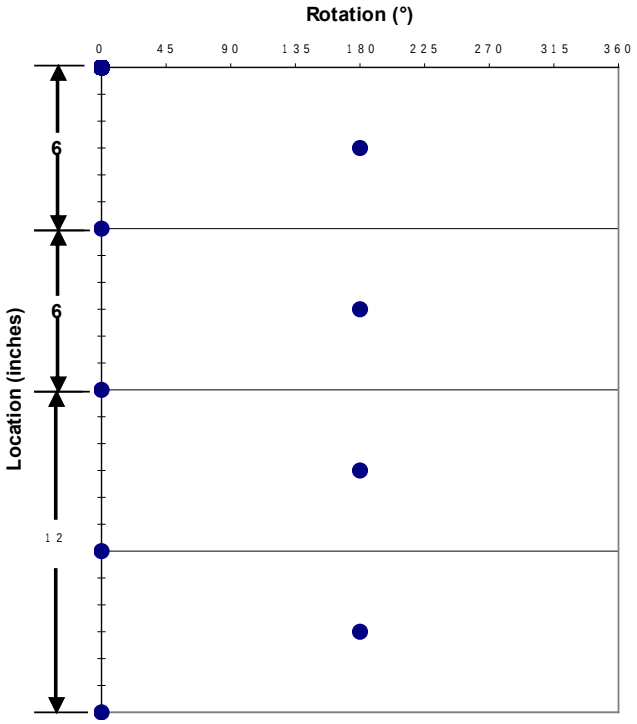

Shot Pattern for 2-in.
4-spf 180° Phasing

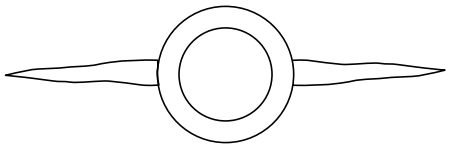

180° Phasing
2 Perforation Planes

JRC Gun Weights

Length ft (m)	4 (1.22)	7 (2.13)	11 (3.35)	15 (4.57)	21 (6.4)
Loaded lb (kg)	12 (6)	22 (10)	34 (16)	47 (21)	65 (30)
Spacer lb (kg)	10 (5)	17 (8)	28 (13)	38 (17)	52 (24)

2-in. 6-spf 0° Scalloped System

Item	Description	Part No.
	Shipping Assembly - 4ft	101294335
	Shipping Assembly - 7ft	101294336
	Shipping Assembly - 11ft	101294337
	Shipping Assembly - 15ft	101294338
	Shipping Assembly - 21ft	102194339
*1	Gun, Scallop - 4ft	101294343
	Gun, Scallop - 7ft	101294344
	Gun, Scallop - 11ft	101294345
	Gun, Scallop - 15ft	101294346
	Gun, Scallop - 21ft	101294348
*2	Tube, Charge Holder - 4ft	101294349
	Tube, Charge Holder - 7ft	101294352
	Tube, Charge Holder - 11ft	101294353
	Tube, Charge Holder - 15ft	101294354
	Tube, Charge Holder - 21ft	101294355
*3	Fixture, Alignment	101234456
*4	Snap Ring	101234459
*5	Screw, Socket #10 - 32 x 0.38" L	101273974
*6	Screw, Set #10 - 32 x 0.50" L	100028832
7	Firing Head Crossover - Vann	100008010
8	Firing Head Crossover - 'Go' Systems	101283114
9	Bull Plug	100008011
10	Tandem, Grooved	101235011
11	O-Ring, Buna 90 Duro #221	100001953
	O-Ring, Viton 95 Duro #221	100064832
	O-Ring, Backup #221	101227517
12	O-Ring, Buna 90 Duro #218	100001951
	O-Ring, #218 Viton, 95 Duro	100064830
	O-Ring, Backup #218	101227694
*13	Kit, Booster Hardware	101232635
14	Charge - 6.80g HMX ***Millennium***®	101208224
	Charge - 6.80g HMX SDP	100008017
	Charge - 6.80g HMX BH	101206246
	Charge - 6.90g HNS DP	100157018
15	Detonating Cord	See Appendix A
16	Detonator, Electric	See Det. Section
17	Telfon Grommet	100157596
18	Bi-Directional Booster	See Appendix A
19	End Seal	100005251
20	Alignment Insert	100005255

* Included in shipping assembly.
**Teflon is a trademark of E.I. Dupont De Nemours.

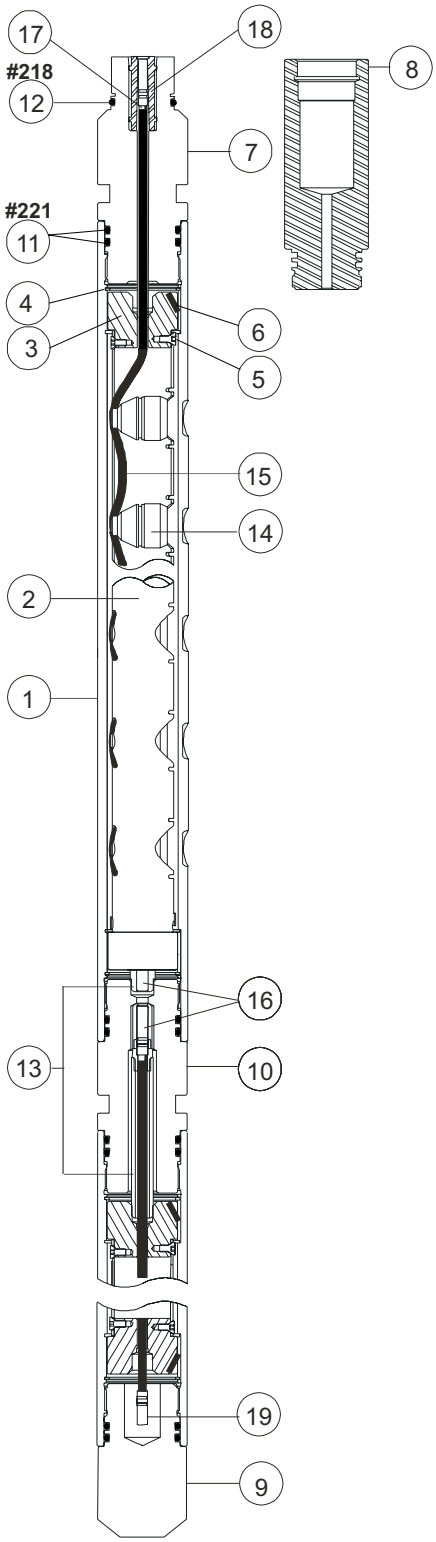

2-in. 6-spf 0° Scalloped System

2-in. 6-spf 0° Scalloped System

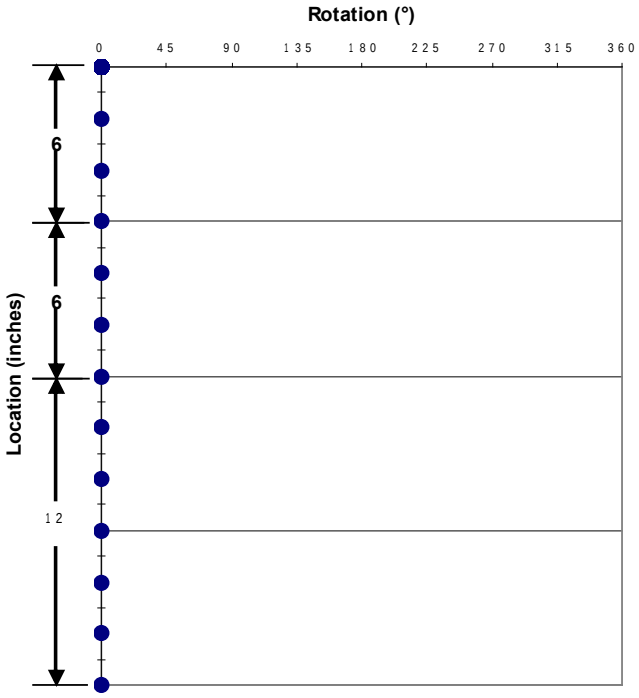

Shot Pattern for 2-in.
6-spf 0° Phasing

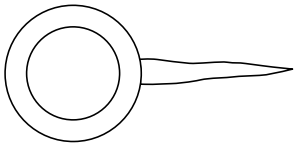

0° Phasing
1 Perforation Plane

JRC Gun Weights

Length ft (m)	4 (1.22)	7 (2.13)	11 (3.35)	15 (4.57)	21 (6.4)
Loaded lb (kg)	22 (10)	39 (17)	61 (27)	84 (38)	118 (53)
Spacer lb (kg)	16 (7)	28 (13)	44 (20)	60 (27)	85 (38)

2-in. 6-spf 60° Scalloped System

Item	Description	Part No.
	Shipping Assembly - 4ft	101234455
	Shipping Assembly - 7ft	101234525
	Shipping Assembly - 11ft	101234526
	Shipping Assembly - 15ft	101235975
	Shipping Assembly - 21ft	101234529
*1	Gun, Scallop - 4ft	101234143
	Gun, Scallop - 7ft	101234144
	Gun, Scallop - 11ft	101234145
	Gun, Scallop - 15ft	101235715
	Gun, Scallop - 21ft	101234147
*2	Tube, Charge Holder - 4ft	101234197
	Tube, Charge Holder - 7ft	101234201
	Tube, Charge Holder - 11ft	101234202
	Tube, Charge Holder - 15ft	101235714
	Tube, Charge Holder - 21ft	101234205
*3	Fixture, Alignment	101234456
*4	Snap Ring	101234459
*5	Screw, Socket #10 - 32 x 0.38" L	101273974
*6	Screw, Set #10 - 32 x 0.50" L	100028832
7	Firing Head Crossover - Vann	100008010
8	Firing Head Crossover - 'Go' Systems	101283114
9	Bull Plug	100008011
10	Tandem, Grooved	101235011
11	O-Ring, Buna 90 Duro #221	100001953
	O-Ring, Viton 95 Duro #221	100064832
	O-Ring, Backup #221	101227517
12	O-Ring, Buna 90 Duro #218	100001951
	O-Ring, #218 Viton, 95 Duro	100064830
	O-Ring, Backup #218	101227694
*13	Kit, Booster Hardware	101232635
14	Charge - 6.80g HMX ***Millennium***®	101208224
	Charge - 6.80g HMX SDP	100008017
	Charge - 6.80g HMX BH	101206246
	Charge - 6.90g HNS DP	100157018
15	Detonating Cord	See Appendix A
16	Detonator, Electric	See Det. Section
17	Telfon Grommet	100157596
18	Bi-Directional Booster	See Appendix A
19	End Seal	100005251
20	Alignment Insert	100005255

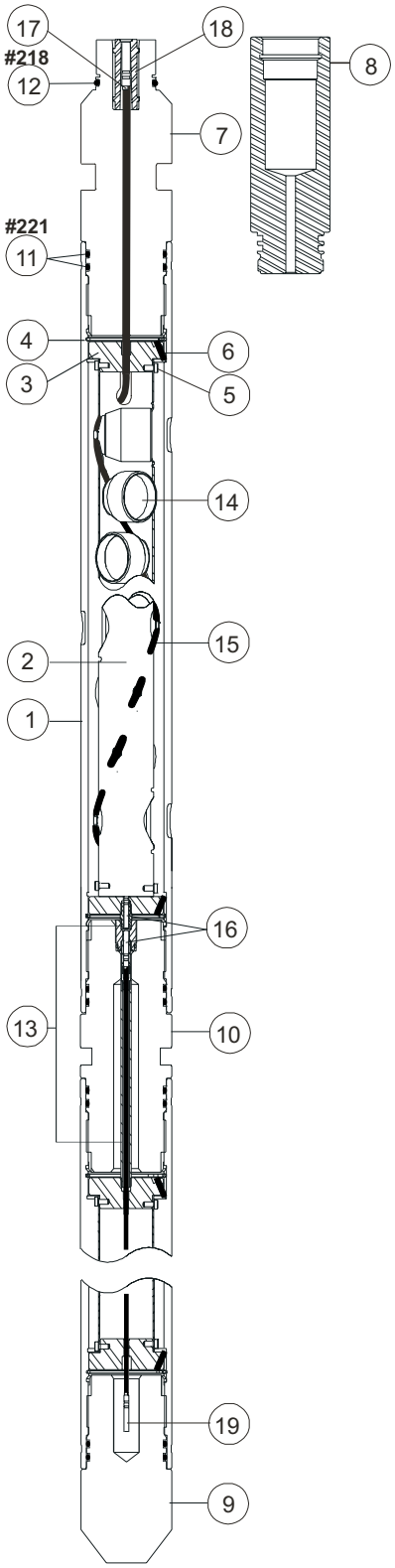

2-in. 6-spf 60°
Scalloped System

* Included in shipping assembly.
**Teflon is a trademark of E.I. Dupont De Nemours.

2-in. 6-spf 60° Scalloped System

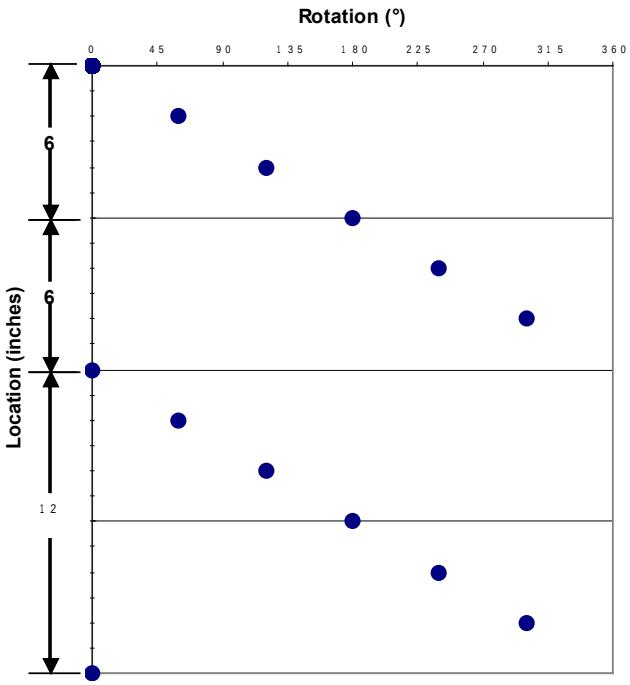

Shot Pattern for 2-in.
6-spf 60° Phasing

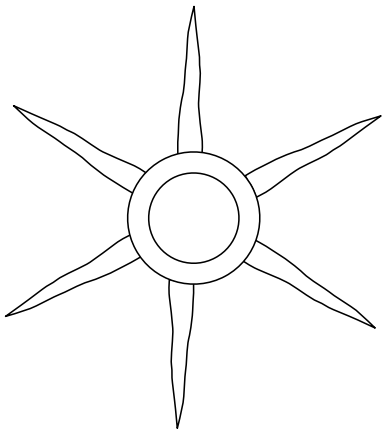

60° Phasing
6 Perforation Planes

JRC Gun Weights

Length ft (m)	4 (1.22)	7 (2.13)	11 (3.35)	15 (4.57)	21 (6.4)
Loaded lb (kg)	22 (10)	39 (17)	61 (27)	84 (38)	118 (53)
Spacer lb (kg)	16 (7)	28 (13)	44 (20)	60 (27)	85 (38)

2 $^1/_2$-in. 4-spf 0° Scalloped System

Item	Description	Part No.
	Shipping Assembly - 4ft	101235840
	Shipping Assembly - 7ft	101235857
	Shipping Assembly - 11ft	101235858
	Shipping Assembly - 15ft	101235859
	Shipping Assembly - 21ft	101235860
*1	Gun, Scallop - 4ft	101235800
	Gun, Scallop - 7ft	101235830
	Gun, Scallop - 11ft	101235831
	Gun, Scallop - 15ft	101235832
	Gun, Scallop - 21ft	101235833
*2	Tube, Charge Holder - 4ft	101235834
	Tube, Charge Holder - 7ft	101235835
	Tube, Charge Holder - 11ft	101235836
	Tube, Charge Holder - 15ft	101235837
	Tube, Charge Holder - 21ft	101235838
*3	Fixture, Alignment	101236334
*4	Snap Ring	101236797
*5	Screw, Socket #10 x.38" L	101273974
*6	Screw, Set #10 x .50" L	100028832
7	Firing Head Crossover - Vann	101211269
8	Firing Head Crossover - 'Go' Style	101283122
9	Bull Plug	101227806
10	Tandem, Grooved	101236893
11	O-Ring, #225 Buna, 90 Duro	100001996
	O-Ring, #225 Viton, 95 Duro	100003925
	O-Ring, Backup #225	101283247
12	O-Ring, #218 Buna, 90 Duro	100001951
	O-Ring, #218 Viton, 95 Duro	100064830
	Backup, O-Ring, #218	101227694
*13	Kit, Booster Hardware	101232636
14	Charge - 11.0g ***MILLENNIUM***® HMX	101206251
	Charge - 11.0g RDX DP	100014493
15	Detonating Cord	See Appendix A
16	Detonator, Electric	See Det. Section
17	Teflon Grommet	100157596
18	Bi-Directional Booster	See Appendix A
19	End Seal	100005251

* Included in shipping assembly.
**Teflon is a trademark of E.I. Dupont De Nemours.

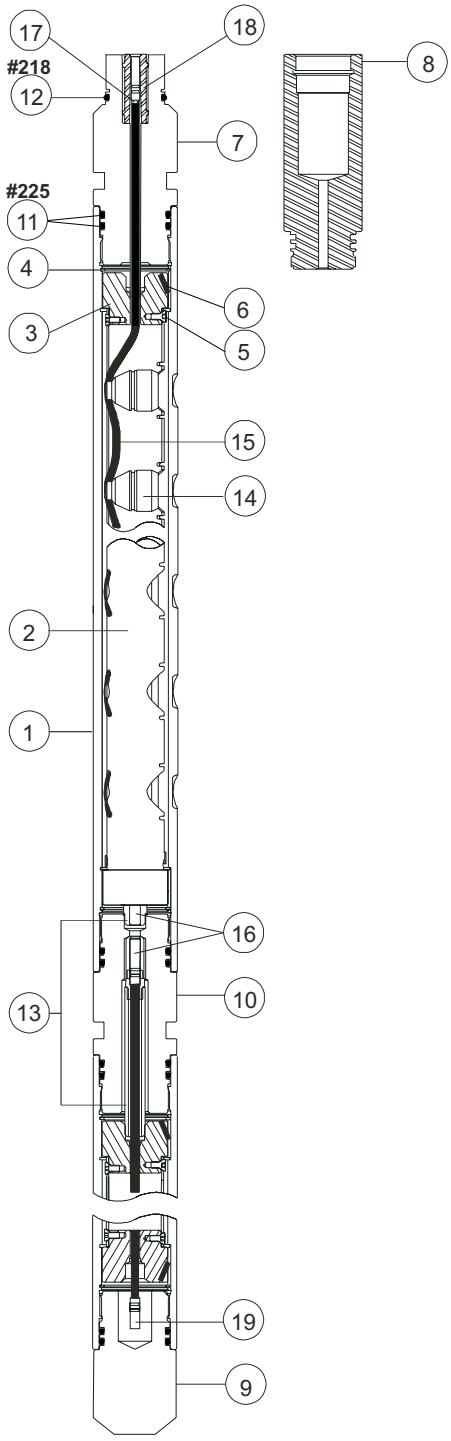

2 $^1/_2$-in. 4-spf 0° Scalloped System

2 $^1/_2$-in. 4-spf 0° Scalloped System

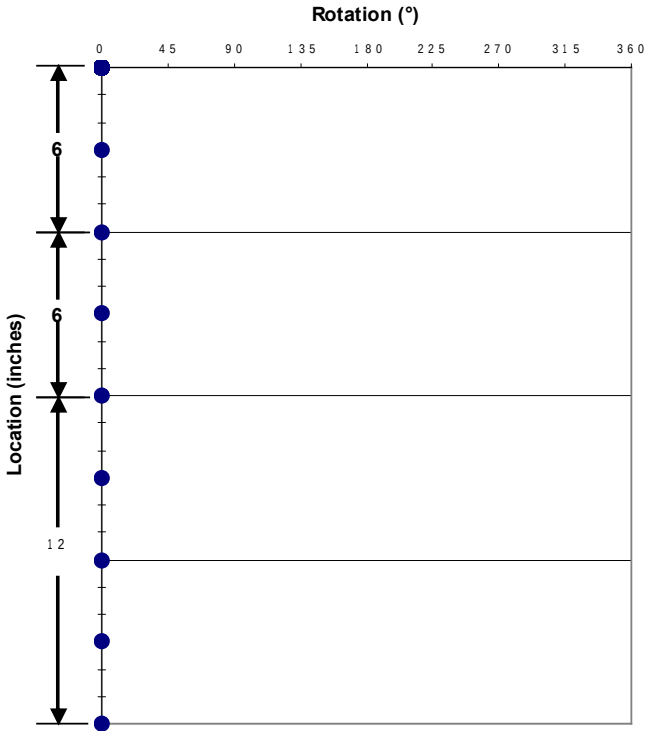

Shot Pattern for 2.5-in.
4-spf 0° Phasing

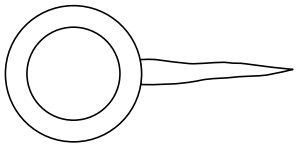

0° Phasing
1 Perforation Plane

JRC Gun Weights

Length ft (m)	4 (1.22)	7 (2.13)	11 (3.35)	15 (4.57)	21 (6.4)
Loaded lb (kg)	32 (15)	56 (25)	87 (40)	118 (54)	165 (75)
Spacer lb (kg)	26 (12)	43 (20)	67 (30)	90 (40)	125 (57)

2 $^1/_2$-in. 4-spf 60° Scalloped System

Item	Description	Part No.
	Shipping Assembly - 4ft	101280052
	Shipping Assembly - 7ft	101280053
	Shipping Assembly - 11ft	101280054
	Shipping Assembly - 15ft	101280055
	Shipping Assembly - 21ft	101280056
*1	Gun, Scallop - 4ft	101280043
	Gun, Scallop - 7ft	101280044
	Gun, Scallop - 11ft	101580045
	Gun, Scallop - 15ft	101280046
	Gun, Scallop - 21ft	101280042
*2	Tube, Charge Holder - 4ft	101280778
	Tube, Charge Holder - 7ft	101280780
	Tube, Charge Holder - 11ft	101280781
	Tube, Charge Holder - 15ft	101280782
	Tube, Charge Holder - 21ft	101280783
*3	Fixture, Alignment	101236334
*4	Snap Ring	101236797
*5	Screw, Socket #10 x.38" L	101273974
*6	Screw, Set #10 x .50" L	100028832
7	Firing Head Crossover - Vann	101211269
8	Firing Head Crossover - 'Go' Style	101283122
9	Bull Plug	101227806
10	Tandem, Grooved	101236893
11	O-Ring, #225 Buna, 90 Duro	100001996
	O-Ring, #225 Viton, 95 Duro	100003925
	O-Ring, Backup #225	101283247
12	O-Ring, #218 Buna, 90 Duro	100001951
	O-Ring, #218 Viton, 95 Duro	100064830
	Backup, O-Ring, #218	101227694
*13	Kit, Booster Hardware	101232636
14	Charge - 11.0g ***MILLENNIUM***® HMX	101206251
	Charge - 11.0g RDX DP	100014493
15	Detonating Cord	See Appendix A
16	Detonator, Electric	See Det. Section
17	Teflon Grommet	100157596
18	Bi-Directional Booster	See Appendix A
19	End Seal	100005251
20	Alignment Insert	100005255

* Included in shipping assembly.
**Teflon is a trademark of E.I. Dupont De Nemours.

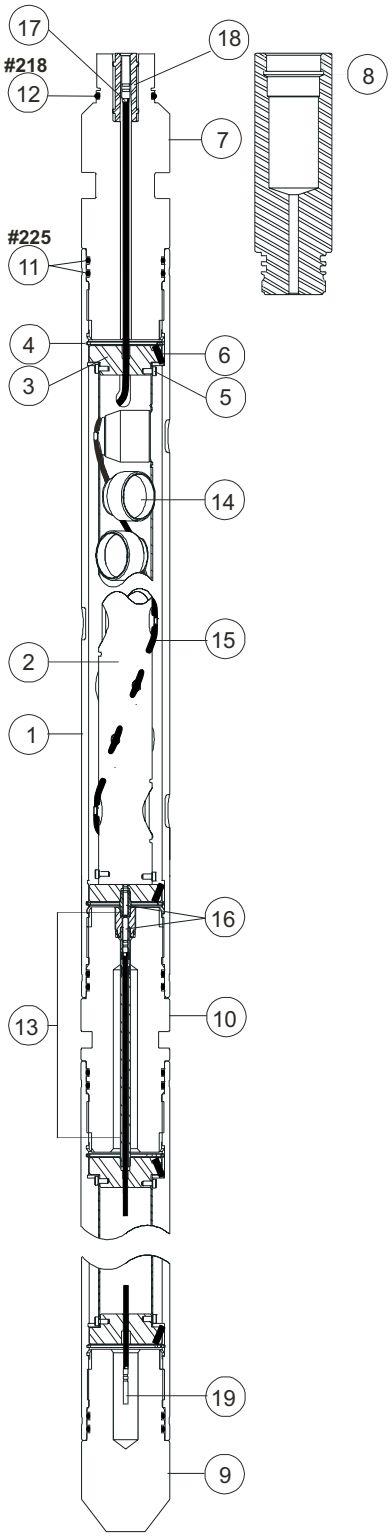

2 $^1/_2$-in. 4-spf 60° Scalloped System

2 $^1/_2$-in. 4-spf 60° Scalloped System

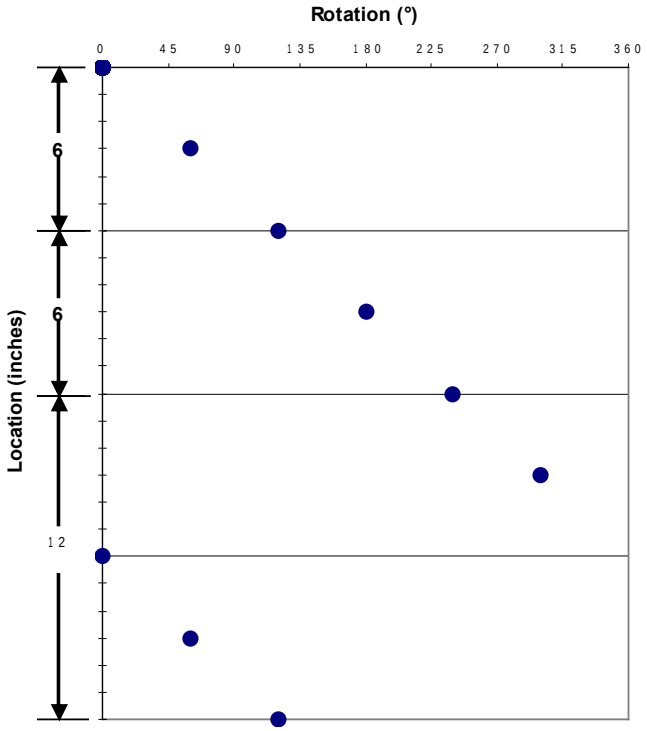

Shot Pattern for 2.5-in
4-spf 60° Phasing

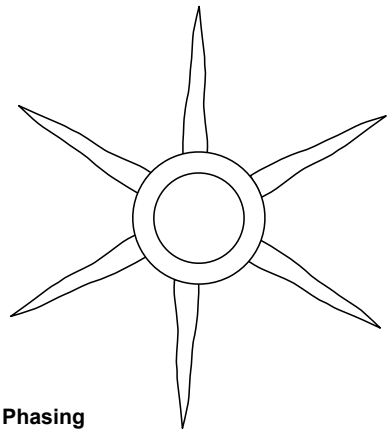

60° Phasing
6 Perforation Planes

JRC Gun Weights

Length ft (m)	4 (1.22)	7 (2.13)	11 (3.35)	15 (4.57)	21 (6.4)
Loaded lb (kg)	32 (15)	56 (25)	87 (40)	118 (54)	165 (75)
Spacer lb (kg)	26 (12)	43 (20)	67 (30)	90 (40)	125 (57)

2 $^1/_2$-in. 4-spf 90° Scalloped System

Item	Description	Part No.
	Shipping Assembly - 4ft	101280065
	Shipping Assembly - 7ft	101280066
	Shipping Assembly - 11ft	101280067
	Shipping Assembly - 15ft	101280068
	Shipping Assembly - 21ft	101280069
*1	Gun, Scallop - 4ft	101281455
	Gun, Scallop - 7ft	101281456
	Gun, Scallop - 11ft	101281457
	Gun, Scallop - 15ft	101281458
	Gun, Scallop - 21ft	101281459
*2	Tube, Charge Holder - 4ft	101281502
	Tube, Charge Holder - 7ft	101281503
	Tube, Charge Holder - 11ft	101281504
	Tube, Charge Holder - 15ft	101281505
	Tube, Charge Holder - 21ft	101281506
*3	Fixture, Alignment	101236334
*4	Snap Ring	101236797
*5	Screw, Socket #10 x.38" L	101273974
*6	Screw, Set #10 x .50" L	100028832
7	Firing Head Crossover - Vann	101211269
8	Firing Head Crossover - 'Go' Style	101283122
9	Bull Plug	101227806
10	Tandem, Grooved	101236893
11	O-Ring, #225 Buna, 90 Duro	100001996
	O-Ring, #225 Viton, 95 Duro	100003925
	O-Ring, Backup #225	101283247
12	O-Ring, #218 Buna, 90 Duro	100001951
	O-Ring, #218 Viton, 95 Duro	100064830
	Backup, O-Ring, #218	101227694
*13	Kit, Booster Hardware	101232636
14	Charge - 11.0g ***MILLENNIUM***® HMX	101206251
	Charge - 11.0g RDX DP	100014493
15	Detonating Cord	See Appendix A
16	Detonator, Electric	See Det. Section
17	Teflon Grommet	100157596
18	Bi-Directional Booster	See Appendix A
19	End Seal	100005251
20	Alignment Insert	100005255

* Included in shipping assembly.
**Teflon is a trademark of E.I. Dupont De Nemours.

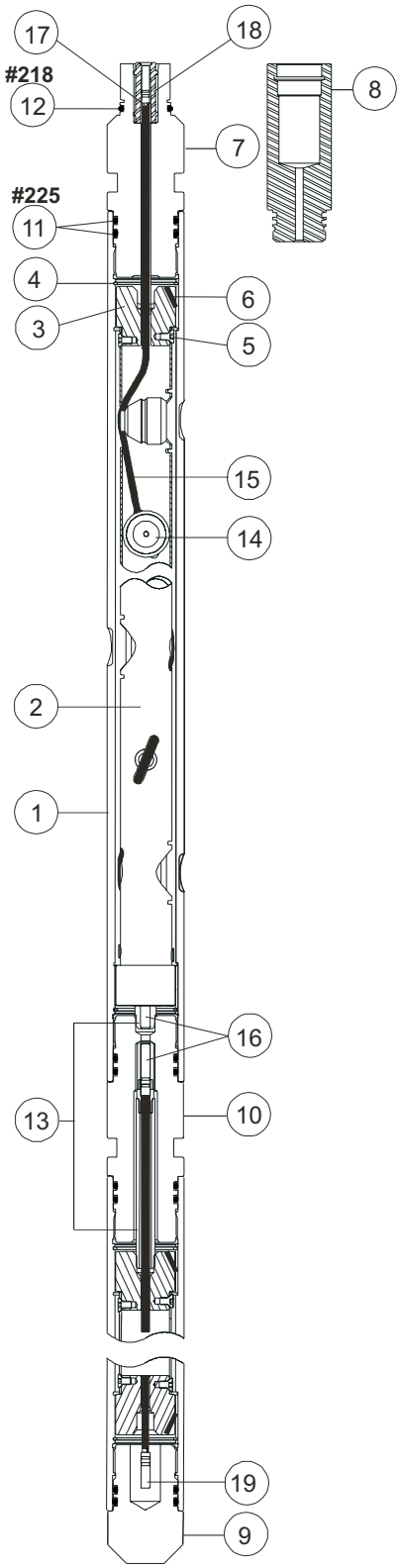

2 $^1/_2$-in. 4-spf 90° Scalloped System

2 $^1/_2$-in. 4-spf 90° Scalloped System

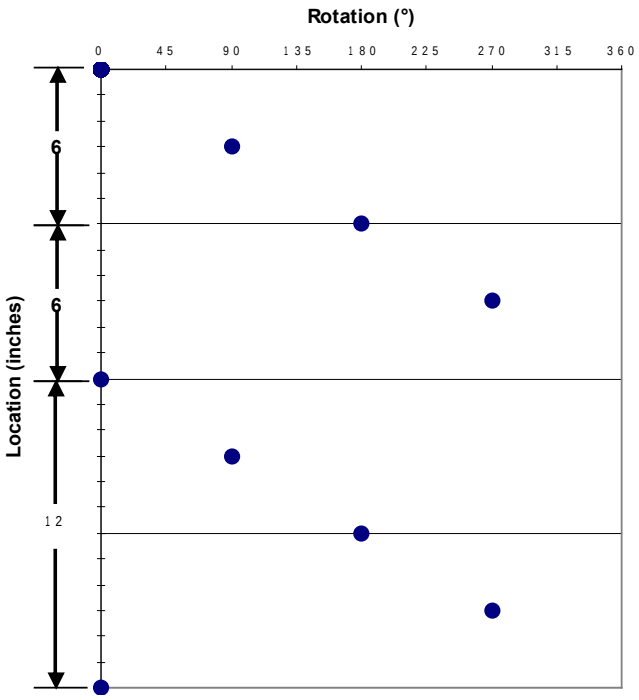

Shot Pattern for 2.5-in.
4-spf 90° Phasing

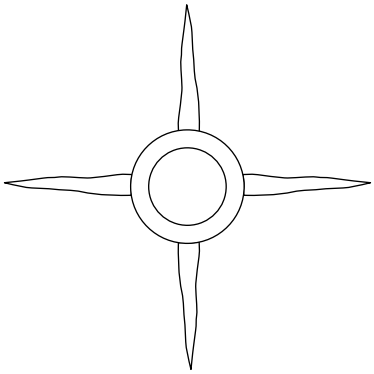

90° Phasing
4 Perforation Planes

JRC Gun Weights

Length ft (m)	4 (1.22)	7 (2.13)	11 (3.35)	15 (4.57)	21 (6.4)
Loaded lb (kg)	32 (15)	56 (25)	87 (40)	118 (54)	165 (75)
Spacer lb (kg)	26 (12)	43 (20)	67 (30)	90 (40)	125 (57)

2 $^1/_2$ in. 4-spf 180° Scalloped System

Item	Description	Part No.
	Shipping Assembly - 4ft	101235878
	Shipping Assembly - 7ft	101235880
	Shipping Assembly - 11ft	101235881
	Shipping Assembly - 15ft	101235883
	Shipping Assembly - 21ft	101235884
*1	Gun, Scallop - 4ft	101235863
	Gun, Scallop - 7ft	101235865
	Gun, Scallop - 11ft	101235866
	Gun, Scallop - 15ft	101235867
	Gun, Scallop - 21ft	101235868
*2	Tube, Charge Holder - 4ft	101235870
	Tube, Charge Holder - 7ft	101235872
	Tube, Charge Holder - 11ft	101235873
	Tube, Charge Holder - 15ft	101235875
	Tube, Charge Holder - 21ft	101235877
*3	Fixture, Alignment	101236334
*4	Snap Ring	101236797
*5	Screw, Socket #10 x.38" L	101273974
*6	Screw, Set #10 x .50" L	100028832
7	Firing Head Crossover - Vann	101211269
8	Firing Head Crossover - 'Go' Style	101283122
9	Bull Plug	101227806
10	Tandem, Grooved	101236893
11	O-Ring, #225 Buna, 90 Duro	100001996
	O-Ring, #225 Viton, 95 Duro	100003925
	O-Ring, Backup #225	101283247
12	O-Ring, #218 Buna, 90 Duro	100001951
	O-Ring, #218 Viton, 95 Duro	100064830
	Backup, O-Ring, #218	101227694
*13	Kit, Booster Hardware	101232636
14	Charge - 11.0g ***MILLENNIUM***® HMX	101206251
	Charge - 11.0g RDX DP	100014493
15	Detonating Cord	See Appendix A
16	Detonator, Electric	See Det. Section
17	Teflon Grommet	100157596
18	Bi-Directional Booster	See Appendix A
19	End Seal	100005251
20	Alignment Insert	100005255

* Included in shipping assembly.
**Teflon is a trademark of E.I. Dupont De Nemours.

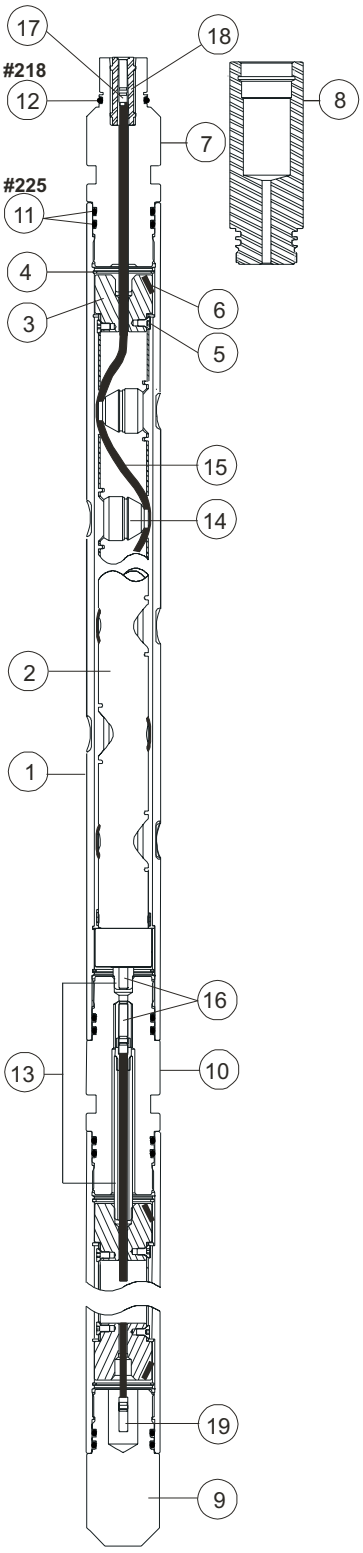

2 $^1/_2$-in. 4-spf 180° Scalloped System

2 $^{1}/_{2}$-in. 4-spf 180° Scalloped System

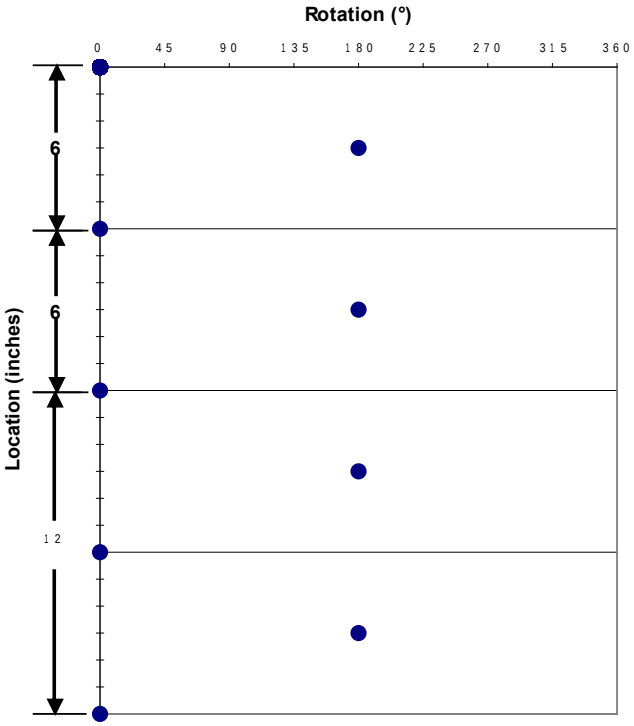

Shot Pattern for 2.5-in.
4-spf 180° Phasing

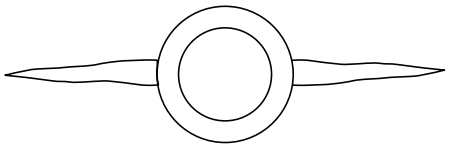

180° Phasing
2 Perforation Planes

JRC Gun Weights

Length ft (m)	4 (1.22)	7 (2.13)	11 (3.35)	15 (4.57)	21 (6.4)
Loaded lb (kg)	32 (15)	56 (25)	87 (40)	118 (54)	165 (75)
Spacer lb (kg)	26 (12)	43 (20)	67 (30)	90 (40)	125 (57)

2 $^1/_2$-in. 6-spf 0° Scalloped System

Item	Description	Part No.
	Shipping Assembly - 4ft	101295514
	Shipping Assembly - 7ft	101295515
	Shipping Assembly - 11ft	101295516
	Shipping Assembly - 15ft	101295517
	Shipping Assembly - 21ft	101295518
*1	Gun, Scallop - 4ft	101295519
	Gun, Scallop - 7ft	101295520
	Gun, Scallop - 11ft	101295521
	Gun, Scallop - 15ft	101295522
	Gun, Scallop - 21ft	101295523
*2	Tube, Charge Holder - 4ft	101295524
	Tube, Charge Holder - 7ft	101295525
	Tube, Charge Holder - 11ft	101295526
	Tube, Charge Holder - 15ft	101295527
	Tube, Charge Holder - 21ft	101295528
*3	Fixture, Alignment	101236334
*4	Snap Ring	101236797
*5	Screw, Socket #10 x.38" L	101273974
*6	Screw, Set #10 x .50" L	100028832
7	Firing Head Crossover - Vann	101211269
8	Firing Head Crossover - 'Go' Style	101283122
9	Bull Plug	101227806
10	Tandem, Grooved	101236893
11	O-Ring, #225 Buna, 90 Duro	100001996
	O-Ring, #225 Viton, 95 Duro	100003925
	O-Ring, Backup #225	101283247
12	O-Ring, #218 Buna, 90 Duro	100001951
	O-Ring, #218 Viton, 95 Duro	100064830
	Backup, O-Ring, #218	101227694
*13	Kit, Booster Hardware	101232636
14	Charge - 11.0g ***MILLENNIUM***® HMX	101206251
	Charge - 11.0g RDX DP	100014493
15	Detonating Cord	See Appendix A
16	Detonator, Electric	See Det. Section
17	Teflon Grommet	100157596
18	Bi-Directional Booster	See Appendix A
19	End Seal	100005251
20	Alignment Insert	100005255

* Included in shipping assembly.
**Teflon is a trademark of E.I. Dupont De Nemours.

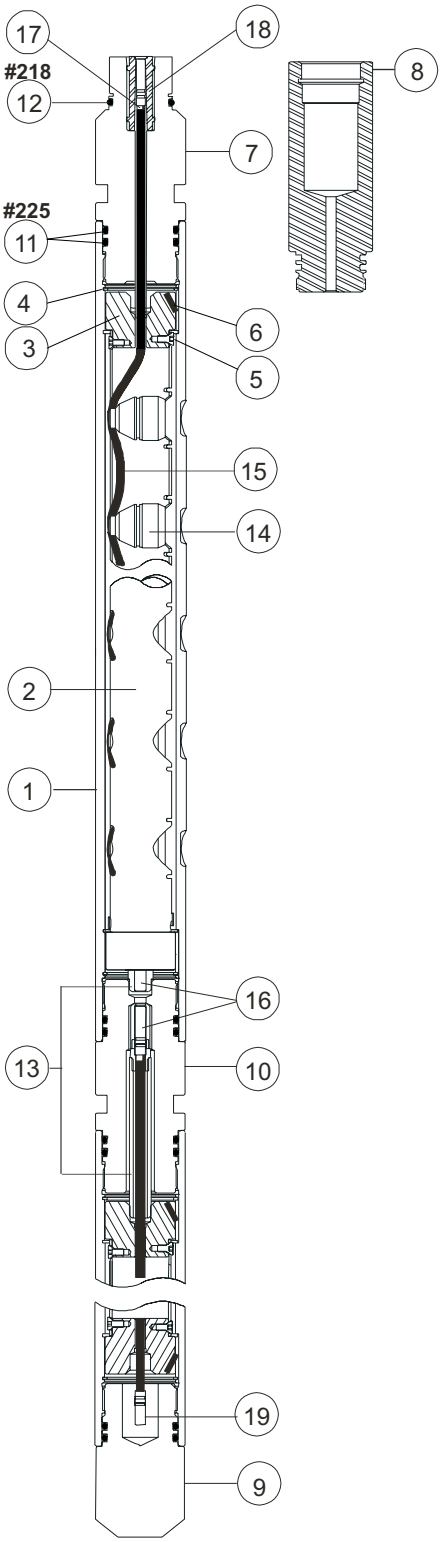

2 $^1/_2$-in. 6-spf 0° Scalloped System

2 $^1/_2$-in. 6-spf 0° Scalloped System

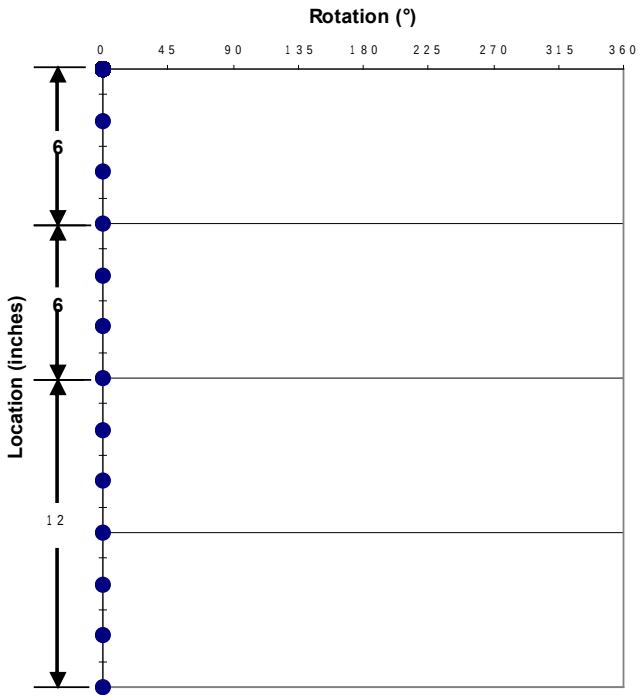

Shot Pattern for 2.5-in.
6-spf 0° Phasing

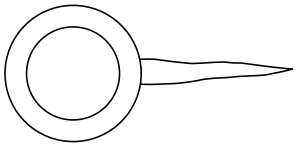

0° Phasing
1 Perforation Plane

JRC Gun Weights

Length ft (m)	4 (1.22)	7 (2.13)	11 (3.35)	15 (4.57)	21 (6.4)
Loaded lb (kg)	43 (19)	64 (29)	96 (44)	129 (59)	178 (81)
Spacer lb (kg)	32 (15)	47 (22)	74 (34)	97 (44)	134 (61)

2 $^1/_2$-in. 6-spf 60° Scalloped System

Item	Description	Part No.
	Shipping Assembly - 4ft	101280052
	Shipping Assembly - 7ft	101280053
	Shipping Assembly - 11ft	101280054
	Shipping Assembly - 15ft	101280055
	Shipping Assembly - 21ft	101280056
*1	Gun, Scallop - 4ft	101280043
	Gun, Scallop - 7ft	101280044
	Gun, Scallop - 11ft	101580045
	Gun, Scallop - 15ft	101280046
	Gun, Scallop - 21ft	101280042
*2	Tube, Charge Holder - 4ft	101280778
	Tube, Charge Holder - 7ft	101280780
	Tube, Charge Holder - 11ft	101280781
	Tube, Charge Holder - 15ft	101280782
	Tube, Charge Holder - 21ft	101280783
*3	Fixture, Alignment	101236334
*4	Snap Ring	101236797
*5	Screw, Socket #10 x.38" L	101273974
*6	Screw, Set #10 x .50" L	100028832
7	Firing Head Crossover - Vann	101211269
8	Firing Head Crossover - 'Go' Style	101283122
9	Bull Plug	101227806
10	Tandem, Grooved	101236893
11	O-Ring, #225 Buna, 90 Duro	100001996
	O-Ring, #225 Viton, 95 Duro	100003925
	O-Ring, Backup #225	101283247
12	O-Ring, #218 Buna, 90 Duro	100001951
	O-Ring, #218 Viton, 95 Duro	100064830
	Backup, O-Ring, #218	101227694
*13	Kit, Booster Hardware	101232636
14	Charge - 11.0g ***MILLENNIUM***® HMX	101206251
	Charge - 11.0g RDX DP	100014493
15	Detonating Cord	See Appendix A
16	Detonator, Electric	See Det. Section
17	Teflon Grommet	100157596
18	Bi-Directional Booster	See Appendix A
19	End Seal	100005251

* Included in shipping assembly.
**Teflon is a trademark of E.I. Dupont De Nemours.

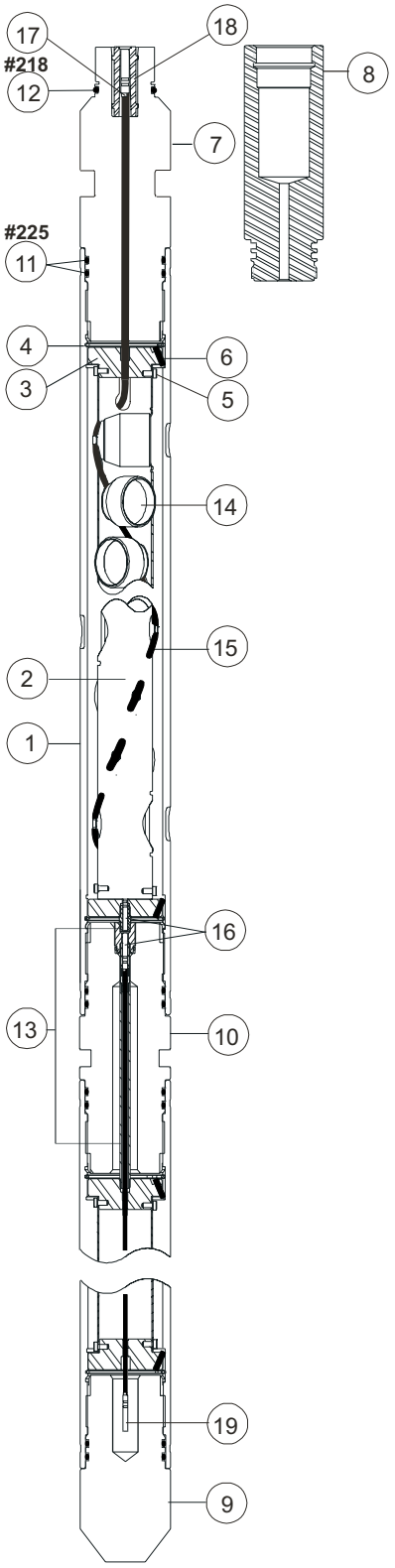

2 $^1/_2$-in. 6-spf 60° Scalloped System

2 $^1/_2$-in. 6-spf 60° Scalloped System

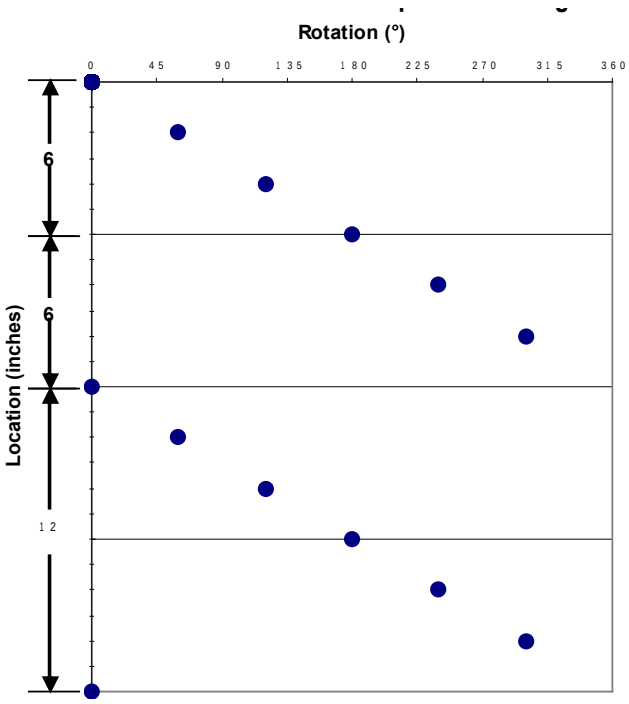

Shot Pattern for 2.5-in.
6-spf 60° Phasing

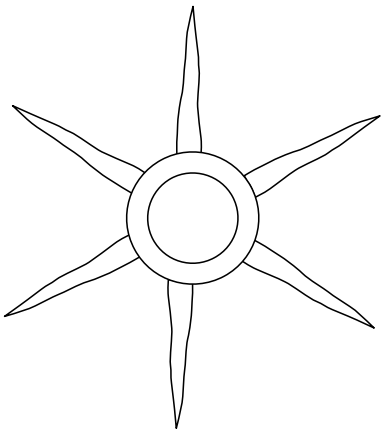

60° Phasing
6 Perforation Planes

JRC Gun Weights

Length ft (m)	4 (1.22)	7 (2.13)	11 (3.35)	15 (4.57)	21 (6.4)
Loaded lb (kg)	43 (19)	64 (29)	96 (44)	129 (59)	178 (81)
Spacer lb (kg)	32 (15)	47 (22)	74 (34)	97 (44)	134 (61)

2 $^{3}/_{4}$-in. 6-spf 60° Scalloped System

Item	Description	Part No.
	Shipping Assembly - 4 ft	101245391
	Shipping Assembly - 7ft	101245392
	Shipping Assembly - 11ft	101245394
	Shipping Assembly - 15ft	101245395
	Shipping Assembly - 21ft	101245396
*1	Gun, Scallop - 4ft	101245346
	Gun, Scallop - 7ft	101245347
	Gun, Scallop - 11ft	101245348
	Gun, Scallop - 15ft	101245349
	Gun, Scallop - 21ft	101245350
*2	Tube, Charge Holder - 4ft	101245335
	Tube, Charge Holder - 7ft	101245340
	Tube, Charge Holder - 11ft	101245341
	Tube, Charge Holder - 15ft	101245342
	Tube, Charge Holder - 21ft	101245343
*3	Fixture, Alignment	101245383
*4	Snap Ring	101245401
*5	Screw, Cap #10 x .38" L	101236979
*6	Screw, Set 0.25" D x 0.50" L	100028808
7	Firing Head Crossover - Vann	100005261
8	Firing Head Crossover - 'Go' Style	101283080
9	Bull Plug	100005267
10	Tandem, Grooved	101245370
11	O-Ring, #329 Buna, 90 Duro	100001957
	O-Ring, #329 Viton, 95 Duro	100009538
12	O-Ring, #329 Buna, 90 Duro	100001957
	O-Ring, #329 Viton, 95 Duro	100009538
13	Backup, O-Ring #329 (Hostile Environment)	100005401
*14	Kit, Booster Hardware	101232002
15	Charge - ***MILLENNIUM***® HMX	101233817
16	Detonating Cord	See Appendix A
17	Detonator, Electric	See Appendix D
18	Alignment Insert	100005255
19	Bi-Directional Booster	See Appendix A
20	End Seal	100005251

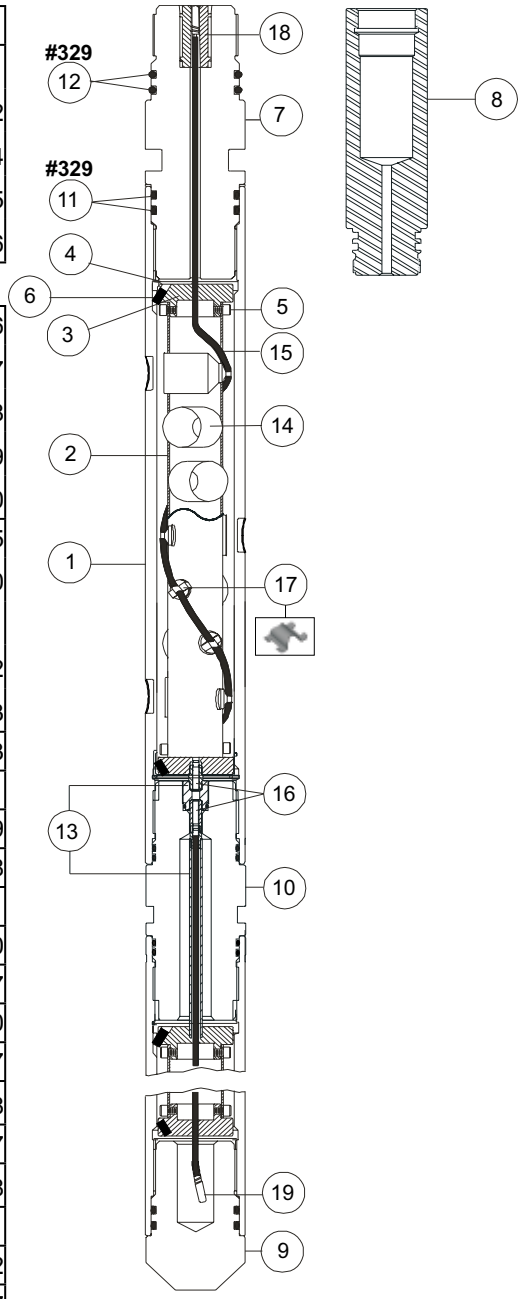

2 $^{3}/_{4}$-in. 6-spf 60° Scalloped System

* Included in shipping assembly.

2 $^{3}/_{4}$-in. 6-spf 60° Scalloped System

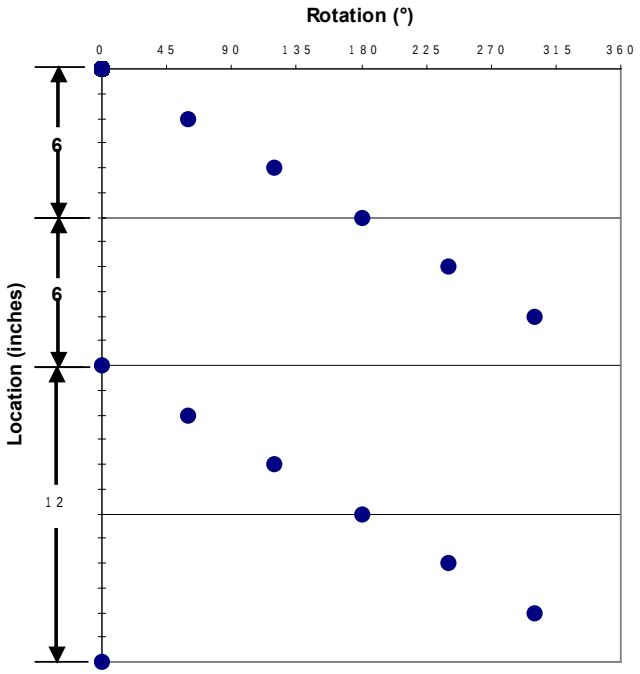

Shot Pattern for 2.75-in.
6-spf 60° Phasing

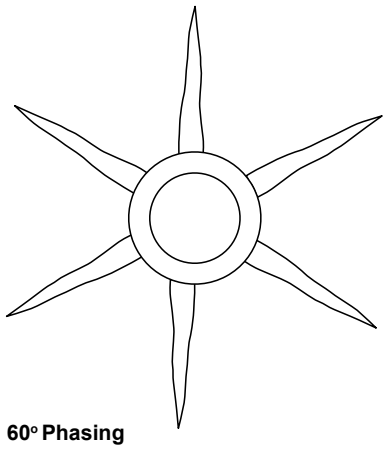

60° Phasing
6 Perforation Planes

JRC Gun Weights

Length ft (m)	4 (1.22)	7 (2.13)	11 (3.35)	15 (4.57)	21 (6.4)
Loaded lb (kg)	40 (18)	71 (32)	113 (51)	155 (70)	218 (90)
Spacer lb (kg)	31 (14)	54 (25)	95 (39)	116 (54)	162 (73)

2 7/8-in. 6-spf 60° Scalloped System

Item	Description	Part No.
	Shipping Assembly - 4ft	101244579
	Shipping Assembly - 7ft	101244580
	Shipping Assembly - 11ft	101244581
	Shipping Assembly - 15ft	101244582
	Shipping Assembly - 21ft	101244583
*1	Gun, Scallop - 4ft	101244568
	Gun, Scallop - 7ft	101244569
	Gun, Scallop - 11ft	101244570
	Gun, Scallop - 15ft	101244571
	Gun, Scallop - 21ft	101244572
*2	Tube, Charge Holder - 4ft	101245335
	Tube, Charge Holder - 7ft	101245340
	Tube, Charge Holder - 11ft	101245341
	Tube, Charge Holder - 15ft	101245342
	Tube, Charge Holder - 21ft	101245343
*3	Fixture, Alignment	101244584
*4	Snap Ring	101246147
*5	Screw, Cap #10 x 0.38" L	101236979
*6	Screw, Set 0.25" D x 0.625" L	100007783
7	Firing Head Crossover - Vann	101245523
8	Firing Head Crossover - 'Go' Style	101283058
9	Bull Plug	101246199
10	Tandem, Grooved	101244714
11	O-Ring, #228 Buna, 90 Duro	100001999
	O-Ring, #228 Viton, 95 Duro	100012311
12	O-Ring, #329 Buna, 90 Duro	100001957
	O-Ring, #329 Viton, 95 Duro	100009538
13	Backup, O-Ring #228 (Hostile Environment)	101283258
*14	Kit, Booster Hardware	101232002
15	Charge - ***MILLENNIUM*** HMX	101233817
16	Detonating Cord	See Appendix A
17	Detonator, Electric	See Appendix D
18	Alignment Insert	100005255
19	Bi-Directional Booster	See Appendix A
20	End Seal	100005251
21	Charge Clip	100157947

* Included in shipping assembly.

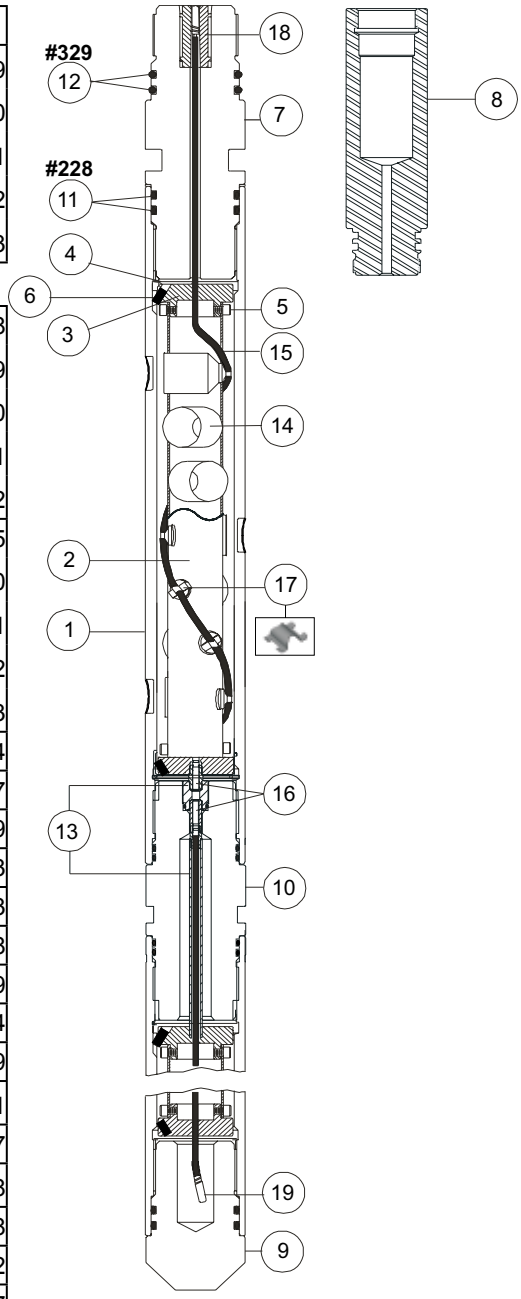

2 7/8-in. 6-spf 60° Scalloped System

2 $^{7}/_{8}$-in. 6-spf 60° Scalloped System

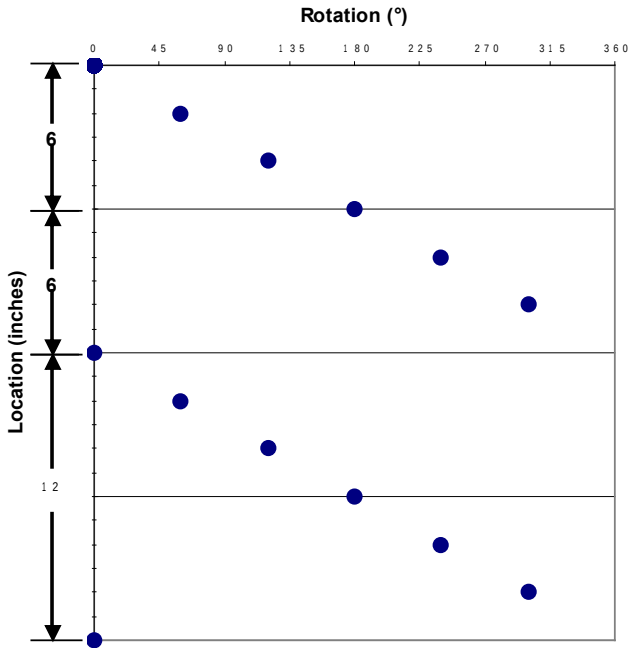

Shot Pattern for 2.875-in.
6-spf 60° Phasing

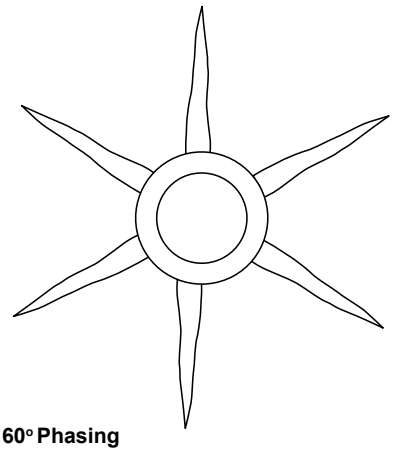

60° Phasing
6 Perforation Planes

JRC Gun Weights

Length ft (m)	4 (1.22)	7 (2.13)	11 (3.35)	15 (4.57)	21 (6.4)
Loaded lb (kg)	40 (18)	71 (32)	113 (51)	155 (70)	218 (90)
Spacer lb (kg)	31 (14)	54 (25)	95 (39)	116 (54)	162 (73)

3 $^{3}/_{8}$-in. 6-spf 60° SDP Scalloped System

Item	Description	Part No.
	Shipping Assembly - 4ft	101245703
	Shipping Assembly - 7ft	101245748
	Shipping Assembly - 11ft	101245749
	Shipping Assembly - 15ft	101245750
	Shipping Assembly - 21ft	101245751
*1	Gun, Scallop - 4ft	101240047
	Gun, Scallop - 7ft	101240048
	Gun, Scallop - 11ft	101240049
	Gun, Scallop - 15ft	101240050
	Gun, Scallop - 21ft	101240052
*2	Tube, Charge Holder - 4ft	101245643
	Tube, Charge Holder - 7ft	101245645
	Tube, Charge Holder - 11ft	101245646
	Tube, Charge Holder - 15ft	101245647
	Tube, Charge Holder - 21ft	101245649
*3	Fixture, Alignment	101245525
*4	Snap Ring	101245403
*5	Screw, Cap #10 x .38” L	101236979
*6	Screw, Set .25” D x .625” L	100007783
7	Firing Head Crossover - Vann	101245889
8	Firing Head Crossover - ‘Go’ Style	101251161
9	Bull Plug	101245921
10	Tandem, Grooved	101245924
11	O-Ring, #333 Buna, 90 Duro	100001962
	O-Ring, #333 Viton, 95 Duro	100064839
12A	O-Ring, #334 Buna, 90 Duro	100001963
	O-Ring, #334 Viton, 95 Duro	100009382
12B	O-Ring, #230 Buna, 90 Duro	100002001
13	Backup, O-Ring #333 (Hostile Environment)	101283261
13A	Backup, O-Ring #334 (Hostile Environment)	100005381
*14	Kit, Booster Hardware	101232637
15	Charge - ***MILLENNIUM*** HMX	101233819
	Charge - RDX SDP	100008014
	Charge - HMX SDP	100008249
	Charge - PYX SDP	100008015
16	Detonating Cord	See Appendix A
17	Detonator, Electric	See Appendix D
18	Alignment Insert	100005255
19	Bi-Directional Booster	See Appendix A
20	End Seal	100005251
21	Charge Clip	100005336

* Included in shipping assembly.

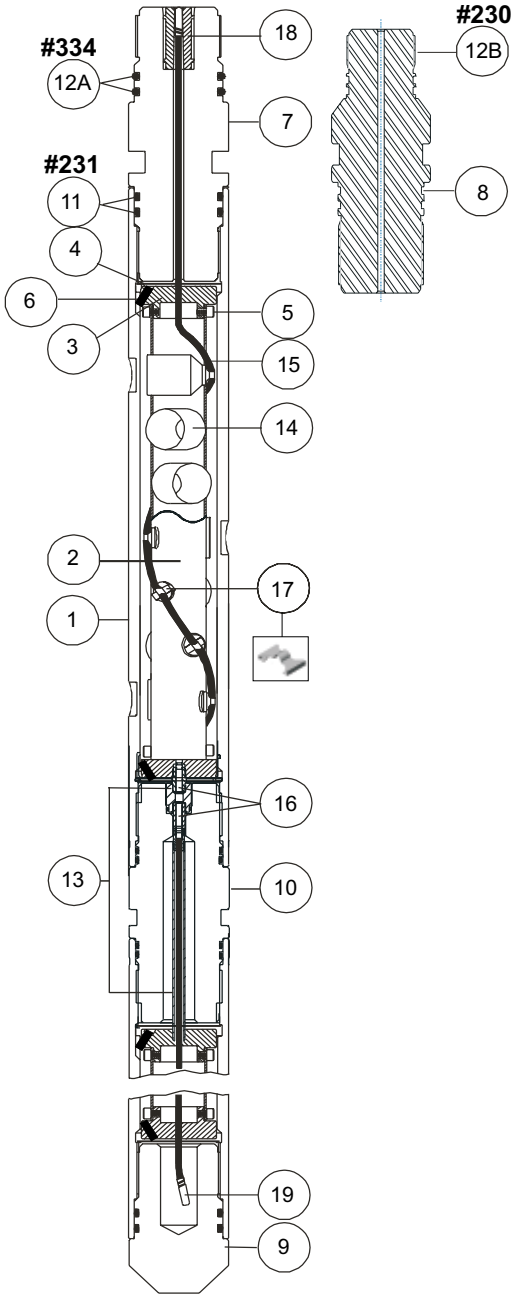

3 $^{3}/_{8}$-in. 6-spf 60° SDP Scalloped System

3 $^{3}/_{8}$-in. 6-spf 60° SDP Scalloped System

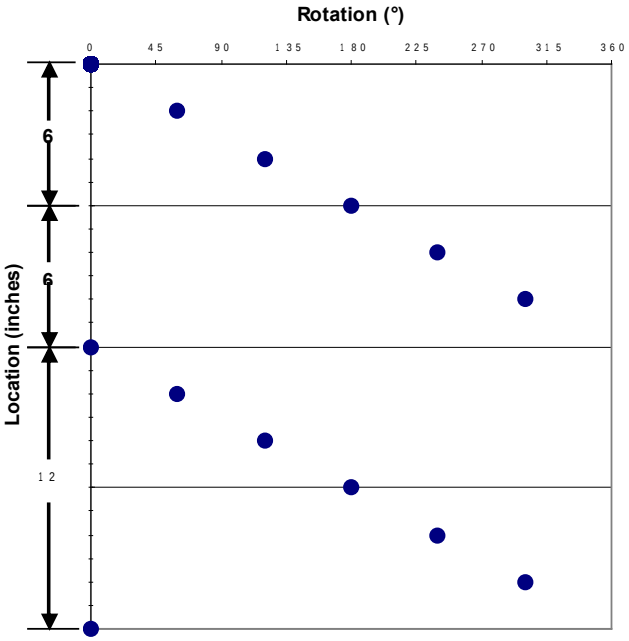

Shot Pattern for 3.375-in.
6-spf 60° Phasing

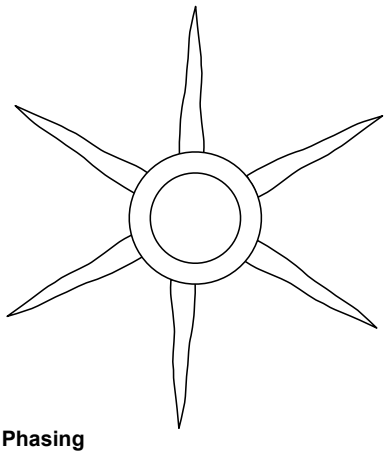

60° Phasing
6 Perforation Planes

JRC Gun Weights

Length ft (m)	4 (1.22)	7 (2.13)	11 (3.35)	15 (4.57)	21 (6.4)
Loaded lb (kg)	62 (28)	111 (51)	177 (80)	243 (110)	342 (155)
Spacer lb (kg)	47 (21)	81 (37)	127 (57)	172 (78)	241 (109)

3 $^{3}/_{8}$-in. 6-spf 60° Scalloped System

Item	Description	Part No.
	Shipping Assembly - 4ft	101289051
	Shipping Assembly - 7ft	101289052
	Shipping Assembly - 11ft	101289053
	Shipping Assembly - 15ft	101289054
	Shipping Assembly - 21ft	101289055
*1	Gun, Scallop - 4ft	101240047
	Gun, Scallop - 7ft	101240048
	Gun, Scallop - 11ft	101240049
	Gun, Scallop - 15ft	101240050
	Gun, Scallop - 21ft	101240052
*2	Tube, Charge Holder - 4ft	101289006
	Tube, Charge Holder - 7ft	101289009
	Tube, Charge Holder - 11ft	101289011
	Tube, Charge Holder - 15ft	101289012
	Tube, Charge Holder - 21ft	101289013
*3	Fixture, Alignment	101245525
*4	Snap Ring	101245403
*5	Screw, Cap #10 x .38” L	101236979
*6	Screw, Set .25” D x .625” L	100007783
7	Firing Head Crossover - Vann	101245889
8	Firing Head Crossover - ‘Go’ Style	101251161
9	Bull Plug	101245921
10	Tandem, Grooved	101245924
11	O-Ring, #333 Buna, 90 Duro	100001962
	O-Ring, #333 Viton, 95 Duro	100064839
12A	O-Ring, #334 Buna, 90 Duro	100001963
	O-Ring, #334 Viton, 95 Duro	100009382
12B	O-Ring, #230 Buna, 90 Duro	100002001
13	Backup, O-Ring #333 (Hostile Environment)	101283261
13A	Backup, O-Ring #334 (Hostile Environment)	100005381
*14	Kit, Booster Hardware	101232637
15	Charge - RDX BH	100005321
	Charge - HMX BH	100157017
	Charge - RDX DP	100005333
	Charge - HMX DP	100005332
16	Detonating Cord	See Appendix A
17	Detonator, Electric	See Appendix D
18	Alignment Insert	100005255
19	Bi-Directional Booster	See Appendix A
20	End Seal	100005251
21	Charge Clip	100156506

* Included in shipping assembly.

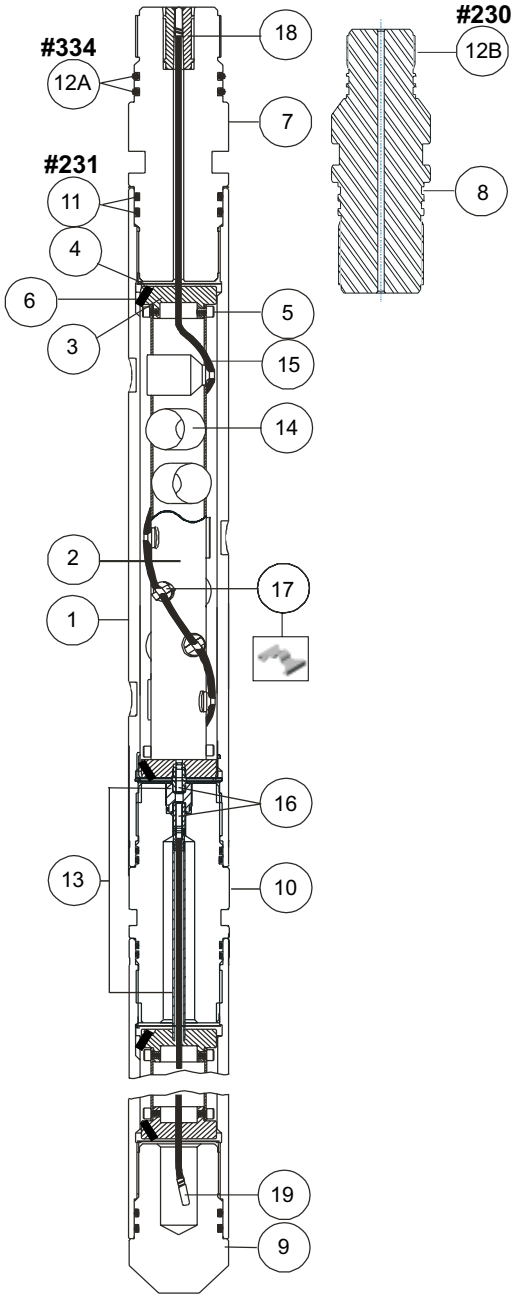

3 $^{3}/_{8}$-in. 6-spf 60° Scalloped System

3 $^{3}/_{8}$-in. 6-spf 60° Scalloped System

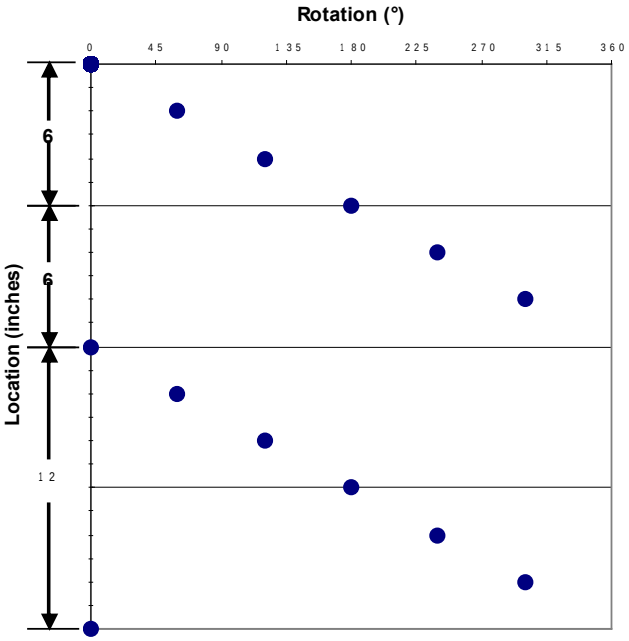

Shot Pattern for 3.375-in.
6-spf 60° Phasing

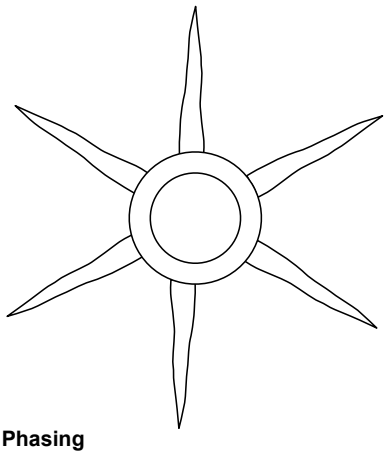

60° Phasing
6 Perforation Planes

JRC Gun Weights

Length ft (m)	4 (1.22)	7 (2.13)	11 (3.35)	15 (4.57)	21 (6.4)
Loaded lb (kg)	62 (28)	111 (51)	177 (80)	243 (110)	342 (155)
Spacer lb (kg)	47 (21)	81 (37)	127 (57)	172 (78)	241 (109)

3 $^{3}/_{8}$-in. 4-spf 90° Scalloped System

Item	Description	Part No.
	Shipping Assembly - 4ft	101290854
	Shipping Assembly - 7ft	101290857
	Shipping Assembly - 11ft	101290858
	Shipping Assembly - 15ft	101290859
	Shipping Assembly - 21ft	101290860
*1	Gun, Scallop - 4ft	101290861
	Gun, Scallop - 7ft	101290862
	Gun, Scallop - 11ft	101290864
	Gun, Scallop - 15ft	101290865
	Gun, Scallop - 21ft	101290866
*2	Tube, Charge Holder - 4ft	101290874
	Tube, Charge Holder - 7ft	101290880
	Tube, Charge Holder - 11ft	101290881
	Tube, Charge Holder - 15ft	101290882
	Tube, Charge Holder - 21ft	101290883
*3	Fixture, Alignment	101245525
*4	Snap Ring	101245403
*5	Screw, Cap #10 x .38" L	101236979
*6	Screw, Set .25" D x .625" L	100007783
7	Firing Head Crossover - Vann	101245889
8	Firing Head Crossover - 'Go' Style	101251161
9	Bull Plug	101245921
10	Tandem, Grooved	101245924
11	O-Ring, #333 Buna, 90 Duro	100001962
	O-Ring, #333 Viton, 95 Duro	100064839
12A	O-Ring, #334 Buna, 90 Duro	100001963
	O-Ring, #334 Viton, 95 Duro	100009382
12B	O-Ring, #230 Buna, 90 Duro	100002001
13	Backup, O-Ring #333 (Hostile Environment)	101283261
13A	Backup, O-Ring #334 (Hostile Environment)	100005381
*14	Kit, Booster Hardware	101232637
15	Charge - ***MILLENNIUM*** HMX	101233819
	Charge - RDX SDP	100008014
	Charge - HMX SDP	100008249
	Charge - PYX SDP	100008015
	Charge - RDX SDP	100005322
	Charge - HMX SDP	100005327
16	Detonating Cord	See Appendix A
17	Detonator, Electric	See Appendix D
18	Alignment Insert	100005255
19	Bi-Directional Booster	See Appendix A

* Included in shipping assembly.

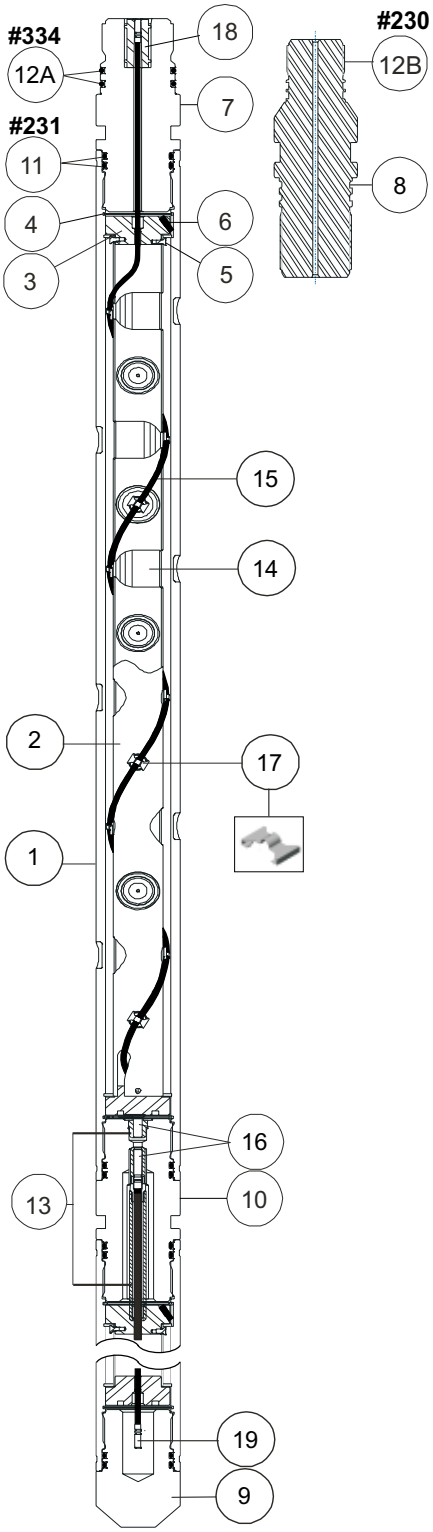

3 $^{3}/_{8}$-in. 4-spf 90° Scalloped System

3 $^{3}/_{8}$-in. 4-spf 90° Scalloped System

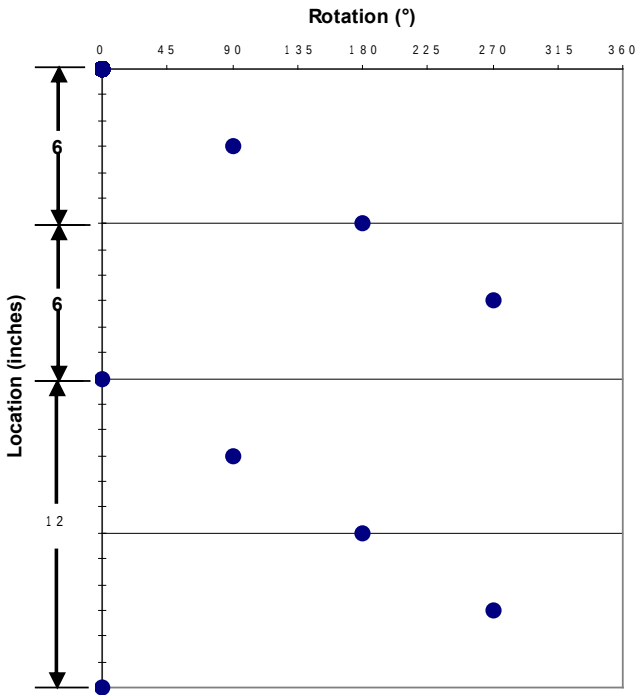

Shot Pattern for 3.375-in.
4-spf 90° Phasing

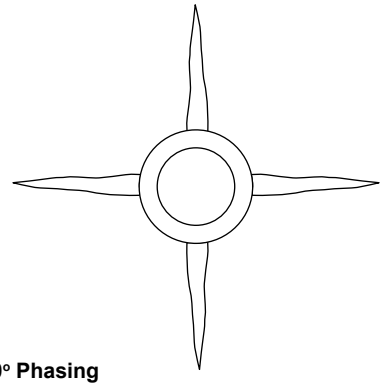

90° Phasing
4 Perforation Planes

JRC Gun Weights

Length ft (m)	4 (1.22)	7 (2.13)	11 (3.35)	15 (4.57)	21 (6.4)
Loaded lb (kg)	62 (28)	111 (51)	177 (80)	243 (110)	342 (155)
Spacer lb (kg)	47 (21)	81 (37)	127 (57)	172 (78)	241 (109)

3 $^{3}/_{8}$-in. 12-spf Omni™ System

Item	Description	Part No.
	Shipping Assembly - 4ft	101244646
	Shipping Assembly - 7ft	101244647
	Shipping Assembly - 11ft	101244649
	Shipping Assembly - 15ft	101244651
	Shipping Assembly - 21ft	101244653
*1	Gun, Scallop - 4ft	101244654
	Gun, Scallop - 7ft	101244655
	Gun, Scallop - 11ft	101244656
	Gun, Scallop - 15ft	101244657
	Gun, Scallop - 21ft	101244658
*2	Tube, Charge Holder - 4ft	101244659
	Tube, Charge Holder - 7ft	101244660
	Tube, Charge Holder - 11ft	101244662
	Tube, Charge Holder - 15ft	101244663
	Tube, Charge Holder - 21ft	101244664
*3	Fixture, Alignment	101245525
*4	Snap Ring	101245403
*5	Screw, Socket, #10 - 32 x .38” L	101236979
*6	Screw, Set .25-20 x .625” L	100007783
7	Firing Head Crossover - Vann	101245889
8	Firing Head Crossover - ‘Go’ Style	101251161
9	Bull Plug	101245921
10	Tandem, Grooved	101245924
11	O-Ring, #333 Buna, 90 Duro	100001962
	O-Ring, #333 Viton, 95 Duro	100064839
12A	O-Ring, #334 Buna, 90 Duro	100001963
	O-Ring, #334 Viton, 95 Duro	100009382
12B	O-Ring, #230 Buna, 90 Duro	100002001
13	Backup, O-Ring #333 (Hostile Environment)	101283261
13A	Backup, O-Ring #334 (Hostile Environment)	100005381
*14	Kit, Booster Hardware	101232637
15	Charge - Omni RDX BH	100008251
	Charge - Omni HMX BH	100005312
16	Detonating Cord	See Appendix A
17	Detonator, Electric	See Appendix D
18	Alignment Insert	100005255
19	Bi-Directional Booster	See Appendix A
20	End Seal	100005251

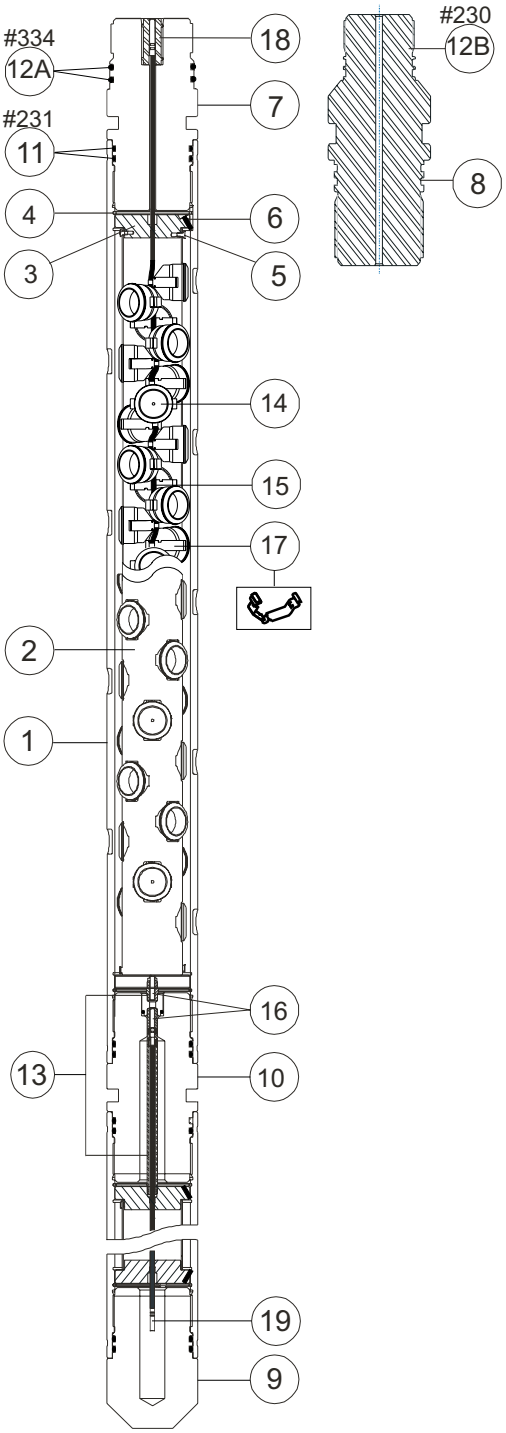

3 $^{3}/_{8}$-in. 12-spf Omni™ System

* Included in shipping assembly.

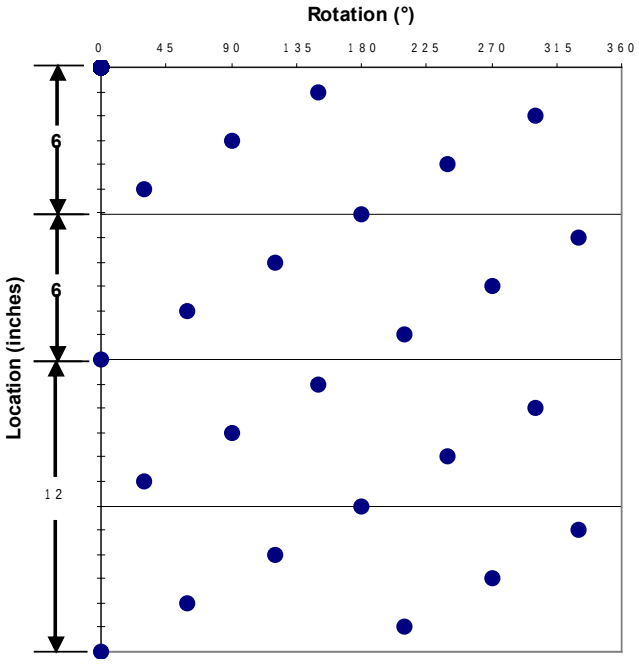

Shot Pattern for 3.375-in.
12-spf 150° Phasing

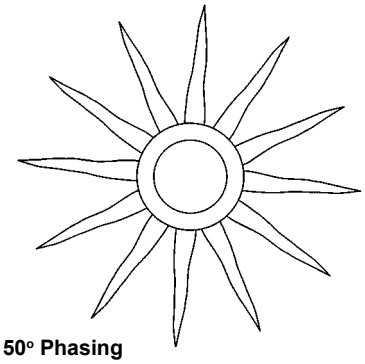

150° Phasing
12 Perforation Planes

JRC Gun Weights

Length ft (m)	4 (1.22)	7 (2.13)	11 (3.35)	15 (4.57)	21 (6.4)
Loaded lb (kg)	57 (26)	102 (46)	162 (74)	222 (101)	312 (142)
Spacer lb (kg)	46 (21)	79 (36)	124 (56)	168 (76)	235 (107)

4-in. 4-spf 90° Scalloped System

Item	Description	Part No.
	Shipping Assembly - 4ft	101231991
	Shipping Assembly - 7ft	101231992
	Shipping Assembly - 11ft	101231993
	Shipping Assembly - 15ft	101231994
	Shipping Assembly - 21ft	101231995
*1	Gun, Scallop - 4ft	101231986
	Gun, Scallop - 7ft	101231987
	Gun, Scallop - 11ft	101231988
	Gun, Scallop - 15ft	101231989
	Gun, Scallop - 21ft	101231990
*2	Tube, Charge Holder - 4ft	101231996
	Tube, Charge Holder - 7ft	101231997
	Tube, Charge Holder - 11ft	101231998
	Tube, Charge Holder - 15ft	101231999
	Tube, Charge Holder - 21ft	101232000
*3	Fixture Alignment	101232003
*4	Snap Ring	101232007
*5	Screw, Socket #10 x .50" D	100028191
*6	Screw, Set .25" D x .75" L	100028806
7	Firing Head Crossover - Vann	101232004
8	Firing Head Crossover - 'Go' Style	101236324
9	Bull Plug	101232006
10	Tandem, Grooved	101232005
11	O-Ring, #236 Buna, 90 Duro	100002007
	O-Ring, #236 Viton, 95 Duro	100003927
12A	O-Ring, #334 Buna, 90 Duro	100001963
	O-Ring, #334 Viton, 95 Duro	100009382
12B	O-Ring, #230 Buna, 90 Duro	100002001
13	Backup, O-Ring #236 (Hostile Environment)	101239616
13A	Backup, O-Ring #334 (Hostile Environment)	100005381
*14	Kit, Booster Hardware	101232002
15	Charge - ***MILLENNIUM*** HMX	101210636
16	Detonating Cord	See Appendix A
17	Detonator, Electric	See Appendix D
18	Alignment Insert	100005255
19	Bi-Directional Booster	See Appendix A
20	End Seal	100005251
21	Charge Clip	100157866

* Included in shipping assembly.

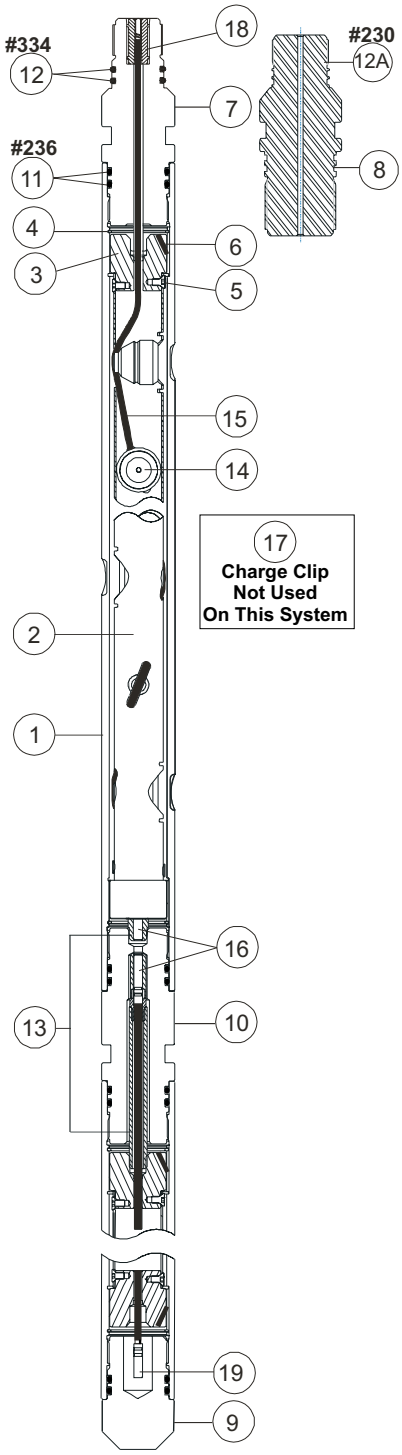

4-in. 4-spf 90° Scalloped System

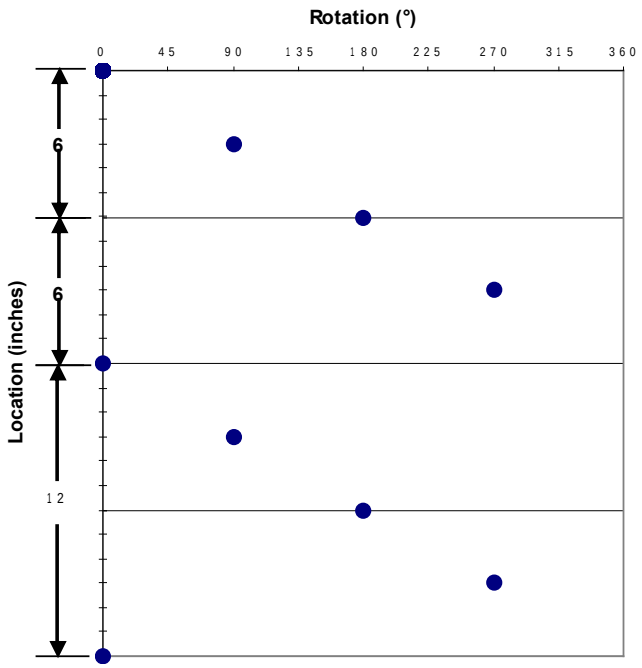

Shot Pattern for 4-in.
4-spf 90° Phasing

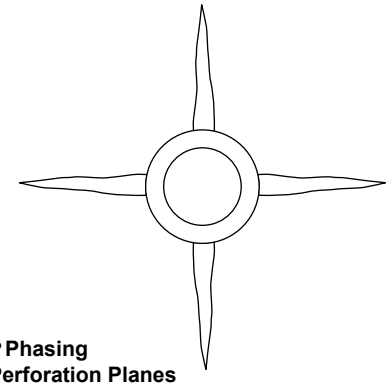

90° Phasing
4 Perforation Planes

JRC Gun Weights

Length ft (m)	4 (1.22)	7 (2.13)	11 (3.35)	15 (4.57)	21 (6.4)
Loaded lb (kg)	76 (34)	135 (61)	214 (92)	294 (133)	413 (187)
Spacer lb (kg)	58 (26)	100 (45)	156 (70)	216 (96)	295 (134)

4 $^1/_2$-in. 4-spf 90° Scalloped System

Item	Description	Part No.
	Shipping Assembly - 4ft	101273371
	Shipping Assembly - 7ft	101273372
	Shipping Assembly - 11ft	101273373
	Shipping Assembly - 15ft	101273374
	Shipping Assembly - 21ft	101273375
*1	Gun, Scallop - 4ft	101273345
	Gun, Scallop - 7ft	101273366
	Gun, Scallop - 11ft	101273367
	Gun, Scallop - 15ft	101273368
	Gun, Scallop - 21ft	101273369
*2	Tube, Charge Holder - 4ft	101273376
	Tube, Charge Holder - 7ft	101273377
	Tube, Charge Holder - 11ft	101273378
	Tube, Charge Holder - 15ft	101273379
	Tube, Charge Holder - 21ft	101275930
*3	Fixture Alignment	101232025
*4	Snap Ring	101232029
*5	Screw, Socket #10 x .50" D	100028191
*6	Screw, Set .25" D x .75" L	100028806
7	Firing Head Crossover - Vann	101232026
8	Firing Head Crossover - 'Go' Systems	101237399
9	Bull Plug	101232028
10	Tandem, Grooved	101232027
11	O-Ring, #342 Buna, 90 Duro	100001938
	O-Ring, #342 Viton, 95 Duro	100064811
	Backup, O-Ring #342	101283276
12A	O-Ring, #334 Buna, 90 Duro	100001963
	O-Ring, #334 Viton, 95 Duro	100009382
	Backup, O-Ring #334	100005381
12B	O-Ring, #230 Buna, 90 Duro	100002001
*13	Kit, Booster Hardware	101232024
14	Charge - 39g ***MILLENNIUM®***	101210636
15	Detonating Cord	See Appendix A
16	Detonator, Electric	See Det. Section
17	Alignment Insert	100005255
18	Bi-Directional Booster	See Appendix A
19	End Seal	100005251

* Included in shipping assembly.

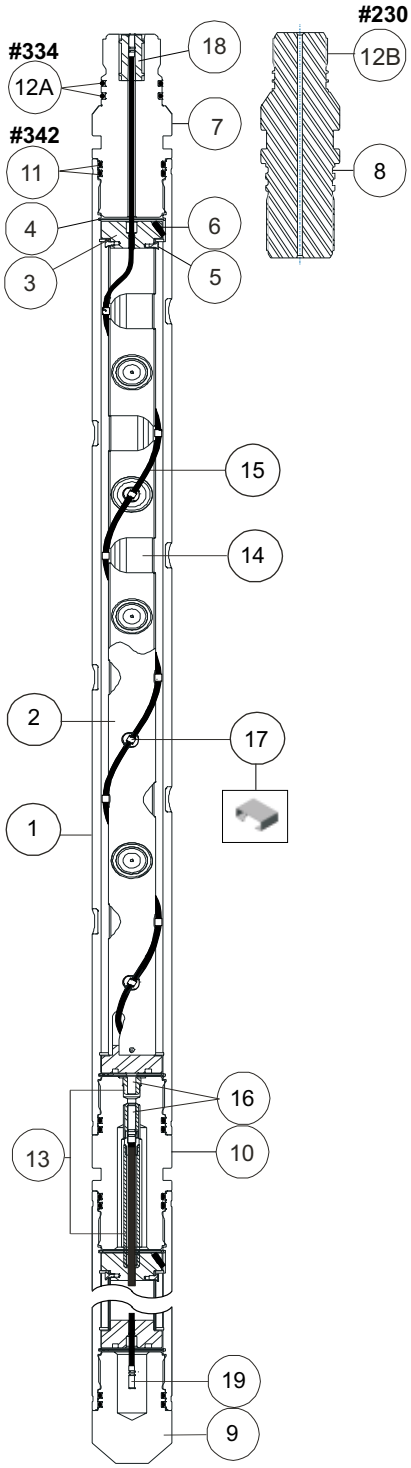

4 $^1/_2$-in. 4-spf 90° Scalloped System

4 $^1/_2$-in. 4-spf 90° Scalloped System

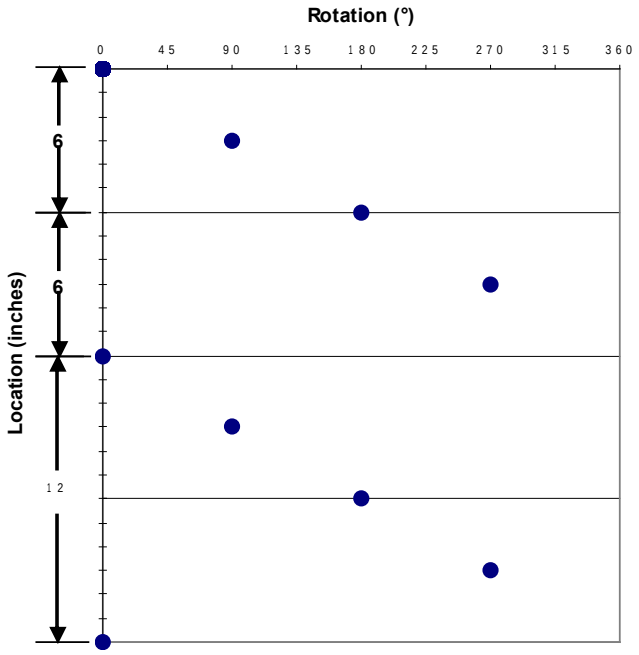

Shot Pattern for 4-in.
4-spf 90° Phasing

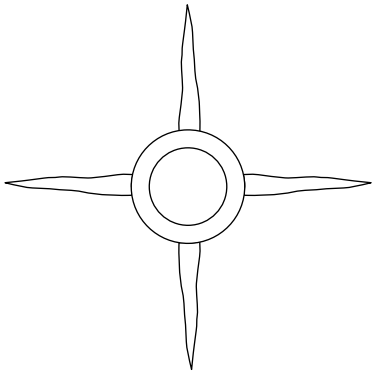

90° Phasing
4 Perforation Planes

JRC Gun Weights

Length ft (m)	4 (1.22)	7 (2.13)	11 (3.35)	15 (4.57)	21 (6.4)
Loaded lb (kg)	76 (34)	135 (61)	214 (92)	294 (133)	413 (187)
Spacer lb (kg)	58 (26)	100 (45)	156 (70)	216 (96)	295 (134)

4 $^1/_2$-in. 5-spf 60° Scalloped System

Item	Description	Part No.
	Shipping Assembly - 4ft	101232013
	Shipping Assembly - 7ft	101232014
	Shipping Assembly - 11ft	101232015
	Shipping Assembly - 15ft	101232016
	Shipping Assembly - 21ft	101232017
*1	Gun, Scallop - 4ft	101232008
	Gun, Scallop - 7ft	101232009
	Gun, Scallop - 11ft	101232010
	Gun, Scallop - 15ft	101232011
	Gun, Scallop - 21ft	101232012
*2	Tube, Charge Holder - 4ft	101232018
	Tube, Charge Holder - 7ft	101232019
	Tube, Charge Holder - 11ft	101232020
	Tube, Charge Holder - 15ft	101232021
	Tube, Charge Holder - 21ft	101232022
*3	Fixture Alignment	101232025
*4	Snap Ring	101232029
*5	Screw, Socket #10 x .50" D	100028191
*6	Screw, Set .25" D x .75" L	100028806
7	Firing Head Crossover - Vann	101232026
8	Firing Head Crossover - 'Go' Systems	101237399
9	Bull Plug	101232028
10	Tandem, Grooved	101232027
11	O-Ring, #342 Buna, 90 Duro	100001938
	O-Ring, #342 Viton, 95 Duro	100064811
12A	O-Ring, #334 Buna, 90 Duro	100001963
	O-Ring, #334 Viton, 95 Duro	100009382
12B	O-Ring, #230 Buna, 90 Duro	100002001
13	Backup, O-Ring #342 (Hostile Environment)	101283276
13A	Backup, O-Ring #334 (Hostile Environment)	100005381
*14	Kit, Booster Hardware	101232024
15	Charge - ***MILLENNIUM***	101210636
16	Detonating Cord	See Appendix A
17	Detonator, Electric	See Appendix D
18	Alignment Insert	100005255
19	Bi-Directional Booster	See Appendix A
20	End Seal	100005251

* Included in shipping assembly.

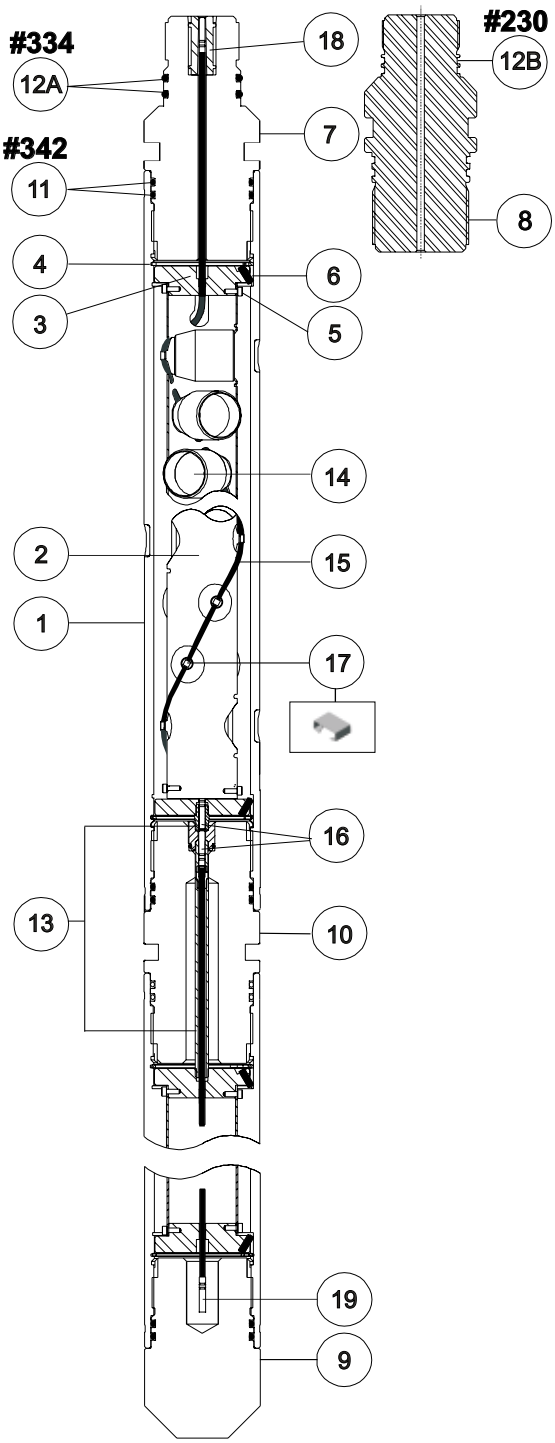

4 $^1/_2$-in. 5-spf 60° Scalloped System

4 $^1/_2$-in. 5-spf 60° Scalloped System

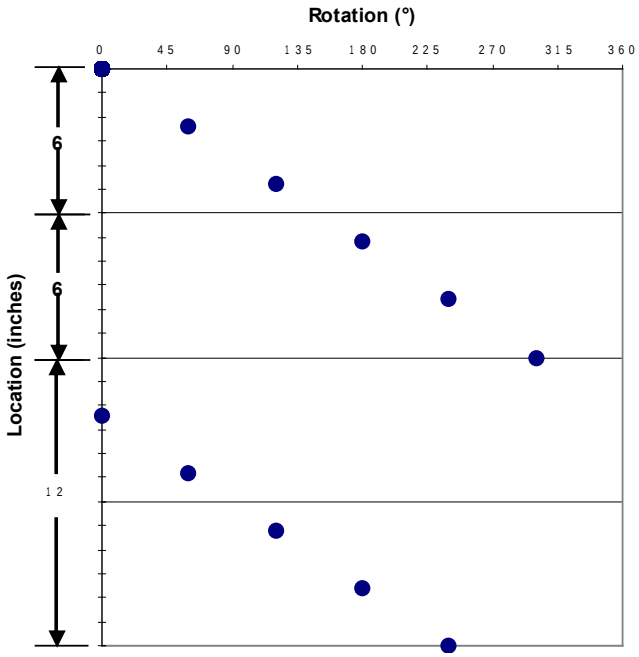

Shot Pattern for 4.-in.
4-spf 60° Phasing

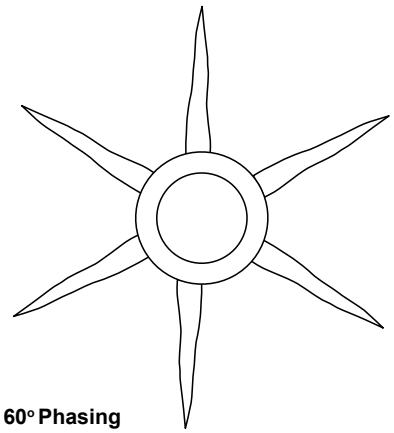

60° Phasing
6 Perforation Planes

JRC Gun Weights

Length ft (m)	4 (1.22)	7 (2.13)	11 (3.35)	15 (4.57)	21 (6.4)
Loaded lb (kg)	86 (39)	154 (69)	245 (111)	335 (152)	471 (213)
Spacer lb (kg)	65 (30)	113 (51)	176 (80)	239 (109)	334 (152)

4 $^{1}/_{2}$-in. 12-spf 45°/135° Scalloped System

Item	Description	Part No.
	Shipping Assembly - 4ft	101243823
	Shipping Assembly - 7ft	101243825
	Shipping Assembly - 11ft	101243826
	Shipping Assembly - 15ft	101243827
	Shipping Assembly - 21ft	101243828
*1	Gun, Scallop - 4ft	101240516
	Gun, Scallop - 7ft	101240520
	Gun, Scallop - 11ft	101240521
	Gun, Scallop - 15ft	101240522
	Gun, Scallop - 21ft	101240523
*2	Tube, Charge Holder - 4ft	101243782
	Tube, Charge Holder - 7ft	101243783
	Tube, Charge Holder - 11ft	101243784
	Tube, Charge Holder - 15ft	101243785
	Tube, Charge Holder - 21ft	101243786
*3	Fixture Alignment	101243709
*4	Snap Ring	101232029
*5	Screw, Socket #10 x .50" L	100028191
*6	Screw, Set 0.25" D x 0.75" L	100028806
7	Firing Head Crossover - Vann	101232026
8	Firing Head Crossover - 'Go' Systems	101237399
9	Bull Plug	101232028
10	Tandem, Grooved	101232027
11	O-Ring, #342 Buna, 90 Duro	100001938
	O-Ring, #342 Viton, 95 Duro	100064811
	Backup, O-Ring #342	101283276
12A	O-Ring, #334 Buna, 90 Duro	100001963
	O-Ring, #334 Viton, 95 Duro	100009382
	Backup, O-Ring #334	100005381
12B	O-Ring, #230 Buna, 90 Duro	100002001
*13	Kit, Booster Hardware	101232024
14	Charge - 22.7g ***MILLENNIUM***® HMX	101210674
	Charge - 22.7g Omni RDX DP	100005324
	Charge - 22.7g Omni RDX DP/LD	100005325
	Charge - 22.7g Omni HMX DP	100014352
	Charge - 22.7g Omni HMX DP/LD	100005340
	Charge - 25g Omni RDX BH	100005319
	Charge - 22.7gOmni RDX BH/LD	100005326
	Charge - 25g Omni HMX BH	100157006
15	Detonating Cord	See Appendix A
16	Detonator, Electric	See Det. Section
17	Alignment Insert	100005255
18	Bi-Directional Booster	See Appendix A
19	End Seal	100005251
20	Charge Clip	100157866

* Included in shipping assembly.

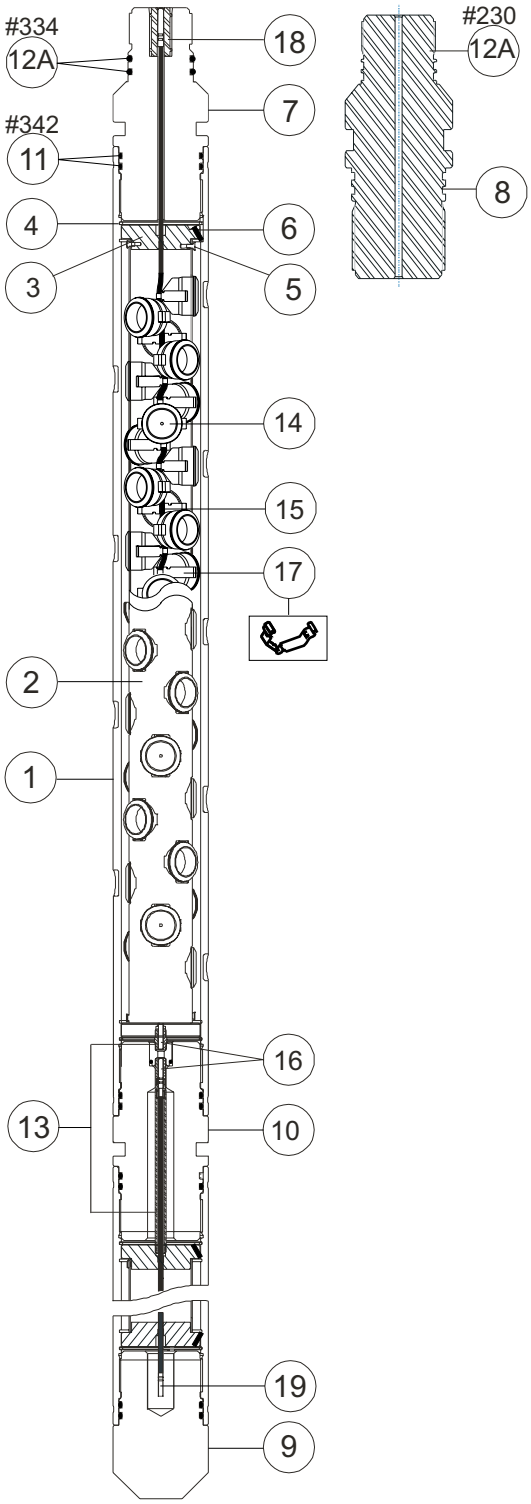

4 $^{1}/_{2}$-in. 12-spf 45°/135° Scalloped System

4 $^1/_2$-in. 12-spf 45°/135° Scalloped System

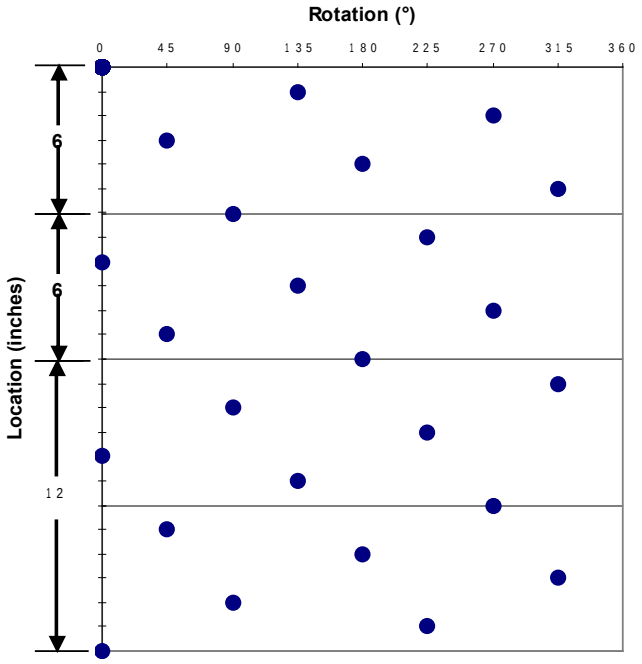

Shot Pattern for 4.5-in.
12-spf 45°/135° Phasing

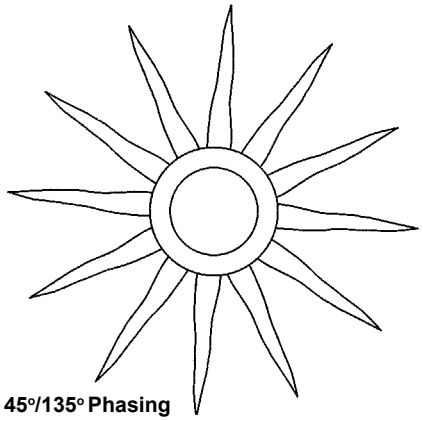

45°/135° Phasing
12 Perforation Planes

JRC Gun Weights

Length ft (m)	4 (1.22)	7 (2.13)	11 (3.35)	15 (4.57)	21 (6.4)
Loaded lb (kg)	86 (39)	154 (69)	245 (111)	335 (152)	471 (213)
Spacer lb (kg)	65 (30)	113 (51)	176 (80)	239 (109)	334 (152)

5 1/8-in. 12-spf 30°/150° Scalloped System

Item	Description	Part No.
	Shipping Assembly - 4ft	101252593
	Shipping Assembly - 7ft	101252657
	Shipping Assembly - 11ft	101252658
	Shipping Assembly - 15ft	101252659
	Shipping Assembly - 21ft	101252660
*1	Gun, Scallop - 4ft	101251986
	Gun, Scallop - 7ft	101251997
	Gun, Scallop - 11ft	101251999
	Gun, Scallop - 15ft	101252001
	Gun, Scallop - 21ft	101252002
*2	Tube, Charge Holder - 4ft	101252183
	Tube, Charge Holder - 7ft	101252185
	Tube, Charge Holder - 11ft	101252186
	Tube, Charge Holder - 15ft	101252187
	Tube, Charge Holder - 21ft	101252188
*3	Fixture Alignment	101252435
*4	Snap Ring	101252604
*5	Screw, Socket #10 - 32 x .50" L	100028191
*6	Screw, Set 0.25-20 x 0.75" L	100007783
7	Firing Head Crossover - Vann	101268070
8	Firing Head Crossover - 'Go' Systems	101268073
9	Bull Plug	101253176
10	Tandem, Grooved	101252935
11	O-Ring, #346 Buna, 90 Duro	100001971
	O-Ring, #346 Viton, 95 Duro	100064845
	Backup, O-Ring #346	101283285
12A	O-Ring, #334 Buna, 90 Duro	100001963
	O-Ring, #334 Viton, 95 Duro	100009382
	Backup, O-Ring #334	100005381
12B	O-Ring, #230 Buna, 90 Duro	100002001
*13	Kit, Booster Hardware	101251534
14	Charge - 22.7g ***MILLENNIUM***® HMX	101210674
15	Detonating Cord	See Appendix A
16	Detonator, Electric	See Det. Section
17	Alignment Insert	100005255
18	Bi-Directional Booster	See Appendix A
19	End Seal	100005251
20	Charge Clip	100005250

* Included in shipping assembly.

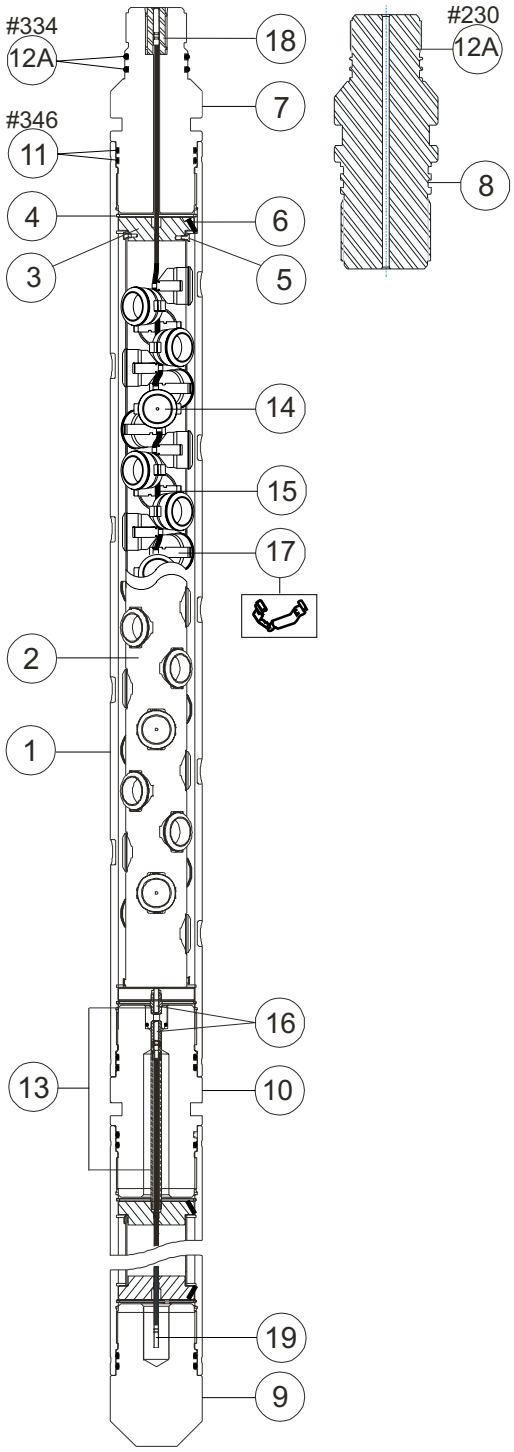

5 1/8-in. 12-spf 30°/150° Scalloped System

5 $^{1}/_{8}$-in. 12-spf 30°/150° Scalloped System

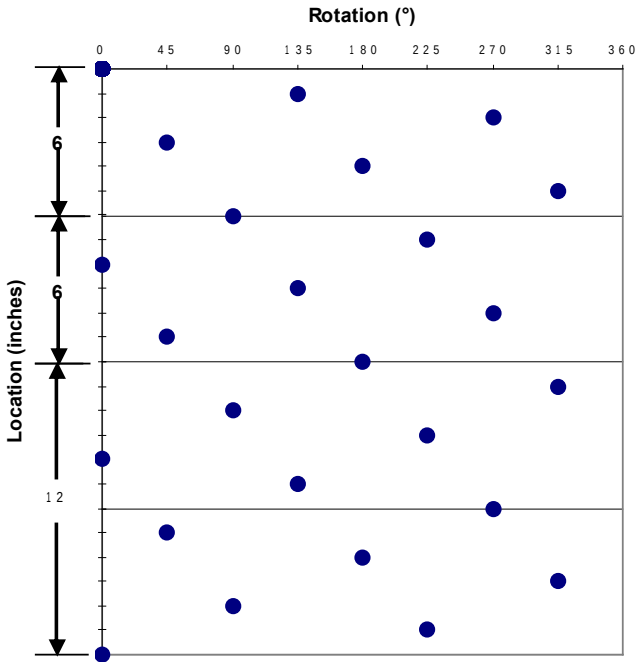

Shot Pattern for 5.125-in.
12-spf 30°/150° Phasing

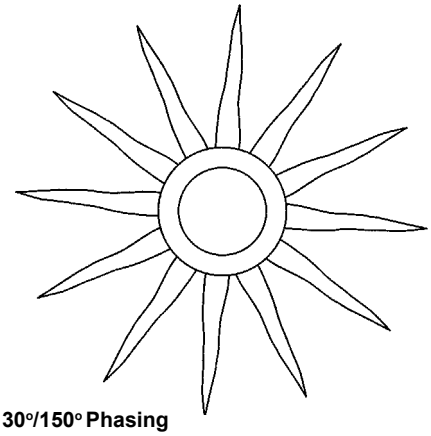

30°/150° Phasing
12 Perforation Planes

JRC Gun Weights

Length ft (m)	4 (1.22)	7 (2.13)	11 (3.35)	15 (4.57)	21 (6.4)
Loaded lb (kg)	57 (26)	102 (46)	162 (74)	222 (101)	312 (142)
Spacer lb (kg)	46 (21)	79 (36)	124 (56)	168 (76)	235 (107)

7-in. 12-spf 45°/135° BH/SH System

Item	Description	Part No.
	Shipping Assembly - 4ft	101251518
	Shipping Assembly - 7ft	101251538
	Shipping Assembly - 11ft	101251539
	Shipping Assembly - 15ft	101251541
*1	Gun, Scallop - 4ft	101251244
	Gun, Scallop - 7ft	101251299
	Gun, Scallop - 11ft	101251300
	Gun, Scallop - 15ft	101251301
*2	Tube, Charge Holder - 4ft	101246222
	Tube, Charge Holder - 7ft	101251326
	Tube, Charge Holder - 11ft	101251327
	Tube, Charge Holder - 15ft	101251328
*3	Fixture, Alignment	101251349
*4	Snap Ring	101245406
*5	Screw, Socket #10 x 0.50” L	100028191
*6	Screw, Set 0.25” D x 0.75” L	100028806
7	Firing Head Crossover - Vann	101282825
8	Firing Head Crossover - ‘Go’ Style	101251585
9	Bull Plug	101251490
10	Tandem, Grooved	101251461
11	O-Ring, #360 Buna, 90 Duro	100026720
	O-Ring, #360 Viton, 95 Duro	100064747
12A	O-Ring, #334 Buna, 90 Duro	100001963
	O-Ring, #334 Viton, 95 Duro	100009382
12B	O-Ring, #230 Buna, 90 Duro	100002001
13	Backup, O-Ring #360 (Hostile Environment)	101283289
*14	Kit, Booster Hardware	101251534
15	Charge - RDX BH/LD	101228161
	Charge - HMX BH/LD	101284384
	Charge - RDX Super Hole	101213474
	Charge - RDX Super Hole/LD	101212693
16	Detonating Cord	See Appendix A
17	Detonator, Electric	See Appendix D
18	Alignment Insert	100005255
19	Bi-Directional Booster	See Appendix A
20	End Seal	100005251
21	Charge Clip	100157866

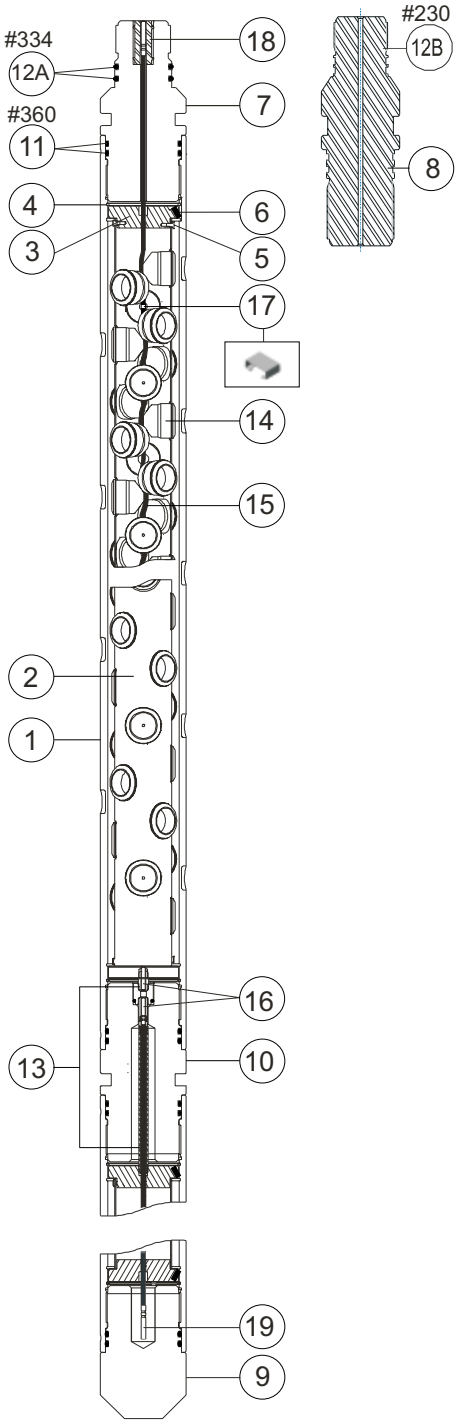

7-in. 12-spf 45°/135° BH/SH System

* Included in shipping assembly.
**Note: Charge Clip to be used on the first and last three charges.

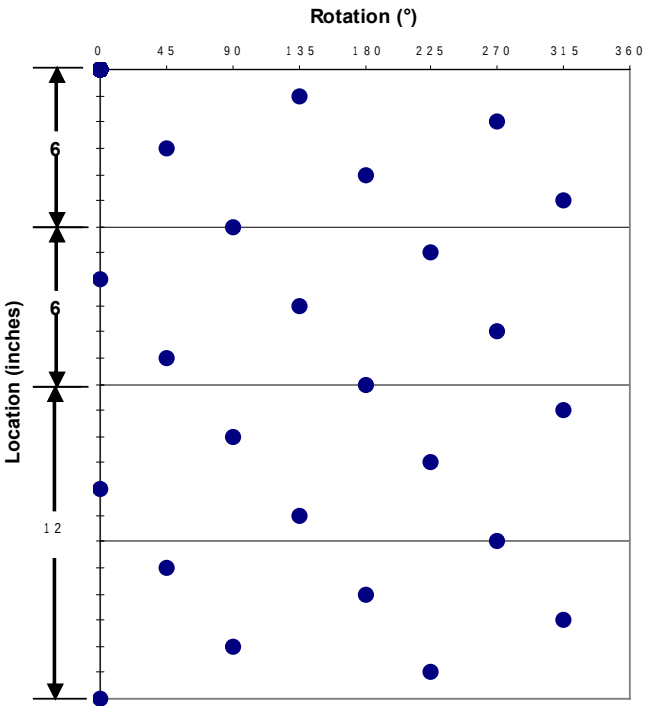

Shot Pattern for 7-in
12-spf 45°/135° Phasing

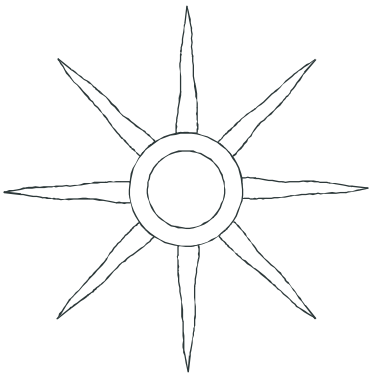

45°/135° Phasing
8 Perforation Planes

JRC Gun Weights

Length ft (m)	4 (1.22)	7 (2.13)	11 (3.35)	15 (4.57)
Loaded lb (kg)	166 (75)	295 (134)	468 (212)	641 (291)
Spacer lb (kg)	132 (61)	230 (105)	360 (164)	491 (223)

7-in. 12-spf 45°/135° *Millennium™ System*

Item	Description	Part No.
	Shipping Assembly - 4ft	101252341
	Shipping Assembly - 7ft	101252342
	Shipping Assembly - 11ft	101252343
	Shipping Assembly - 15ft	101252344
*1	Gun, Scallop - 4ft	101251244
	Gun, Scallop - 7ft	101251299
	Gun, Scallop - 11ft	101251300
	Gun, Scallop - 15ft	101251301
*2	Tube, Charge Holder - 4ft	101246222
	Tube, Charge Holder - 7ft	101251326
	Tube, Charge Holder - 11ft	101251327
	Tube, Charge Holder - 15ft	101251328
*3	Fixture, Alignment	101251349
*4	Snap Ring	101245406
*5	Screw, Socket #10 x 0.50” L	100028191
*6	Screw, Set 0.25” D x 0.75” L	100028806
7	Firing Head Crossover - Vann	101282825
8	Firing Head Crossover - ‘Go’ Style	101251585
9	Bull Plug	101251490
10	Tandem, Grooved	101251461
11	O-Ring, #360 Buna, 90 Duro	100026720
	O-Ring, #360 Viton, 95 Duro	100064747
12A	O-Ring, #334 Buna, 90 Duro	100001963
	O-Ring, #334 Viton, 95 Duro	100009382
12B	O-Ring, #230 Buna, 90 Duro	100002001
13	Backup, O-Ring #360 (Hostile Environment)	101283289
13A	Backup, O-Ring #334 (Hostile Environment)	100005381
*14	Kit, Booster Hardware	101251534
15	Charge - ***MILLENNIUM®*** HMX	101207997
16	Detonating Cord	See Appendix A
17	Detonator, Electric	See Appendix D
18	Alignment Insert	100005255
19	Bi-Directional Booster	See Appendix A
20	End Seal	100005251
21	Charge Clip	100157866

* Included in shipping assembly.
**Note: Charge Clip to be used on the first and last three charges.

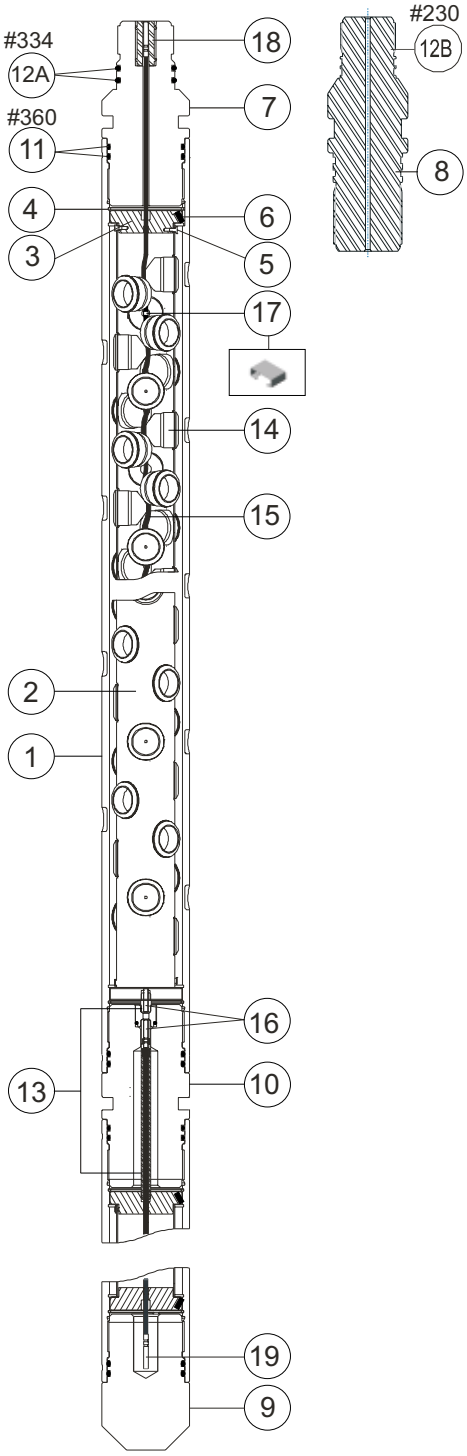

7-in. 12-spf 45°/135° Millennium™ System

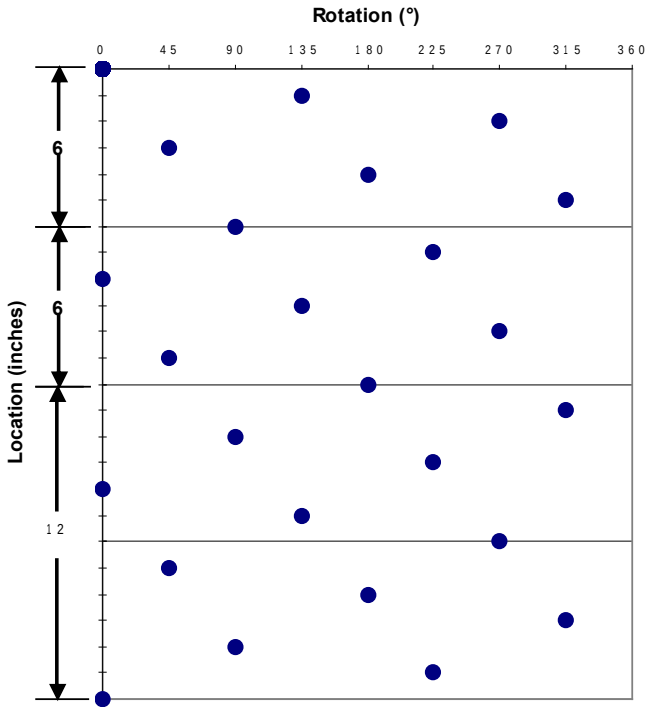

Shot Pattern for 7-in
12-spf 45°/135° Phasing

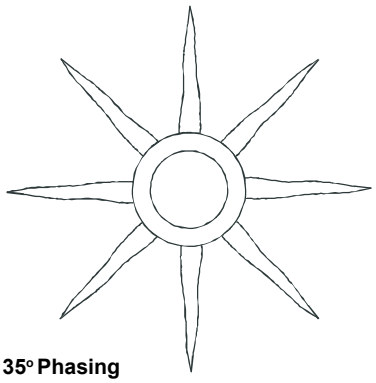

45°/135° Phasing
8 Perforation Planes

JRC Gun Weights

Length ft (m)	4 (1.22)	7 (2.13)	11 (3.35)	15 (4.57)
Loaded lb (kg)	166 (75)	295 (134)	468 (212)	641 (291)
Spacer lb (kg)	132 (61)	230 (105)	360 (164)	491 (223)

1 9/16-in. 4-spf 0° VannGun™ System

Item	Part No.	Description	Part No.
	Premium		Standard
	101235924	Shipping Assembly - 4 ft	N/A
	101235926	Shipping Assembly - 7 ft	
	101235927	Shipping Assembly - 11 ft	
	101235928	Shipping Assembly - 15 ft	
	101235929	Shipping Assembly - 21 ft	
*1	101235911	Gun, Scallop - 4 ft	N/A
	101235913	Gun, Scallop - 7 ft	
	101235914	Gun, Scallop - 11 ft	
	101235915	Gun, Scallop - 15 ft	
	101235916	Gun, Scallop - 21 ft	

Item	Description	Part No.
*2	Tube, Charge Holder - 4 ft	101235917
	Tube, Charge Holder - 7 ft	101235920
	Tube, Charge Holder - 11 ft	101235921
	Tube, Charge Holder - 15 ft	101235922
	Tube, Charge Holder - 21 ft	101235923
*3	Fixture, Alignment	101235706
*4	Screw, Set #10-32 x 0.50" L	100028832
*5	Snap Ring	101236795
*6	Screw, Socket Head #10-32 X 0.38" L	101236979
7	O-Ring, Buna 90 Duro #215	100001937
	O-Ring, Viton 95 Duro #215	100064810
	O-Ring, Aflas 90 Duro #215	101292868
	O-Ring, Backup #215	101283230
8	O-Ring, Buna 90 Duro #218	100001951
	O-Ring, Viton 95 Duro #218	100064830
	O-Ring, Aflas 90 Duro #218	101233079
	O-Ring, Backup #218	101227694
9	Insert, Alignment (Miniature PAI)	100005277
	Insert, Alignment (Miniature AAI)	100005276
10	Crossover, Firing Head	100156707
11	Tandem, Grooved	100156709
12	Crossover, Box x Pin	100156708
13	Bull Plug	120005293
14	Bi-Directional Booster	See Appendix A
15	Detonating Cord	See Appendix A
16	Charge - 3.4g HMX ***Millennium™***	100157028
17	**Teflon Grommet	100157596
18	End Seal	100005251

*Included in Shipping Assembly.
**Teflon is a trademark of E.I. Dupont De Nemours.

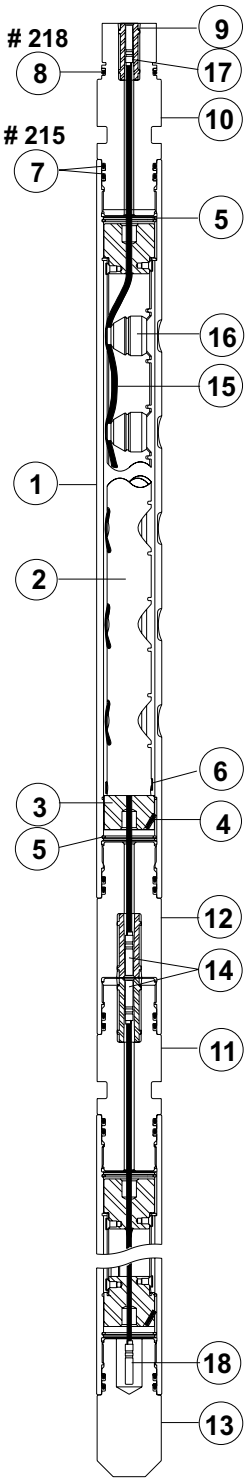

1 9/16-in. 4-spf 0° VannGun™ System

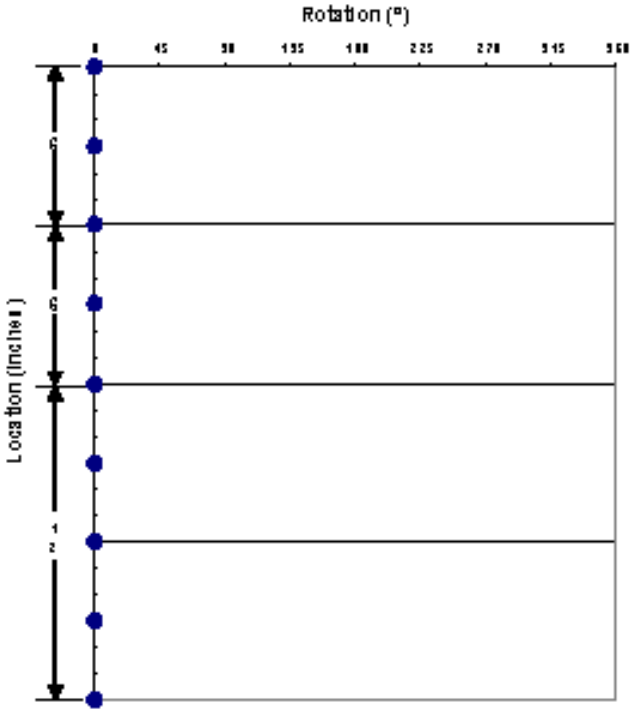

Shot Pattern for 1.5625-in.
4-spf 0° Phasing

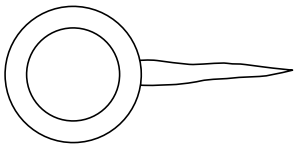

0° Phasing
1 Perforation Plane

VannGun™ Weights

Length ft (m)	4 (1.22)	7 (2.13)	11 (3.35)	15 (4.57)	21 (6.4)
Loaded lb (kg)	13 (6)	23 (10)	36 (16)	49 (22)	68 (31)
Spacer lb (kg)	10 (5)	17 (8)	27 (12)	37 (17)	52 (23)

1 9/16-in. 4-spf 60° VannGun™ System

Item.	Part No.	Description	Part No.
	Premium		Standard
	101279652	Shipping Assembly - 4 ft	N/A
	101279651	Shipping Assembly - 7 ft	
	101279650	Shipping Assembly - 11 ft	
	101279649	Shipping Assembly - 15 ft	
	101279648	Shipping Assembly - 21 ft	

*1	101279419	Gun, Scallop - 4 ft	N/A
	101279424	Gun, Scallop - 7 ft	
	101279425	Gun, Scallop - 11 ft	
	101279426	Gun, Scallop - 15 ft	
	101279428	Gun, Scallop - 21 ft	

Item	Description	Part No.
*2	Tube, Charge Holder - 4 ft	101279482
	Tube, Charge Holder - 7 ft	101279483
	Tube, Charge Holder - 11 ft	101279484
	Tube, Charge Holder - 15 ft	101279485
	Tube, Charge Holder - 21 ft	101279486
*3	Fixture, Alignment	101235706
*4	Screw, Set #10-32 x 0.50" L	100028832
*5	Snap Ring	102136795
*6	Screw, Socket Head #10-32 X 0.38" L	101236979
7	O-Ring, Buna 90 Duro #215	100001937
	O-Ring, Viton 95 Duro #215	100064810
	O-Ring, Aflas 90 Duro #215	101292868
	O-Ring, Backup #215	101283230
8	O-Ring, Buna 90 Duro #218	100001951
	O-Ring, Viton 95 Duro #218	100064830
	O-Ring, Aflas 90 Duro #218	101233079
	O-Ring, Backup #218	101227694
9	Insert, Alignment (Miniature PAI)	100005277
	Insert, Alignment (Miniature AAI)	100005276
10	Crossover, Firing Head	100156707
11	Tandem, Grooved	100156709
12	Crossover, Box x Pin	100156708
13	Bull Plug	120005293
14	Bi-Directional Booster	See Appendix A
15	Detonating Cord	See Appendix A
16	Charge - 3.4g HMX ***Millennium*™**	100157028
17	**Teflon Grommet	100157596
16	End Seal	100005251

*Included in Shipping Assembly
**Teflon is a trademark of E.I. Dupont De Nemours.

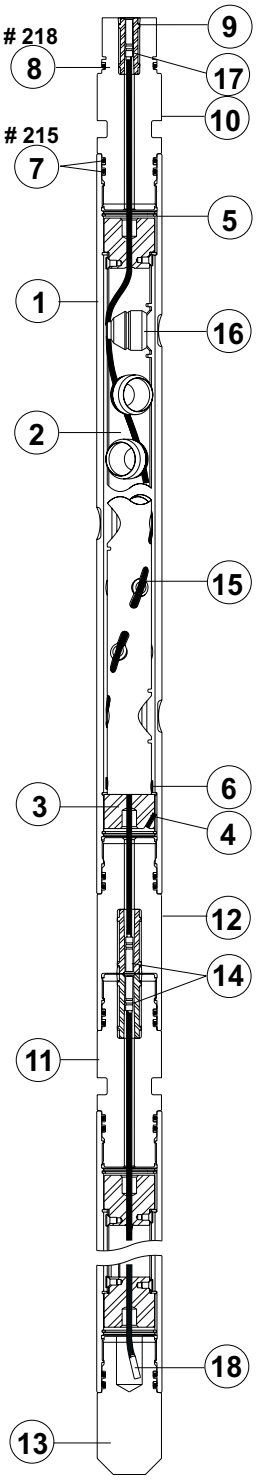

1 9/16 -in. 4-spf 60° VannGun™ System

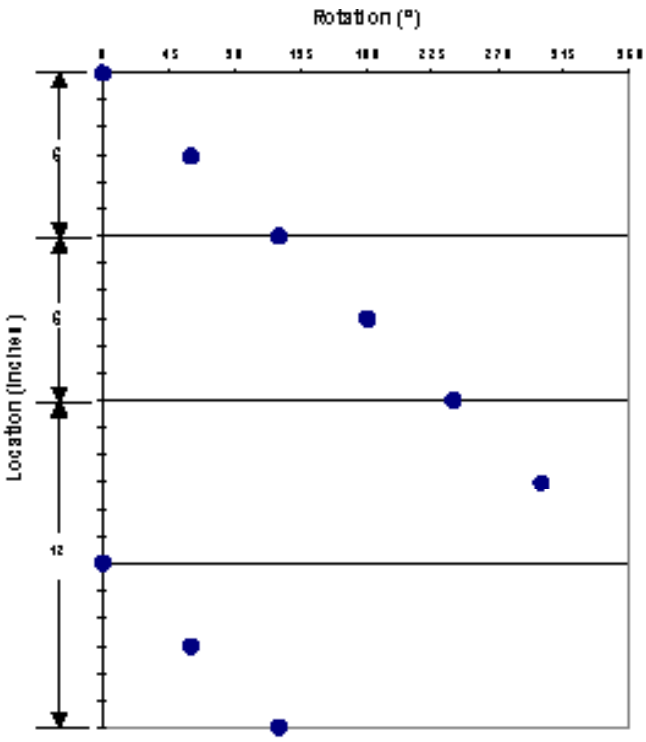

Shot Pattern for 1.5625-in. 4-spf 60° Phasing

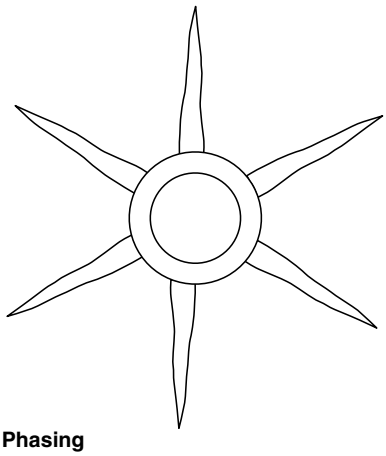

60° Phasing
6 Perforation Planes

VannGun™ Weights

Length ft (m)	4 (1.22)	7 (2.13)	11 (3.35)	15 (4.57)	21 (6.4)
Loaded lb (kg)	13 (6)	23 (10)	36 (16)	49 (22)	68 (31)
Spacer lb (kg)	10 (5)	17 (8)	27 (12)	37 (17)	52 (23)

1 9/16-in. 4-spf 90° VannGun™ System

Item	Part No.	Description	Part No.
	Premium		Standard
	101280061	Shipping Assembly - 4 ft	N/A
	101280062	Shipping Assembly - 7 ft	
	101280063	Shipping Assembly - 11 ft	
	101280060	Shipping Assembly - 15 ft	
	101280058	Shipping Assembly - 21 ft	

*1	101280921	Gun, Scallop - 4 ft	N/A
	101280922	Gun, Scallop - 7 ft	
	101280923	Gun, Scallop - 11 ft	
	102180924	Gun, Scallop - 15 ft	
	101280925	Gun, Scallop - 21 ft	

Item	Description	Part No.
*2	Tube, Charge Holder - 4 ft	101280926
	Tube, Charge Holder - 7 ft	101280927
	Tube, Charge Holder - 11 ft	101280928
	Tube, Charge Holder - 15 ft	101280929
	Tube, Charge Holder - 2 1ft	101280930
*3	Fixture, Alignment	101235706
*4	Screw, Set #10-32 x 0.50" L	100028832
*5	Snap Ring	102136795
*6	Screw, Socket Head #10-32 X 0.38" L	101236979
7	O-Ring, Buna 90 Duro #215	100001937
	O-Ring, Viton 95 Duro #215	100064810
	O-Ring, Aflas 90 Duro #215	101292868
	O-Ring, Backup #215	101283230
8	O-Ring, Buna 90 Duro #218	100001951
	O-Ring, Viton 95 Duro #218	100064830
	O-Ring, Aflas 90 Duro #218	101233079
	O-Ring, Backup #218	101227694
9	Insert, Alignment (Miniature PAI)	100005277
	Insert, Alignment (Miniature AAI)	100005276
10	Crossover, Firing Head	100156707
11	Tandem, Grooved	100156709
12	Crossover, Box x Pin	100156708
13	Bull Plug	120005293
14	Bi-Directional Booster	See Appendix A
15	Detonating Cord	See Appendix A
16	Charge - 3.4g HMX ***Millennium™***	100157028
17	**Teflon Grommet	100157596
18	End Seal	100005251

*Included in Shipping Assembly
**Teflon is a trademark of E.I. Dupont De Nemours.

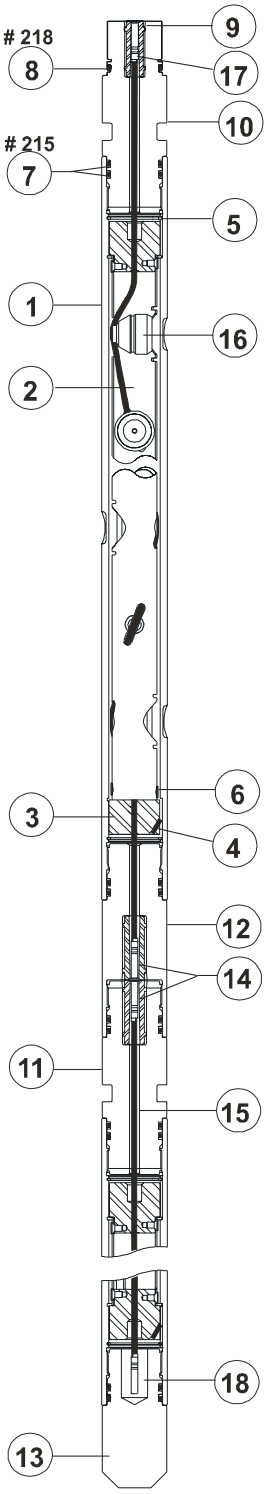

1 9/16-in. 4-spf 90° VannGun™ System

1 $^{9}/_{16}$-in. 4-spf 90° VannGun™ System

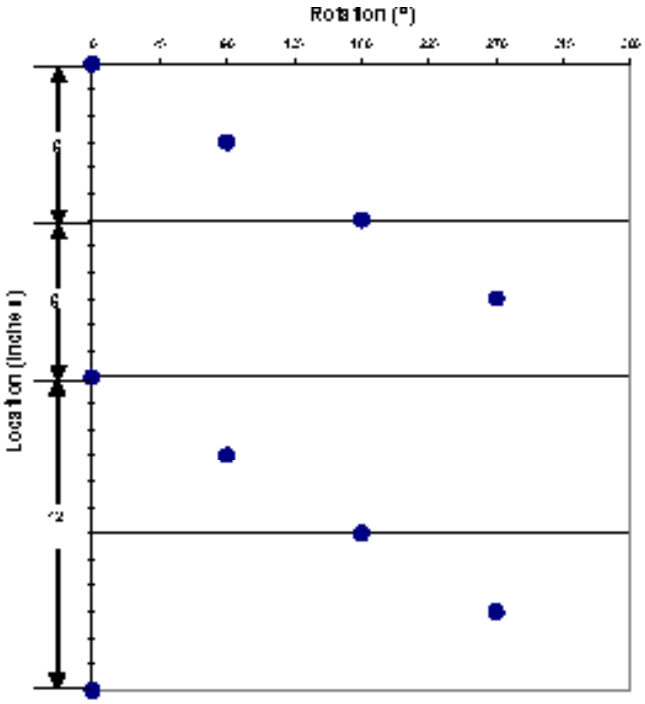

Shot Pattern for 1.5625-in. 4-spf 90° Phasing

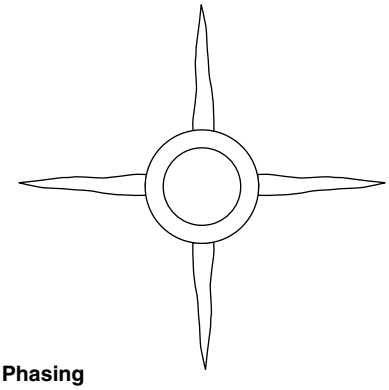

90° Phasing
4 Perforation Planes

VannGun™ Weights

Length ft (m)	4 (1.22)	7 (2.13)	11 (3.35)	15 (4.57)	21 (6.4)
Loaded lb (kg)	13 (6)	23 (10)	36 (16)	49 (22)	68 (31)
Spacer lb (kg)	10 (5)	17 (8)	27 (12)	37 (17)	52 (23)

1 9/16-in. 4-spf 180° VannGun™ System

Item	Part No.	Description	Part No.
	Premium		Standard
	101235941	Shipping Assembly - 4 ft	N/A
	101235942	Shipping Assembly - 7 ft	
	101235943	Shipping Assembly - 11 ft	
	101235944	Shipping Assembly - 15 ft	
	101235945	Shipping Assembly - 21 ft	
*1	101235931	Gun, Scallop - 4 ft	N/A
	101235932	Gun, Scallop - 7 ft	
	101235933	Gun, Scallop - 11 ft	
	101235934	Gun, Scallop - 15 ft	
	101235935	Gun, Scallop - 21 ft	

Item	Description	Part No.
*2	Tube, Charge Holder - 4 ft	101235936
	Tube, Charge Holder - 7 ft	101235937
	Tube, Charge Holder - 11 ft	101235938
	Tube, Charge Holder - 15 ft	101235939
	Tube, Charge Holder - 21 ft	101235940
*3	Fixture, Alignment	101235706
*4	Screw, Set #10-32 x 0.50" L	100028832
*5	Snap Ring	102136795
*6	Screw, Socket Head #10-32 X 0.38" L	101236979
7	O-Ring, Buna 90 Duro #215	100001937
	O-Ring, Viton 95 Duro #215	100064810
	O-Ring, Aflas 90 Duro #215	101292868
	O-Ring, Backup #215	101283230
8	O-Ring, Buna 90 Duro #218	100001951
	O-Ring, Viton 95 Duro #218	100064830
	O-Ring, Aflas 90 Duro #218	101233079
	O-Ring, Backup #218	101227694
9	Insert, Alignment (Miniature PAI)	100005277
	Insert, Alignment (Miniature AAI)	100005276
10	Crossover, Firing Head	100156707
11	Tandem, Grooved	100156709
12	Crossover, Box x Pin	100156708
13	Bull Plug	120005293
14	Bi-Directional Booster	See Appendix A
15	Detonating Cord	See Appendix A
16	Charge - 3.4g HMX ***Millennium*™**	100157028
17	**Teflon Grommet	100157596
18	End Seal	100005251

*Included in Shipping Assembly
**Teflon is a trademark of E.I. Dupont De Nemours.

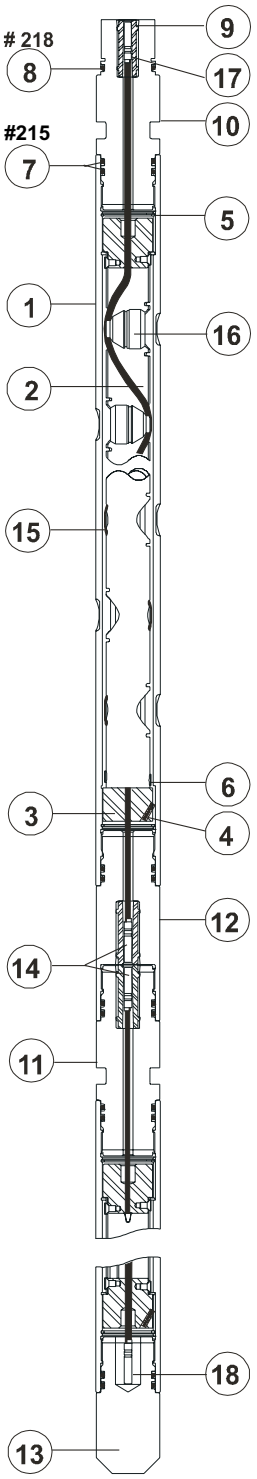

1 9/16-in. 4-spf 180° VannGun™ System

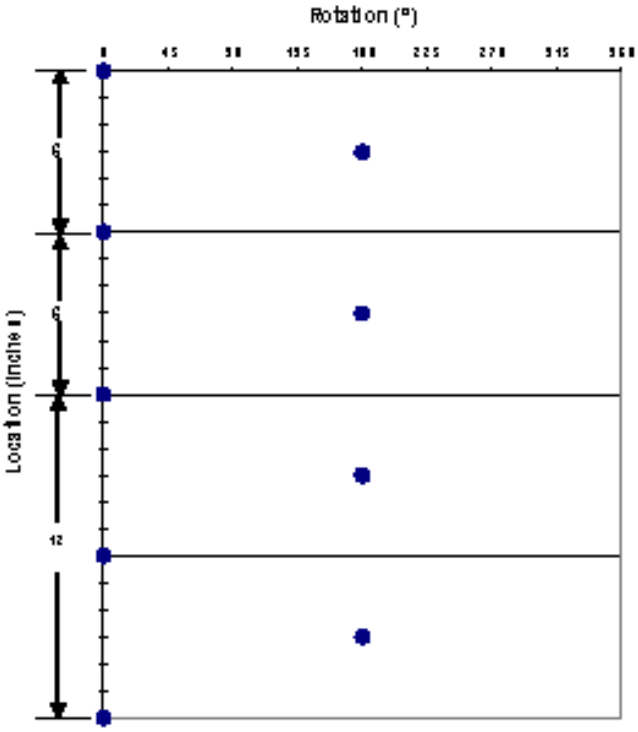

Shot Pattern for 1.5625-in. 4-spf 180° Phasing

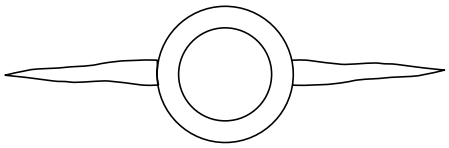

180° Phasing
2 Perforation Planes

VannGun™ Weights

Length ft (m)	4 (1.22)	7 (2.13)	11 (3.35)	15 (4.57)	21 (6.4)
Loaded lb (kg)	13 (6)	23 (10)	36 (16)	49 (22)	68 (31)
Spacer lb (kg)	10 (5)	17 (8)	27 (12)	37 (17)	52 (23)

1 9/16-in. 6-spf 60° VannGun™ System

Item	Part No.	Description	Part No.
	Premium		Standard
	101235906	Shipping Assembly - 4 ft	N/A
	101325907	Shipping Assembly - 7 ft	
	101235908	Shipping Assembly - 11 ft	
	101235909	Shipping Assembly - 15 ft	
	101235910	Shipping Assembly - 21 ft	
*1	101235895	Gun, Scallop - 4 ft	N/A
	101235896	Gun, Scallop - 7 ft	
	101235897	Gun, Scallop - 11 ft	
	101235898	Gun, Scallop - 15 ft	
	101235899	Gun, Scallop - 21 ft	

Item	Description	Part No.
*2	Tube, Charge Holder - 4 ft	101235900
	Tube, Charge Holder - 7 ft	101235901
	Tube, Charge Holder - 11 ft	101235902
	Tube, Charge Holder - 15 ft	101235903
	Tube, Charge Holder - 21 ft	101235904
*3	Fixture, Alignment	101235706
*4	Screw, Set #10-32 x 0.50" L	100028832
*5	Snap Ring	102136795
*6	Screw, Socket Head #10-32 X 0.38" L	101236979
7	O-Ring, Buna 90 Duro #215	100001937
	O-Ring, Viton 95 Duro #215	100064810
	O-Ring, Aflas 90 Duro #215	101292868
	O-Ring, Backup #215	101283230
8	O-Ring, Buna 90 Duro #218	100001951
	O-Ring, Viton 95 Duro #218	100064830
	O-Ring, Aflas 90 Duro #218	101233079
	O-Ring, Backup #218	101227694
9	Insert, Alignment (Miniature PAI)	100005277
	Insert, Alignment (Miniature AAI)	100005276
10	Crossover, Firing Head	100156707
11	Tandem, Grooved	100156709
12	Crossover, Box x Pin	100156708
13	Bull Plug	120005293
14	Bi-Directional Booster	See Appendix A
15	Detonating Cord	See Appendix A
16	Charge - 3.4g HMX ***Millennium™***	100157028
17	**Teflon Grommet	100157596
18	End Seal	100005251

*Included in Shipping Assembly
**Teflon is a trademark of E.I. Dupont De Nemours.

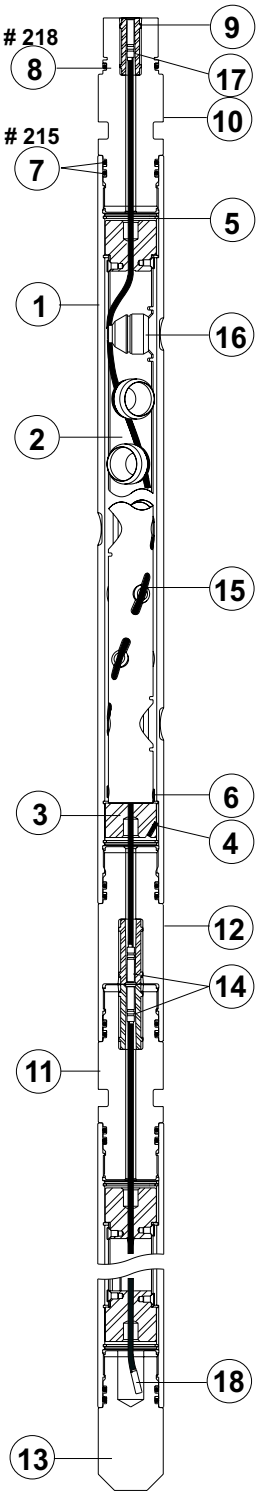

1 9/16-in. 6-spf 60° VannGun™ System

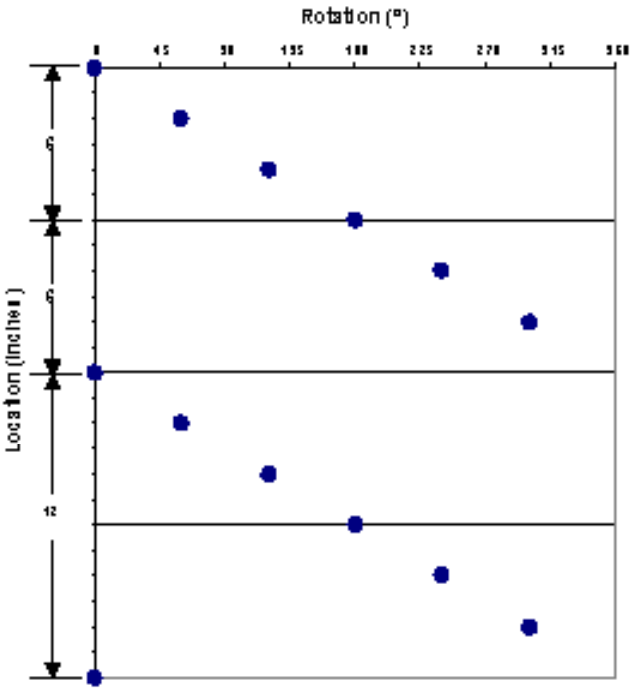

Shot Pattern for 1.5625-in. 6-spf 60° Phasing

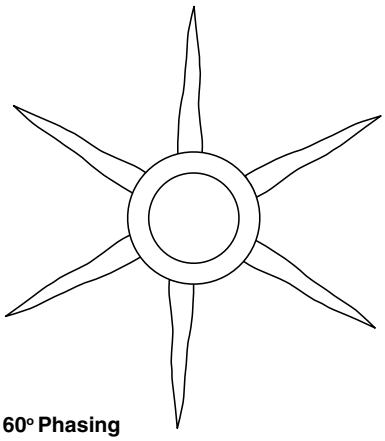

60° Phasing
6 Perforation Planes

VannGun™ Weights

Length ft (m)	4 (1.22)	7 (2.13)	11 (3.35)	15 (4.57)	21 (6.4)
Loaded lb (kg)	14 (6)	24 (11)	37 (17)	51 (23)	71 (32)
Spacer lb (kg)	10 (5)	17 (8)	27 (12)	37 (17)	52 (24)

2-in. 4-spf 0° VannGun™ System

Item	Part No.	Description	Part No.
	Premium		Standard
	101235772	Shipping Assembly - 4 ft	N/A
	101235773	Shipping Assembly - 7 ft	
	101235774	Shipping Assembly - 11 ft	
	101235775	Shipping Assembly - 15 ft	
	101235776	Shipping Assembly - 21 ft	
*1	101235752	Gun, Scallop - 4 ft	N/A
	101235753	Gun, Scallop - 7 ft	
	101235755	Gun, Scallop - 11 ft	
	101235756	Gun, Scallop - 15 ft	
	101235757	Gun, Scallop - 21 ft	

Item	Description	Part No.
*2	Tube, Charge Holder - 4 ft	101235758
	Tube, Charge Holder - 7 ft	101235760
	Tube, Charge Holder - 11 ft	101235761
	Tube, Charge Holder - 15 ft	101235763
	Tube, Charge Holder - 21 ft	101235765
*3	Fixture, Alignment	101234456
*4	Screw, Set #10-32 x 0.50" L	100028832
*5	Snap Ring	101234459
*6	Screw, Socket Head #10-32 X 0.38" L	101236979
7	O-Ring, Buna 90 Duro #221	100001953
	O-Ring, Viton 95 Duro #221	100064832
	O-Ring, Aflas 90 Duro #221	101292869
	O-Ring, Backup #221	101227517
8	O-Ring, Buna 90 Duro #218	100001951
	O-Ring, Viton 95 Duro #218	100064830
	O-Ring, Aflas 90 Duro #218	101233079
	O-Ring, Backup #218	101227694
9	Insert, Alignment (Miniature PAI)	100005277
	Insert, Alignment (Miniature AAI)	100005276
10	Crossover, Firing Head	100008010
11	Tandem, Grooved	100008008
12	Crossover, Box x Pin	100008009
13	Bull Plug	100008011
14	Bi-Directioanl Booster	See Appendix A
15	Detonating Cord	See Appendix A
16	Charge - 6.80g HMX ***Millennium***™	101208224
	Charge - 6.80g HMX SDP	100008017
	Charge - 6.80g HMX BH	101206246
	Charge - 6.90g HNS DP	100157018
17	**Teflon Grommet	100157596
18	End Seal	100005251

*Included in Shipping Assembly
**Teflon is a trademark of E.I. Dupont De Nemours.

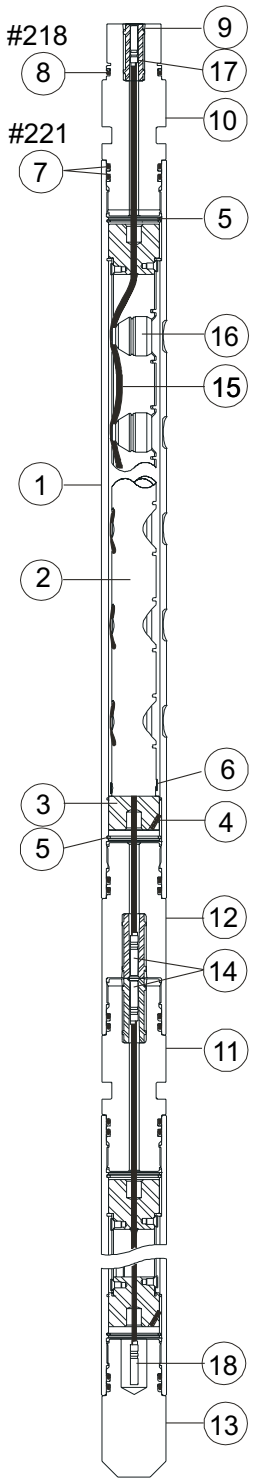

2-in. 4-spf 0° VannGun™ System

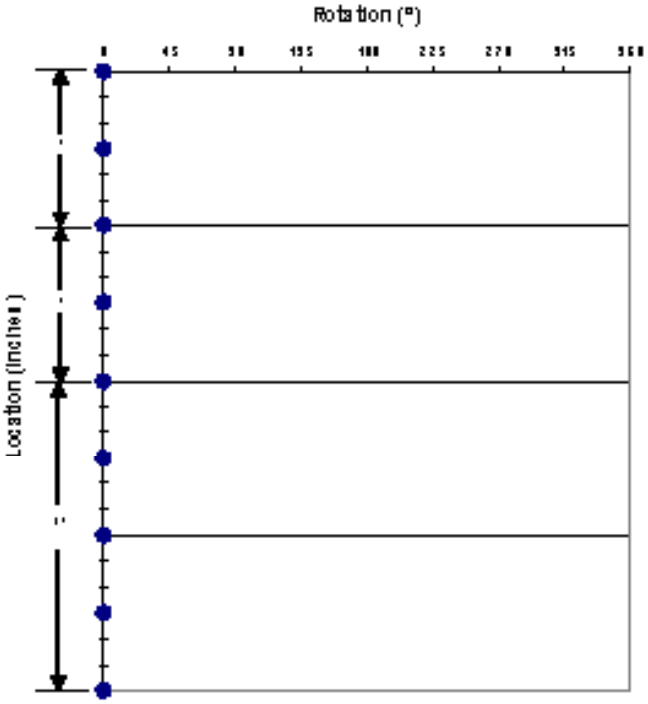

Shot Pattern for 2-in. 4-spf 0° Phasing

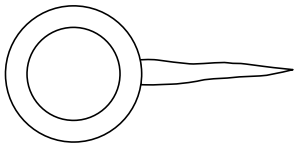

0° Phasing
1 Perforation Plane

VannGun™ Weights

Length ft (m)	4 (1.22)	7 (2.13)	11 (3.35)	15 (4.57)	21 (6.4)
Loaded lb (kg)	21 (9)	38 (17)	59 (27)	80 (36)	112 (51)
Spacer lb (kg)	16 (7)	27 (12)	44 (20)	60 (27)	84 (38)

2-in. 4-spf 60° VannGun™ System

Item	Part No.	Description	Part No.
	Premium		Standard
	101280019	Shipping Assembly - 4 ft	N/A
	101280020	Shipping Assembly - 7 ft	
	101280021	Shipping Assembly - 11 ft	
	101280022	Shipping Assembly - 15 ft	
	101280023	Shipping Assembly - 21 ft	
*1	101279726	Gun, Scallop - 4 ft	N/A
	101279725	Gun, Scallop - 7 ft	
	101279724	Gun, Scallop - 11 ft	
	101279722	Gun, Scallop - 15 ft	
	101279723	Gun, Scallop - 21 ft	

Item	Description	Part No.
*2	Tube, Charge Holder - 4 ft	101279752
	Tube, Charge Holder - 7 ft	101279754
	Tube, Charge Holder - 11 ft	101279755
	Tube, Charge Holder - 15 ft	101279756
	Tube, Charge Holder - 21 ft	101279757
*3	Fixture, Alignment	101234456
*4	Screw, Set #10-32 x 0.50” L	100028832
*5	Snap Ring	101234459
*6	Screw, Socket Head #10-32 X 0.38” L	101236979
7	O-Ring, Buna 90 Duro #221	100001953
	O-Ring, Viton 95 Duro #221	100064832
	O-Ring, Aflas 90 Duro #221	101292869
	O-Ring, Backup #221	101227517
8	O-Ring, Buna 90 Duro #218	100001951
	O-Ring, Viton 95 Duro #218	100064830
	O-Ring, Aflas 90 Duro #218	101233079
	O-Ring, Backup #218	101227694
9	Insert, Alignment (Miniature PAI)	100005277
	Insert, Alignment (Miniature AAI)	100005276
10	Crossover, Firing Head	100008010
11	Tandem, Grooved	100008008
12	Crossover, Box x Pin	100008009
13	Bull Plug	100008011
14	Bi-Directional Booster	See Appendix A
15	Detonating Cord	See Appendix A
16	Charge - 6.80 g HMX ***Millennium***™	101208224
	Charge - 6.80 g HMX SDP	100008017
	Charge - 6.80 g HMX BH	101206246
	Charge - 6.90 g HNS DP	100157018
17	**Teflon Grommet	100157596
18	End Seal	100005251

*Included in Shipping Assembly
**Teflon is a trademark of E.I. Dupont De Nemours.

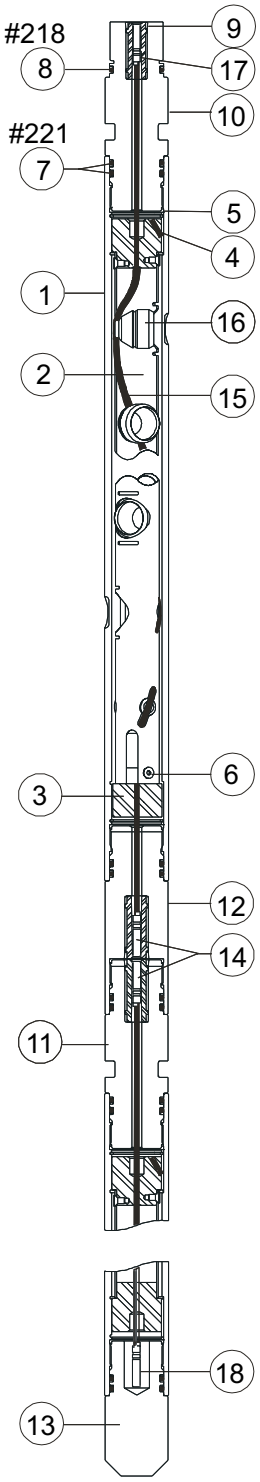

2-in. 4-spf 60° VannGun™ System

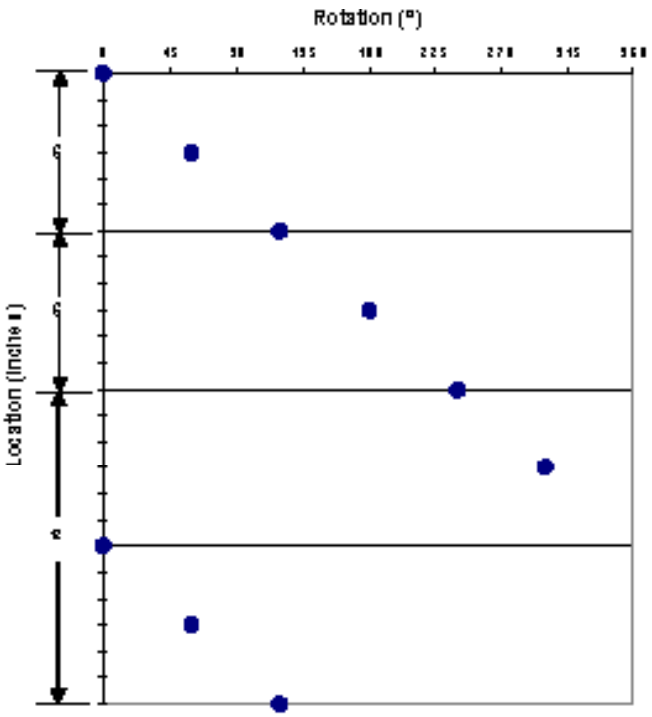

Shot Pattern for 2-in 4-spf 60° Phasing

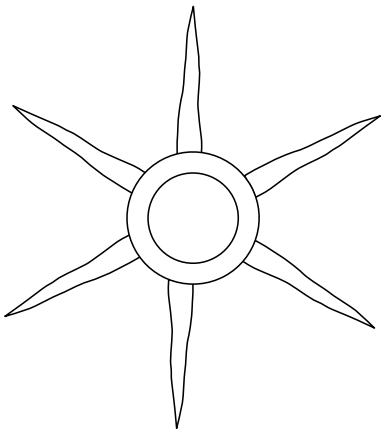

60° Phasing
6 Perforation Planes

VannGun™ Weights

Length ft (m)	4 (1.22)	7 (2.13)	11 (3.35)	15 (4.57)	21 (6.4)
Loaded lb (kg)	21 (9)	38 (17)	59 (27)	80 (36)	112 (51)
Spacer lb (kg)	16 (7)	27 (12)	44 (20)	60 (27)	84 (38)

2-in. 4-spf 90° VannGun™ System

Item	Part No.	Description	Part No.
	Premium		Standard
	101235791	Shipping Assembly - 4 ft	N/A
	101235792	Shipping Assembly - 7 ft	
	101235793	Shipping Assembly - 11 ft	
	101235795	Shipping Assembly - 15 ft	
	101235796	Shipping Assembly - 21 ft	
*1	101235780	Gun, Scallop - 4 ft	N/A
	101235781	Gun, Scallop - 7 ft	
	101235782	Gun, Scallop - 11 ft	
	101235783	Gun, Scallop - 15 ft	
	101235784	Gun, Scallop - 21 ft	

Item	Description	Part No.
*2	Tube, Charge Holder - 4 ft	101235786
	Tube, Charge Holder - 7 ft	102135787
	Tube, Charge Holder - 11 ft	101235788
	Tube, Charge Holder - 15 ft	101235789
	Tube, Charge Holder - 21 ft	101235790
*3	Fixture, Alignment	101234456
*4	Screw, Set #10-32 x 0.50” L	100028832
*5	Snap Ring	101234459
*6	Screw, Socket Head #10-32 X 0.38” L	101236979
7	O-Ring, Buna 90 Duro #221	100001953
	O-Ring, Viton 95 Duro #221	100064832
	O-Ring, Aflas 90 Duro #221	101292869
	O-Ring, Backup #221	101227517
8	O-Ring, Buna 90 Duro #218	100001951
	O-Ring, Viton 95 Duro #218	100064830
	O-Ring, Aflas 90 Duro #218	101233079
	O-Ring, Backup #218	101227694
9	Insert, Alignment (Miniature PAI)	100005277
	Insert, Alignment (Miniature AAI)	100005276
10	Crossover, Firing Head	100008010
11	Tandem, Grooved	100008008
12	Crossover, Box x Pin	100008009
13	Bull Plug	100008011
14	Bi-Directional Booster	See Appendix A
15	Detonating Cord	See Appendix A
16	Charge - 6.80 g HMX ***Millennium*™**	101208224
	Charge - 6.80 g HMX SDP	100008017
	Charge - 6.80 g HMX BH	101206246
	Charge - 6.90 g HNS DP	100157018
17	**Teflon Grommet	100157596
18	End Seal	100005251

*Included in Shipping Assembly
**Teflon is a trademark of E.I. Dupont De Nemours.

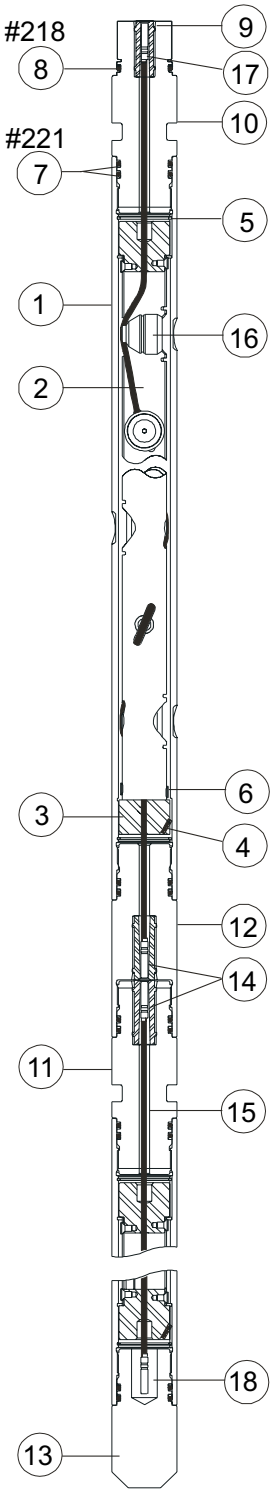

2-in. 4-spf 90° VannGun™ System

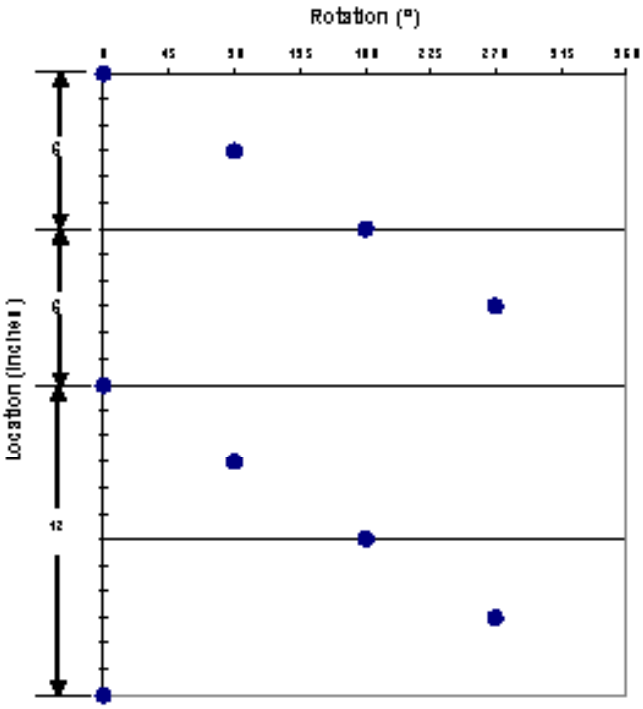

Shot Pattern for 2-in. 4-spf 90° Phasing

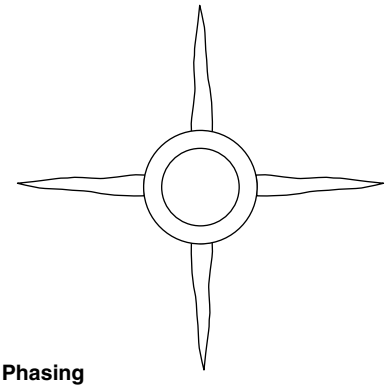

90° Phasing
4 Perforation Planes

VannGun™ Weights

Length ft (m)	4 (1.22)	7 (2.13)	11 (3.35)	15 (4.57)	21 (6.4)
Loaded lb (kg)	21 (9)	38 (17)	59 (27)	80 (36)	112 (51)
Spacer lb (kg)	16 (7)	27 (12)	44 (20)	60 (27)	84 (38)

2-in. 4-spf 180° VannGun™ System

Item	Part No.	Description	Part No.
	Premium		Standard
	101235823	Shipping Assembly - 4 ft	N/A
	101235824	Shipping Assembly - 7 ft	
	101235825	Shipping Assembly - 11 ft	
	101235826	Shipping Assembly - 15 ft	
	101235827	Shipping Assembly - 21 ft	

*1	101235829	Gun, Scallop - 4 ft	N/A
	101235802	Gun, Scallop - 7 ft	
	101235803	Gun, Scallop - 11 ft	
	101235804	Gun, Scallop - 15 ft	
	101235805	Gun, Scallop - 21 ft	

Item	Description	Part No.
*2	Tube, Charge Holder - 4 ft	101235807
	Tube, Charge Holder - 7 ft	101235808
	Tube, Charge Holder - 11 ft	101235809
	Tube, Charge Holder - 15 ft	101235810
	Tube, Charge Holder - 21 ft	101235811
*3	Fixture, Alignment	101234456
*4	Screw, Set #10-32 x 0.50" L	100028832
*5	Snap Ring	101234459
*6	Screw, Socket Head #10-32 X 0.38" L	101236979
7	O-Ring, Buna 90 Duro #221	100001953
	O-Ring, Viton 95 Duro #221	100064832
	O-Ring, Aflas 90 Duro #221	101292869
	O-Ring, Backup #221	101227517
8	O-Ring, Buna 90 Duro #218	100001951
	O-Ring, Viton 95 Duro #218	100064830
	O-Ring, Aflas 90 Duro #218	101233079
	O-Ring, Backup #218	101227694
9	Insert, Alignment (Miniature PAI)	100005277
	Insert, Alignment (Miniature AAI)	100005276
10	Crossover, Firing Head	100008010
11	Tandem, Grooved	100008008
12	Crossover, Box x Pin	100008009
13	Bull Plug	100008011
14	Bi-Directional Booster	See Appendix A
15	Detonating Cord	See Appendix A
16	Charge - 6.80 g HMX ***Millennium™***	101208224
	Charge - 6.80 g HMX SDP	100008017
	Charge - 6.80 g HMX BH	101206246
	Charge - 6.90 g HNS DP	100157018
17	**Teflon™ Grommet	100157596
18	End Seal	100005251

*Included in Shipping Assembly
**Teflon is a trademark of E.I. Dupont De Nemours.

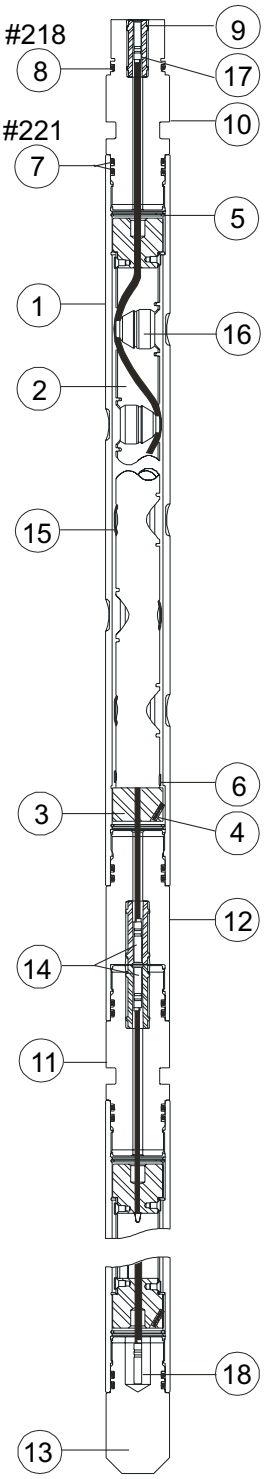

2-in. 4-spf 180° VannGun™ System

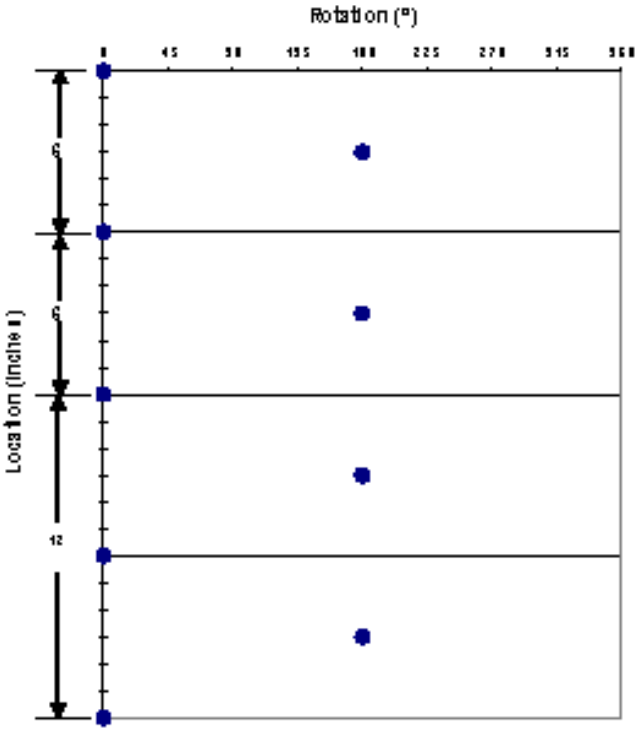

Shot Pattern for 2-in. 4-spf 180° Phasing

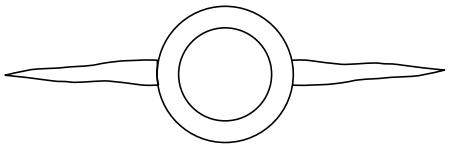

180° Phasing
4 Perforation Planes

VannGun™ Weights

Length ft (m)	4 (1.22)	7 (2.13)	11 (3.35)	15 (4.57)	21 (6.4)
Loaded lb (kg)	21 (9)	38 (17)	59 (27)	80 (36)	112 (51)
Spacer lb (kg)	16 (7)	27 (12)	44 (20)	60 (27)	84 (38)

2-in. 6-spf 60° VannGun™ System

Item	Part No.	Description	Part No.
	Premium		**Standard**
	101234455	Shipping Assembly - 4 ft	
	101234525	Shipping Assembly - 7 ft	
	101234526	Shipping Assembly - 11 ft	N/A
	101235975	Shipping Assembly - 15 ft	
*1	101234529	Shipping Assembly - 21 ft	
	101234143	Gun, Scallop - 4 ft	
	101234144	Gun, Scallop - 7 ft	
	101234145	Gun, Scallop - 11 ft	N/A
	101235715	Gun, Scallop - 15 ft	
	101234147	Gun, Scallop - 21 ft	

Item	Description	Part No.
*2	Tube, Charge Holder - 4ft	101234197
	Tube, Charge Holder - 7ft	101234201
	Tube, Charge Holder - 11ft	101234202
	Tube, Charge Holder - 15ft	101235714
	Tube, Charge Holder - 21ft	101234205
*3	Fixture, Alignment	101234456
*4	Screw, Set #10-32 x 0.50" L	100028832
*5	Snap Ring	101234459
*6	Screw, Socket Head #10-32 X 0.38" L	101236979
7	O-Ring, Buna 90 Duro #221	100001953
	O-Ring, Viton 95 Duro #221	100064832
	O-Ring, Aflas 90 Duro #221	101292869
	O-Ring, Backup #221	101227517
8	O-Ring, Buna 90 Duro #218	100001951
	O-Ring, Viton 95 Duro #218	100064830
	O-Ring, Aflas 90 Duro #218	101233079
	O-Ring, Backup #218	101227694
9	Insert, Alignment (Miniature PAI)	100005277
	Insert, Alignment (Miniature AAI)	100005276
10	Crossover, Firing Head	100008010
11	Tandem, Grooved	100008008
12	Crossover, Box x Pin	100008009
13	Bull Plug	100008011
14	Bi-Directional Booster	See Appendix A
15	Detonating Cord	See Appendix A
16	Charge - 6.8g HMX ***Millennium***	101208224
	Charge - 6.75g HMX SDP	100008017
	Charge - 6.75g HMX BH	101206246
	Charge - 6.90g HNS DP	100157018
17	Teflon™ Grommet	100157596
18	End Seal	100005251

*Included in Shipping Assembly
**Teflon is a trademark of E.I. Dupont De Nemours.

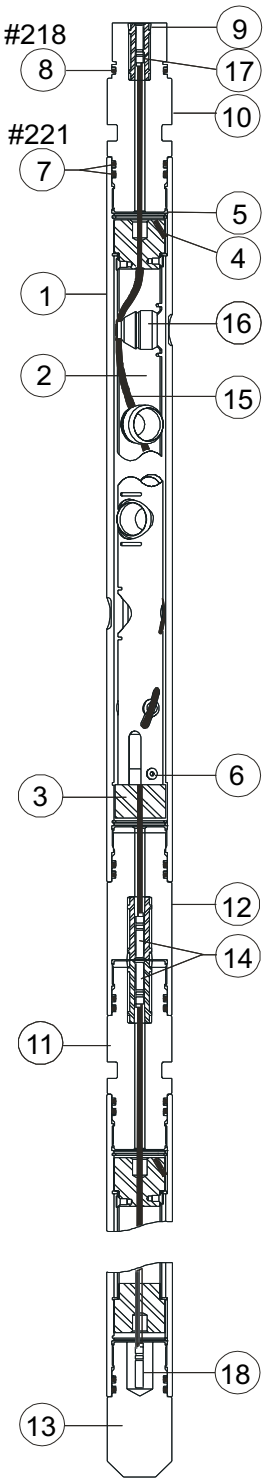

2-in. 6-spf 60° VannGun™ System

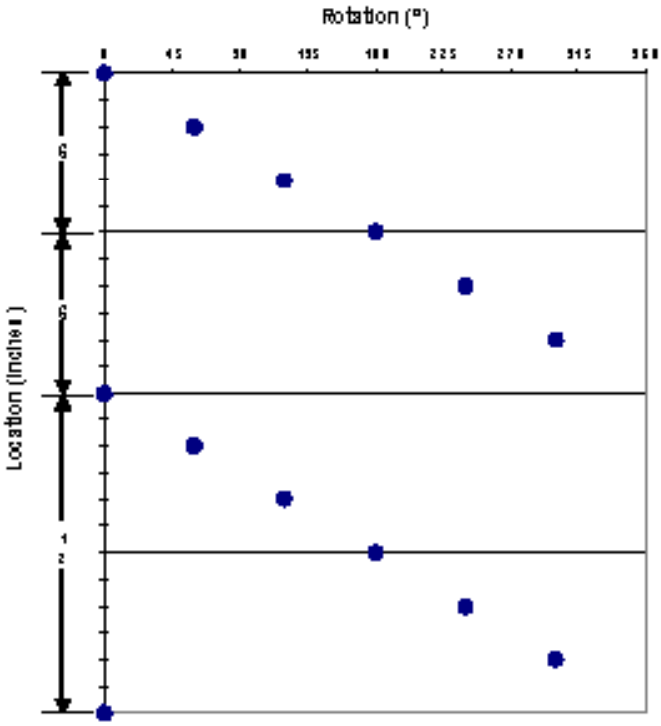

Shot Pattern for 2-in.
6-spf 60° Phasing

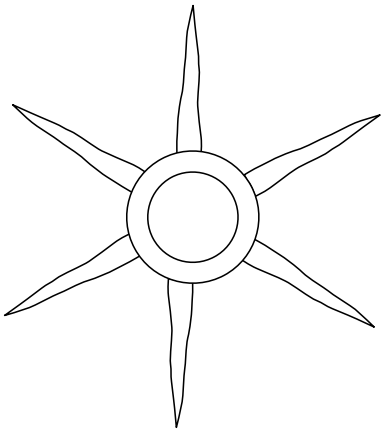

60°Phasing
6 Perforation Planes

VannGun™ Weights

Length ft (m)	4 (1.22)	7 (2.13)	11 (3.35)	15 (4.57)	21 (6.4)
Loaded lb (kg)	22 (10)	38 (17)	60 (27)	82 (37)	114 (52)
Spacer lb (kg)	15 (7)	26 (12)	42 (19)	57 (26)	79 (36)

2 1/2-in. 4-spf 0° VannGun™ System

Item	Part No.	Description	Part No.
	Premium		Standard
	101235840	Shipping Assembly - 4ft	N/A
	101235857	Shipping Assembly - 7ft	
	101235858	Shipping Assembly - 11ft	
	101235859	Shipping Assembly - 15ft	
	101235860	Shipping Assembly - 21ft	

*1	101235800	Gun, Scallop - 4ft	N/A
	101235830	Gun, Scallop - 7ft	
	101235831	Gun, Scallop - 11ft	
	101235832	Gun, Scallop - 15ft	
	101235833	Gun, Scallop - 21ft	

Item	Description	Part No.
*2	Tube, Charge Holder - 4 ft	101235834
	Tube, Charge Holder - 7 ft	101235835
	Tube, Charge Holder - 11 ft	101235836
	Tube, Charge Holder - 15 ft	101325837
	Tube, Charge Holder - 21 ft	101235838
*3	Fixture, Alignment	101236334
*4	Screw, Set #10-32 x 0.50" L	100028832
*5	Snap Ring	101236797
*6	Screw, Socket Head #10-32 X 0.38" L	101236979
7	O-Ring, Buna 90 Duro #225	100001996
	O-Ring, Viton 95 Duro #225	100003925
	O-Ring, Aflas 90 Duro #225	100005408
	O-Ring, Backup #225	101283247
8	O-Ring, Buna 90 Duro #218	100001951
	O-Ring, Viton 95 Duro #218	100064830
	O-Ring, Aflas 90 Duro #218	101233079
	O-Ring, Backup #218	101227694
9	Insert, Alignment (Miniature PAI-Top Sub)	100005277
	Insert, Alignment (Miniature AAI-Top Sub)	100005276
	Insert, Alignment (PAI)	100005255
	Insert, Alignment (AAI)	100005222
10	Crossover, Firing Head	101212977
11	Tandem, Grooved	100014292
12	Crossover, Box x Pin	100014293
13	Bull Plug	101227806
14	Bi-Directional Booster	See Appendix A
15	Detonating Cord	See Appendix A
16	Charge - 11.0g RDX DP	100014493
	Charge - 11.0 g HMX Millennium™	101206251
17	**Teflon Grommet	100157596
18	End Seal	100005251

*Included in Shipping Assembly
**Teflon is a trademark of E.I. Dupont De Nemours.

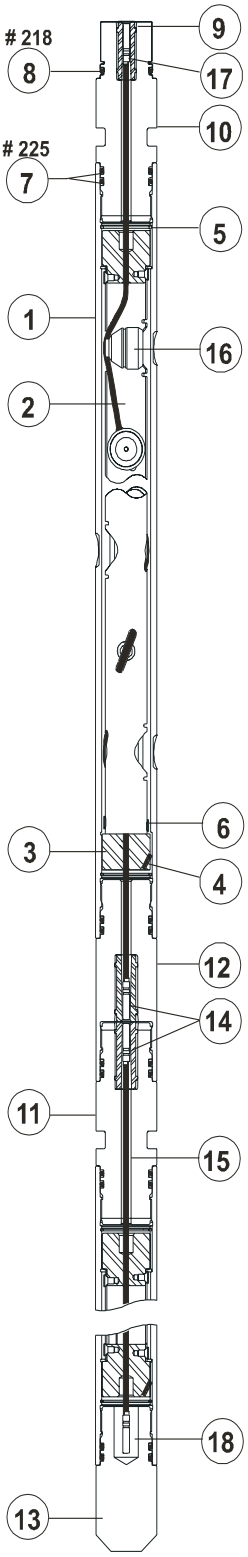

2 1/2-in. 4-spf 0° VannGun™ System

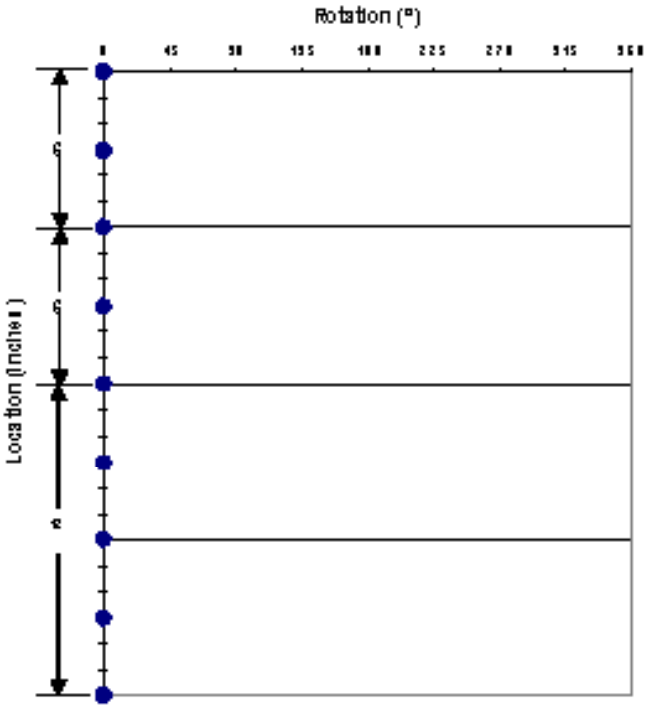

4-spf 0° Phasing

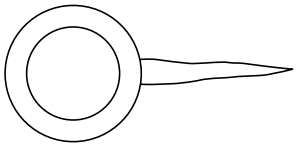

0° Phasing
1 Perforation Plane

VannGun™ Weights

Length ft (m)	4 (1.22)	7 (2.13)	11 (3.35)	15 (4.57)	21 (6.4)
Loaded lb (kg)	32 (15)	55 (25)	87 (40)	118 (54)	165 (75)
Spacer lb (kg)	23 (11)	41 (18)	64 (29)	87 (40)	122 (55)

2 1/2-in. 4-spf 60° VannGun™ System

Item	Part No.	Description	Part No.
	Premium		Standard
	101280052	Shipping Assembly - 4ft	N/A
	101280053	Shipping Assembly - 7ft	
	101280054	Shipping Assembly - 11ft	
	101280055	Shipping Assembly - 15ft	
	101280056	Shipping Assembly - 21ft	
*1	101280043	Gun, Scallop - 4ft	N/A
	101280044	Gun, Scallop - 7ft	
	101280045	Gun, Scallop - 11ft	
	101280046	Gun, Scallop - 15ft	
	101280042	Gun, Scallop - 21ft	

Item	Description	Part No.
*2	Tube, Charge Holder - 4 ft	101280778
	Tube, Charge Holder - 7 ft	101280780
	Tube, Charge Holder - 11 ft	101280781
	Tube, Charge Holder - 15 ft	101280782
	Tube, Charge Holder - 21 ft	101280783
*3	Fixture, Alignment	101236334
*4	Screw, Set #10-32 x 0.50" L	100028832
*5	Snap Ring	101236797
*6	Screw, Socket Head #10-32 X 0.38" L	101236979
7	O-Ring, Buna 90 Duro #225	100001996
	O-Ring, Viton 95 Duro #225	100003925
	O-Ring, Aflas 90 Duro #225	100005408
	O-Ring, Backup #225	101283247
8	O-Ring, Buna 90 Duro #218	100001951
	O-Ring, Viton 95 Duro #218	100064830
	O-Ring, Aflas 90 Duro #218	101233079
	O-Ring, Backup #218	101227694
9	Insert, Alignment (Miniature PAI-Top Sub)	100005277
	Insert, Alignment (Miniature AAI-Top Sub)	100005276
	Insert, Alignment (PAI)	100005255
	Insert, Alignment (AAI)	100005222
10	Crossover, Firing Head	101212977
11	Tandem, Grooved	100014292
12	Crossover, Box x Pin	100014293
13	Bull Plug	101227806
14	Bi-Directional Booster	See Appendix A
15	Detonating Cord	See Appendix A
16	Charge - 11.0 g RDX DP	100014493
	Charge - 11.0 g HMX Millennium™	101206251
17	**Teflon Grommet	100157596
18	End Seal	100005251

*Included in Shipping Assembly
**Teflon is a trademark of E.I. Dupont De Nemours.

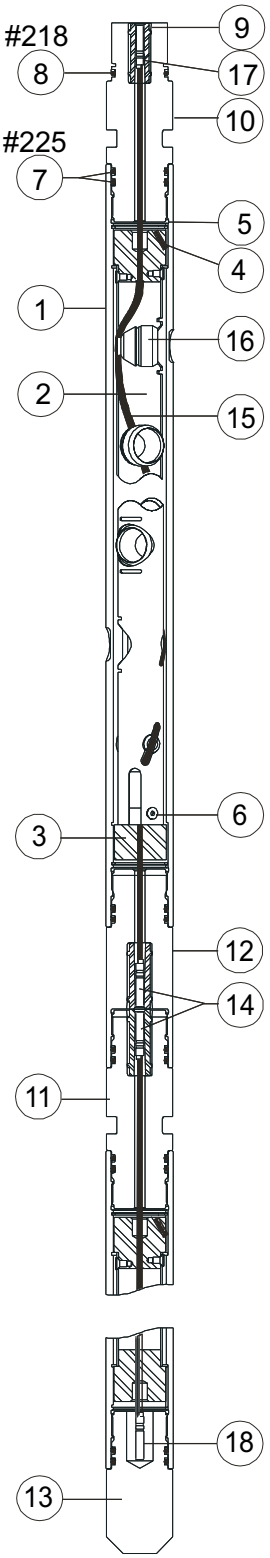

2 1/2-in. 4-spf 60° VannGun™ System

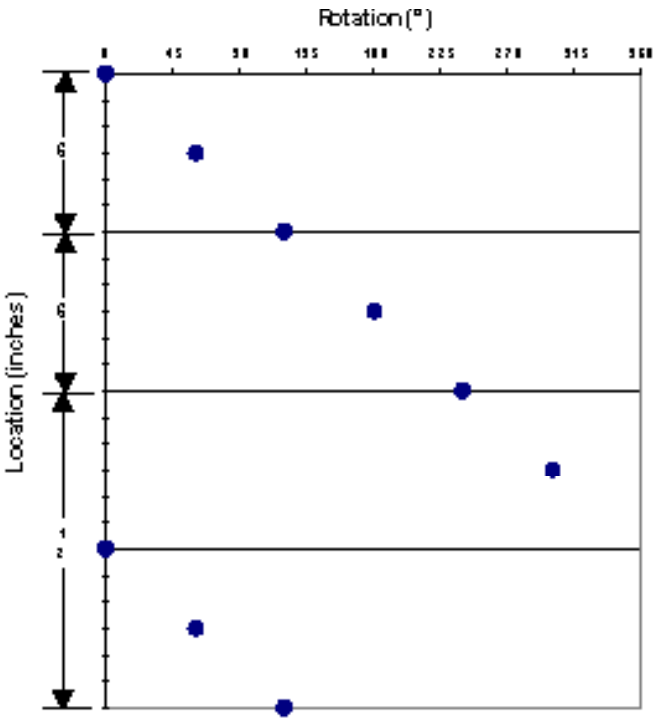

4-spf 60° Phasing

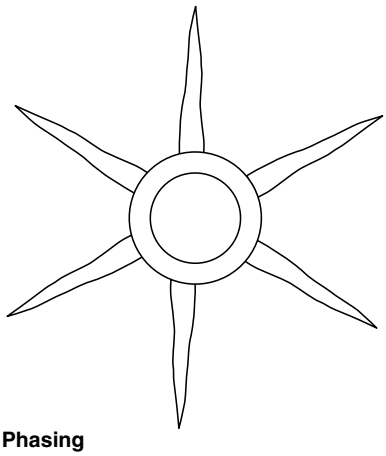

60° Phasing
6 Perforation Planes

VannGun™ Weights

Length ft (m)	4 (1.22)	7 (2.13)	11 (3.35)	15 (4.57)	21 (6.4)
Loaded lb (kg)	32 (15)	55 (25)	87 (40)	118 (54)	165 (75)
Spacer lb (kg)	23 (11)	41 (18)	64 (29)	87 (40)	122 (55)

2 1/2-in. 4-spf 90° VannGun™ System

Item	Part No.	Description	Part No.
	Premium		Standard
	101280065	Shipping Assembly - 4ft	N/A
	101280066	Shipping Assembly - 7ft	
	101280067	Shipping Assembly - 11ft	
	101280068	Shipping Assembly - 15ft	
	101280069	Shipping Assembly - 21ft	
*1	101281455	Gun, Scallop - 4ft	N/A
	101281456	Gun, Scallop - 7ft	
	101281457	Gun, Scallop - 11ft	
	101251458	Gun, Scallop - 15ft	
	101281459	Gun, Scallop - 21ft	

Item	Description	Part No.
*2	Tube, Charge Holder - 4 ft	101281502
	Tube, Charge Holder - 7 ft	101281503
	Tube, Charge Holder - 11 ft	101281504
	Tube, Charge Holder - 15 ft	101281505
	Tube, Charge Holder - 21 ft	101281506
*3	Fixture, Alignment	101236334
*4	Screw, Set #10-32 x 0.50" L	100028832
*5	Snap Ring	101236797
*6	Screw, Socket Head #10-32 X 0.38" L	101236979
7	O-Ring, Buna 90 Duro #225	100001996
	O-Ring, Viton 95 Duro #225	100003925
	O-Ring, Aflas 90 Duro #225	100005408
	O-Ring, Backup #225	101283247
8	O-Ring, Buna 90 Duro #218	100001951
	O-Ring, Viton 95 Duro #218	100064830
	O-Ring, Aflas 90 Duro #218	101233079
	O-Ring, Backup #218	101227694
9	Insert, Alignment (Miniature PAI-Top Sub)	100005277
	Insert, Alignment (Miniature AAI-Top Sub)	100005276
	Insert, Alignment (PAI)	100005255
	Insert, Alignment (AAI)	100005222
10	Crossover, Firing Head	101212977
11	Tandem, Grooved	100014292
12	Crossover, Box x Pin	100014293
13	Bull Plug	101227806
14	Bi-Directional Booster	See Appendix A
15	Detonating Cord	See Appendix A
16	Charge - 11.0g RDX DP	100014493
	Charge - 11.0g HMX Millennium™	101206251
17	**Teflon Grommet	100157596
18	End Seal	100005251

*Included in Shipping Assembly
**Teflon is a trademark of E.I. Dupont De Nemours.

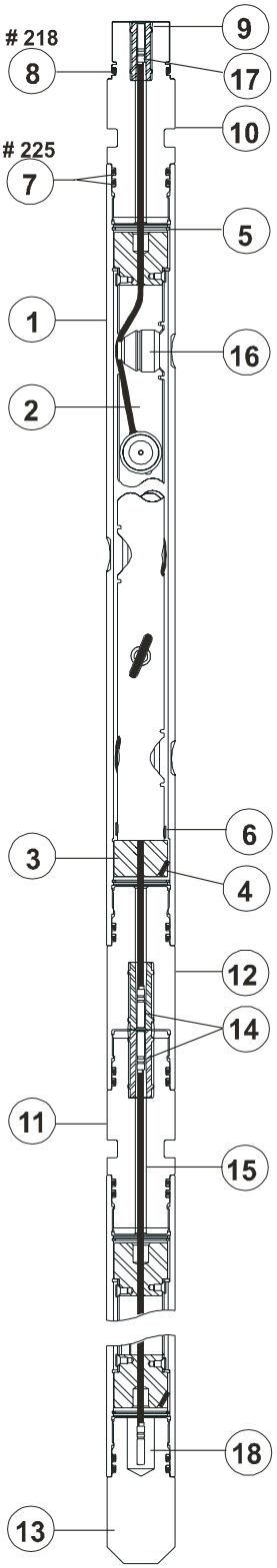

2 1/2-in. 6-spf 60° VannGun™ System

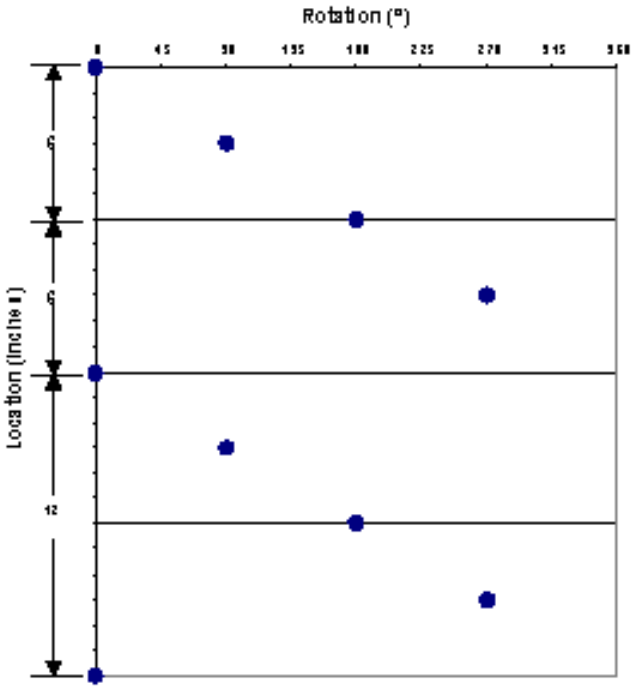

Shot Pattern for 2.5-in.
4-spf 90° Phasing

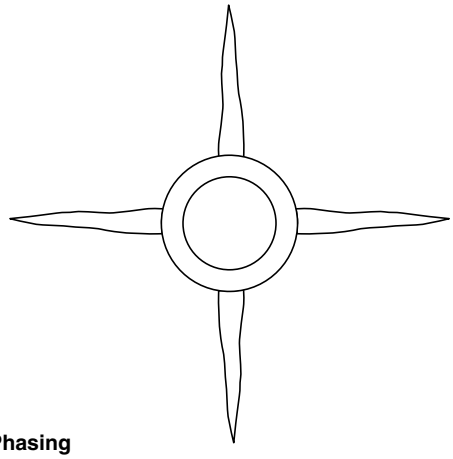

90° Phasing
4 Perforation Planes

Vanngun™ Weights

Length ft (m)	4 (1.22)	7 (2.13)	11 (3.35)	15 (4.57)	21 (6.4)
Loaded lb (kg)	32 (15)	55 (25)	87 (40)	118 (54)	165 (75)
Spacer lb (kg)	23 (11)	41 (18)	64 (29)	87 (40)	122 (55)

2 1/2 in. 4-spf 180° VannGun™ System

Item	Part No.	Description	Part No.
	Premium		Standard
	101235878	Shipping Assembly - 4ft	N/A
	101235880	Shipping Assembly - 7ft	
	101235881	Shipping Assembly - 11ft	
	101235883	Shipping Assembly - 15ft	
	101235884	Shipping Assembly - 21ft	
*1	101235863	Gun, Scallop - 4ft	N/A
	101235865	Gun, Scallop - 7ft	
	101235866	Gun, Scallop - 11ft	
	101235867	Gun, Scallop - 15ft	
	101235868	Gun, Scallop - 21ft	

Item	Description	Part No.
*2	Tube, Charge Holder - 4 ft	101235870
	Tube, Charge Holder - 7 ft	101235872
	Tube, Charge Holder - 11 ft	101235873
	Tube, Charge Holder - 15 ft	101235875
	Tube, Charge Holder - 21 ft	101235877
*3	Fixture, Alignment	101236334
*4	Screw, Set #10-32 x 0.50" L	100028832
*5	Snap Ring	101236797
*6	Screw, Socket Head #10-32 X 0.38" L	101236979
7	O-Ring, Buna 90 Duro #225	100001996
	O-Ring, Viton 95 Duro #225	100003925
	O-Ring, Aflas 90 Duro #225	100005408
	O-Ring, Backup #225	101283247
8	O-Ring, Buna 90 Duro #218	100001951
	O-Ring, Viton 95 Duro #218	100064830
	O-Ring, Aflas 90 Duro #218	101233079
	O-Ring, Backup #218	101227694
9	Insert, Alignment (Miniature PAI-Top Sub)	100005277
	Insert, Alignment (Miniature AAI-Top Sub)	100005276
	Insert, Alignment (PAI)	100005255
	Insert, Alignment (AAI)	100005222
10	Crossover, Firing Head	101212977
11	Tandem, Grooved	100014292
12	Crossover, Box x Pin	100014293
13	Bull Plug	101227806
14	Bi-Directional Booster	See Appendix A
15	Detonating Cord	See Appendix A
16	Charge - 11.0 g RDX DP	100014493
	Charge - 11.0 g HMX Millennium™	101206251
17	**Teflon Grommet	100157596
18	End Seal	100005251

*Included in Shipping Assembly
**Teflon is a trademark of E.I. Dupont De Nemours.

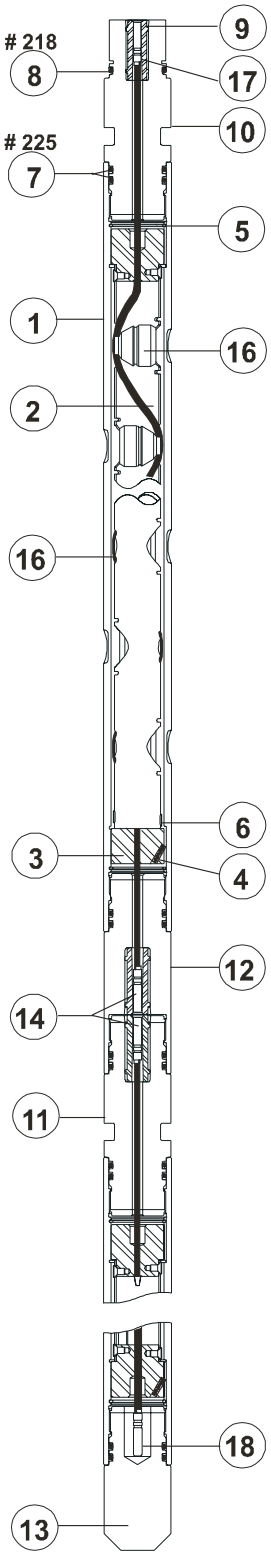

2 1/2 in. 4-spf 180° VannGun™ System

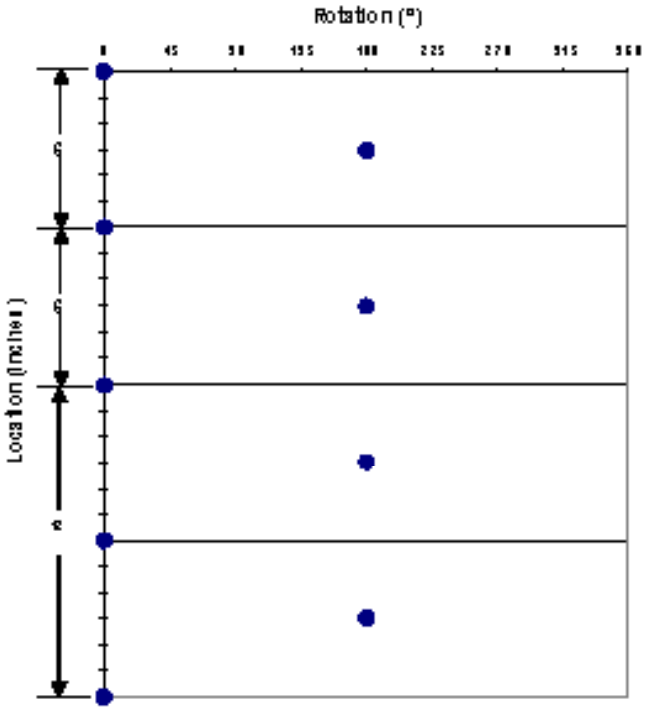

Shot Pattern for 2.5-in
4-spf 180° Phasing

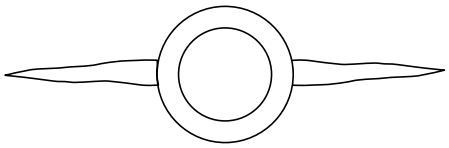

180° Phasing
2 Perforation Planes

VannGun™ Weights

Length ft (m)	4 (1.22)	7 (2.13)	11 (3.35)	15 (4.57)	21 (6.4)
Loaded lb (kg)	32 (15)	55 (25)	87 (40)	118 (54)	165 (75)
Spacer lb (kg)	23 (11)	41 (18)	64 (29)	87 (40)	122 (55)

2 1/2 in. 6-spf 60° VannGun™ System

Item	Part No.	Description	Part No.
	Premium		Standard
	101235740	Shipping Assembly - 4ft	N/A
	101235743	Shipping Assembly - 7ft	
	101235744	Shipping Assembly - 11ft	
	101235745	Shipping Assembly - 15ft	
	101235747	Shipping Assembly - 21ft	

*1	101235728	Gun, Scallop - 4ft	N/A
	101235729	Gun, Scallop - 7ft	
	101235730	Gun, Scallop - 11ft	
	101235731	Gun, Scallop - 15ft	
	101235732	Gun, Scallop - 21ft	

Item	Description	Part No.
*2	Tube, Charge Holder - 4ft	101235733
	Tube, Charge Holder - 7ft	101235734
	Tube, Charge Holder - 11ft	101235736
	Tube, Charge Holder - 15ft	101235738
	Tube, Charge Holder - 21ft	101235739
*3	Fixture, Alignment	101236334
*4	Screw, Set #10-32 x 0.50" L	100028832
*5	Snap Ring	101236797
*6	Screw, Socket Head #10-32 X 0.38" L	101236979
7	O-Ring, Buna 90 Duro #225	100001996
	O-Ring, Viton 95 Duro #225	100003925
	O-Ring, Aflas 90 Duro #225	100005408
	O-Ring, Backup #225	101283247
8	O-Ring, Buna 90 Duro #218	100001951
	O-Ring, Viton 95 Duro #218	100064830
	O-Ring, Aflas 90 Duro #218	101233079
	O-Ring, Backup #218	101227694
9	Insert, Alignment (Miniature PAI-Top Sub)	100005277
	Instert, Alignment (Miniature AAI-Top Sub)	100005276
	Insert, Alignment (PAI)	100005255
	Instert, Alignment (AAI)	100005222
10	Crossover, Firing Head	101212977
11	Tandem, Grooved	100014292
12	Crossover, Box x Pin	100014293
13	Bull Plug	101227806
14	Bi-Directional Booster	See Appendix A
15	Detonating Cord	See Appendix A
16	Charge - 11.0g RDX DP	100014493
	Charge - 11.0g HMX *Millennium*®	101206251
17	Teflon Grommet	100157596
18	End Seal	100005251

*Included in Shipping Assembly
**Teflon is a trademark of E.I. Dupont De Nemours.

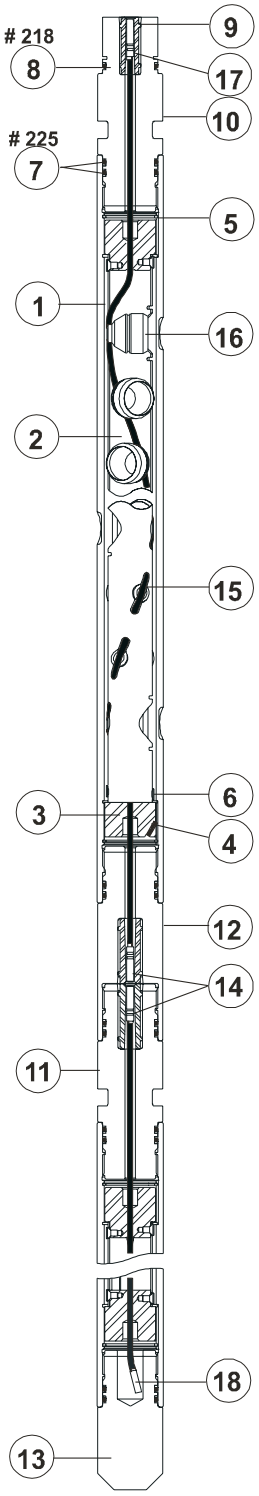

2 1/2 in. 6-spf 60° VannGun™ System

2 $^1/_2$ in. 6-spf 60° VannGun™ System

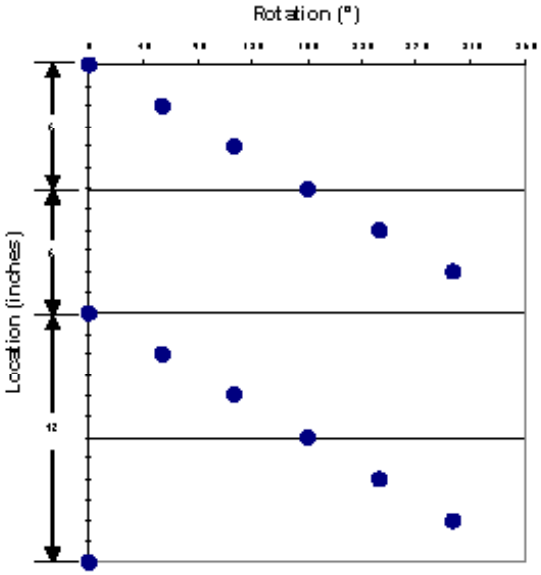

Shot Pattern for 2.5-in.
5-spf 60° Phasing

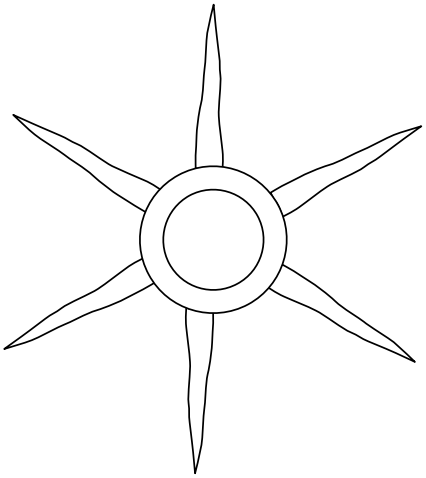

60° Phasing
6 Perforation Planes

VannGun™ Weights

Length ft (m)	4 (1.22)	7 (2.13)	11 (3.35)	15 (4.57)	21 (6.4)
Loaded lb (kg)	34 (15)	59 (27)	93 (42)	122 (55)	178 (81)
Spacer lb (kg)	23 (11)	41 (18)	64 (29)	87 (40)	122 (55)

2 3/4 in. 4-spf 180° VannGun™ System

Item	Part No.	Description	Part No.
	Premium		Standard
	101217010	Shipping Assembly - 4 ft	N/A
	101217011	Shipping Assembly - 8 ft	
	101217012	Shipping Assembly - 11 ft	
	101217013	Shipping Assembly - 16 ft	
	101217014	Shipping Assembly - 22 ft	
*1	101217000	Gun, Scallop - 4 ft	N/A
	101217001	Gun, Scallop - 8 ft	
	101217002	Gun, Scallop - 11 ft	
	101217003	Gun, Scallop - 16 ft	
	101217004	Gun, Scallop - 22 ft	

Item	Description	Part No.
*2	Tube, Charge Holder - 4ft	101217005
	Tube, Charge Holder - 8ft	101217006
	Tube, Charge Holder - 11ft	101217007
	Tube, Charge Holder - 16ft	101217008
	Tube, Charge Holder - 22ft	101217009
*3	Fixture, Alignment	100158122
*4	Screw, Set 0.25”-20 D x 0.63” L	100007783
*5	Snap Ring	N/A
*6	Screw, Hex Socket 0.25”-20 D x 0.50” L	100028225
7	O-Ring, Buna 90 Duro #329	100001957
	O-Ring, Viton 95 Duro #329	100009538
	O-Ring, Aflas 90 Duro #329	100157504
	O-Ring, Backup #329	100005401
8	O-Ring, Buna 90 Duro #329	100001957
	O-Ring, Viton 95 Duro #329	100009538
	O-Ring, Aflas 90 Duro #329	100157504
	O-Ring, Backup #329	100005401
9	Insert, Alignment (PAI)	100005255
	Insert, Alignment (AAI)	100005222
10	Tandem, Grooved	100005261
11	Tandem, Grooved	100005261
12	Crossover, Box x Pin	100005262
13	Bull Plug	100005267
14	Bi-Directional Booster	See Appendix A
15	Detonating Cord	See Appendix A
16	Charge - 12.5g RDX DP	100005328
	Charge - 13.0g RDX DP/LD	100158220
	Charge - 12.5g HMX DP	100005329
	Charge - 13.0g HMX DP/LD	100157013
	Charge - 12.5g PYX/BRX DP	100005330
17	Charge Clip	100005477
18	End Seal	100005251
19	Charge Tube Centralizer	100158123

*Included in shipping assembly.

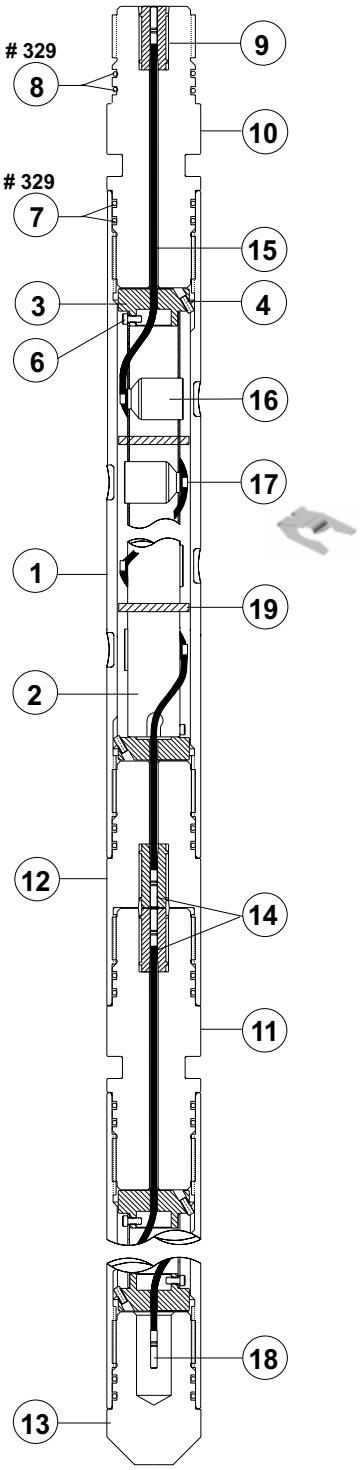

2 3/4 in. 4-spf 180° VannGun™ System

2 $^{3}/_{4}$-in. 4-spf 180° VannGun™ System

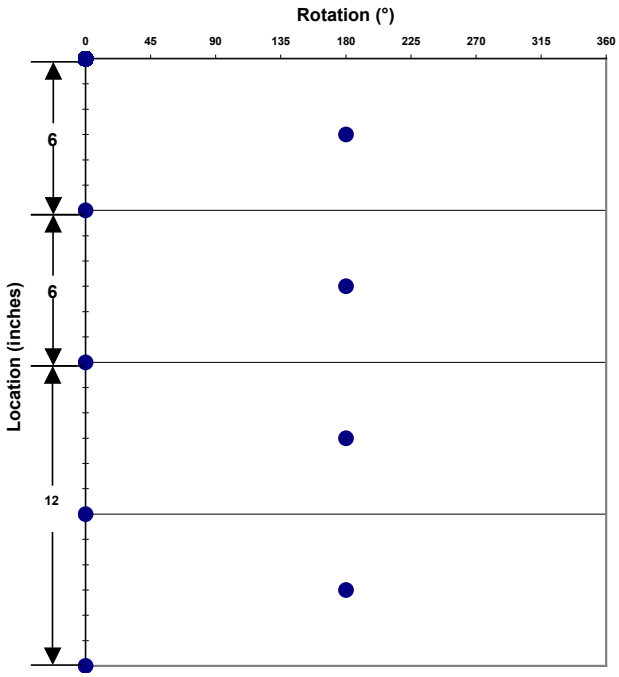

Shot Pattern for 2.75-in.
4-spf 180° Phasing

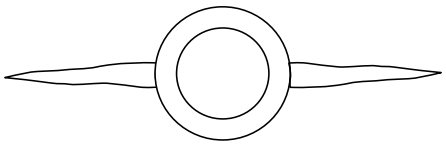

180° Phasing
2 Perforation Planes

VannGun™ Weights

Length ft (m)	4ft (1.22)	8 ft (2.13)	11 ft (3.35)	16 ft (4.57)	22 ft (6.4)
Loaded lb (kg)	38 (17)	77 (35)	106 (48)	155 (70)	213 (97)
Spacer lb (kg)	31 (14)	62 (28)	85 (39)	124 (56)	171 (77)

2 3/4 in. 5-spf 180° VannGun™ System

Item	Part No.	Description	Part No.
	Premium		Standard
	101216978	Shipping Assembly - 4 ft	N/A
	101216980	Shipping Assembly - 8 ft	
	101216981	Shipping Assembly - 11 ft	
	101216982	Shipping Assembly - 16 ft	
	101216984	Shipping Assembly - 22 ft	
*1	101216950	Gun, Scallop - 4 ft	N/A
	101216951	Gun, Scallop - 8 ft	
	101216952	Gun, Scallop - 11 ft	
	101216953	Gun, Scallop - 16 ft	
	101216954	Gun, Scallop - 22 ft	

Item	Description	Part No.
*2	Tube, Charge Holder - 4 ft	101216955
	Tube, Charge Holder - 8 ft	101216956
	Tube, Charge Holder - 11 ft	101216957
	Tube, Charge Holder - 16 ft	101216958
	Tube, Charge Holder - 22 ft	101216959
*3	Fixture, Alignment	100158122
*4	Screw, Set 0.25”-20 D x 0.63” L	100007783
*5	Snap Ring	N/A
*6	Screw, Hex Socket 0.25”-20 D x 0.50” L	100028225
7	O-Ring, Buna 90 Duro #329	100001957
	O-Ring, Viton 95 Duro #329	100009538
	O-Ring, Aflas 90 Duro #329	100157504
	O-Ring, Backup #329	100005401
8	O-Ring, Buna 90 Duro #329	100001957
	O-Ring, Viton 95 Duro #329	100009538
	O-Ring, Aflas 90 Duro #329	100157504
	O-Ring, Backup #329	100005401
9	Insert, Alignment (PAI)	100005255
	Insert, Alignment (AAI)	100005222
10	Tandem, Grooved	100005261
11	Tandem, Grooved	100005261
12	Crossover, Box x Pin	100005262
13	Bull Plug	100005267
14	Bi-Directional Booster	See Appendix A
15	Detonating Cord	See Appendix A
16	Charge - 12.5 g RDX DP	100005328
	Charge - 13.0 g RDX DP/LD	100158220
	Charge - 12.5 g HMX DP	100005329
	Charge - 13.0 g HMX DP/LD	100157013
	Charge - 12.5 g PYX/BRX DP	100005330
17	Charge Clip	100005477
18	End Seal	100005251
19	Charge Tube Centralizer	100158123

*Included in shipping assembly.

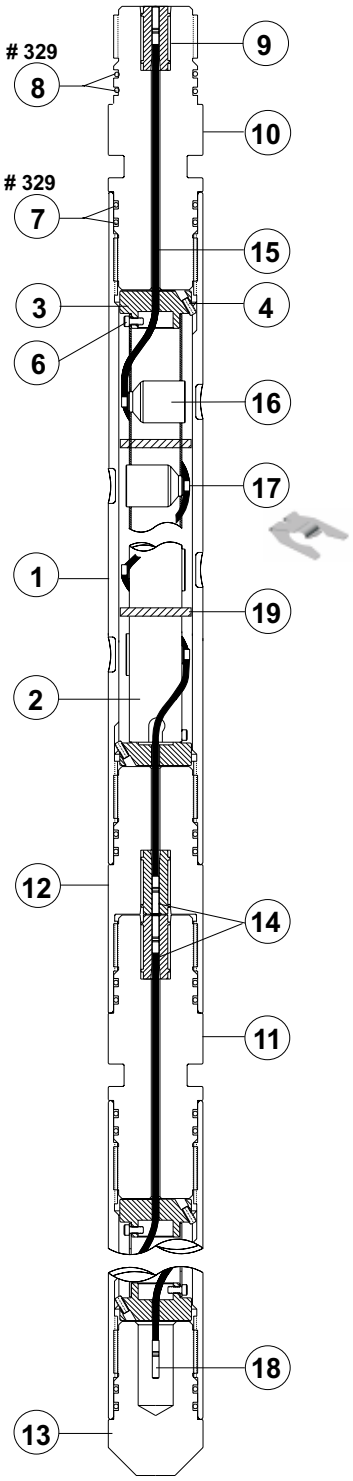

2 3/4-in. 5-spf 180° VannGun™ System

2 $^{3}/_{4}$-in. 5-spf 180° VannGun™ System

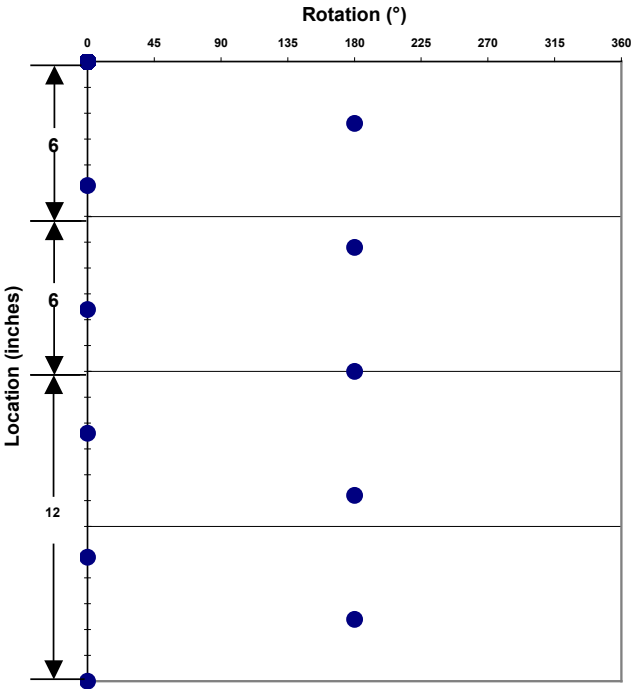

Shot Pattern for 2.75-in.
5-spf 180° Phasing

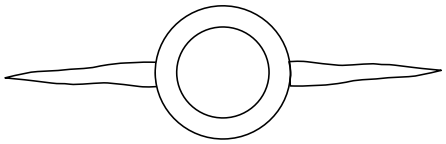

180° Phasing
2 Perforation Planes

VannGun™ Weights

Length ft (m)	4ft (1.22)	8 ft (2.13)	11 ft (3.35)	16 ft (4.57)	22 ft (6.4)
Loaded lb (kg)	39 (17)	80 (36)	110 (50)	161 (73)	222 (101)
Spacer lb (kg)	31 (14)	63 (29)	86 (39)	126 (57)	173 (78)

2 3/4 in. 6-spf 60° VannGun™ System

Item	Part No.	Description	Part No.
	Premium		Standard
	100014186	Shipping Assembly - 4 ft	N/A
	100007986	Shipping Assembly - 7 ft	
	100005207	Shipping Assembly - 11 ft	
	100007987	Shipping Assembly - 21 ft	
*1	100014252	Gun, Scallop - 4 ft	N/A
	100156294	Gun, Scallop - 7 ft	
	100156295	Gun, Scallop - 11 ft	
	100156299	Gun, Scallop - 21 ft	

Item	Description	Part No.
*2	Tube, Charge Holder - 4 ft	100158118
	Tube, Charge Holder - 7 ft	100158119
	Tube, Charge Holder - 11 ft	100158120
	Tube, Charge Holder - 21 ft	100158121
*3	Fixture, Alignment	100158122
*4	Screw, Set 0.25”-20 D x 0.63” L	100007783
*5	Snap Ring	N/A
*6	Screw, Hex Socket 0.25”-20 D x 0.50” L	100028225
7	O-Ring, Buna 90 Duro #329	100001957
	O-Ring, Viton 95 Duro #329	100009538
	O-Ring, Aflas 90 Duro #329	100157504
	O-Ring, Backup #329	100005401
8	O-Ring, Buna 90 Duro #329	100001957
	O-Ring, Viton 95 Duro #329	100009538
	O-Ring, Aflas 90 Duro #329	100009538
	O-Ring, Backup #329	100157504
9	Insert, Alignment (PAI)	100005255
	Insert, Alignment (AAI)	100005222
10	Tandem, Grooved	100005261
11	Tandem, Grooved	100005261
12	Crossover, Box x Pin	100005262
13	Bull Plug	100005267
14	Bi-Directional Booster	See Appendix A
15	Detonating Cord	See Appendix A
16	Charge - 12.5g RDX DP	100005328
	Charge - 13.0g RDX DP/LD	100158220
	Charge - 12.5g HMX DP	100005329
	Charge - 13.0g HMX DP/LD	100157013
	Charge - 12.5g PYX/BRX DP	100005330
17	Charge Clip	100005477
18	End Seal	100005251

*Included in shipping assembly.

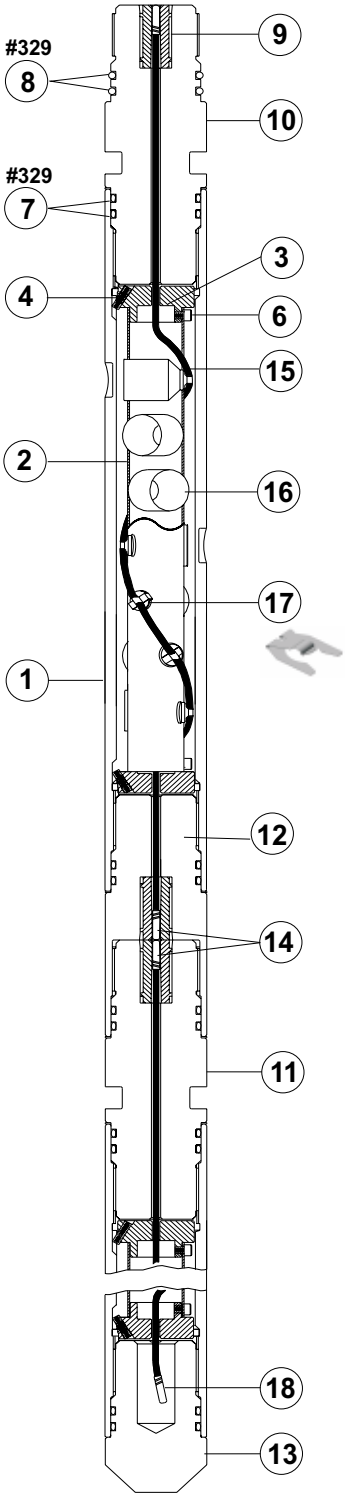

2 3/4-in. 6-spf 60° VannGun™ System

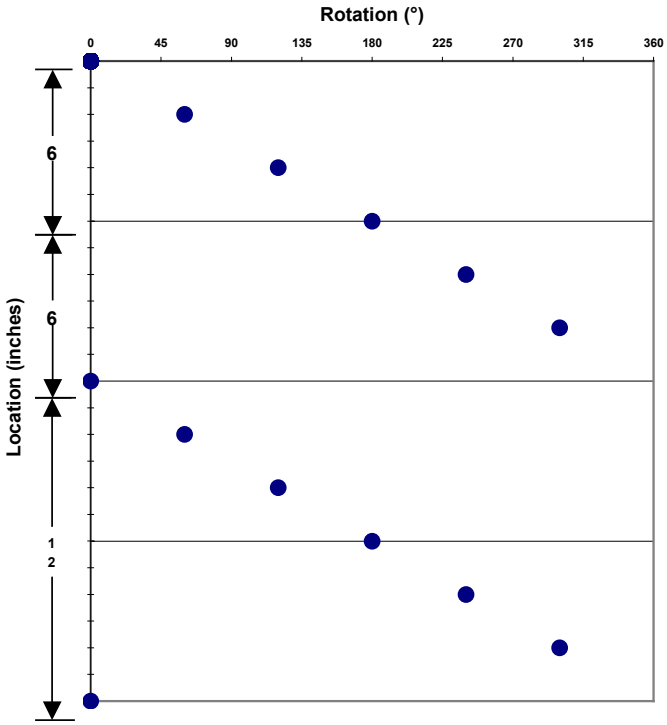

Shot Pattern for 2.75-in.
6-spf 60° Phasing

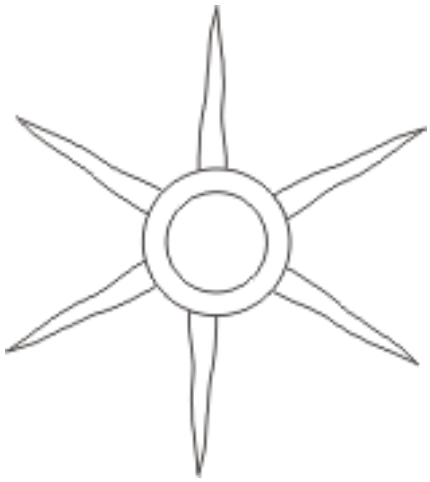

60° Phasing
6 Perforation Planes

VannGun™ Weights

Length ft (m)	4ft (1.22)	7 ft (2.13)	11 ft (3.35)	21 ft (6.4)
Loaded lb (kg)	40 (18)	71 (32)	113 (52)	220 (100)
Spacer lb (kg)	31 (14)	55 (25)	87 (39)	166 (75)

2 3/4-in. 6-spf 60° Lowside VannGun™ System

Item	Part No.	Description	Part No.
	Premium		Standard
	101271110	Shipping Assembly - 4 ft	N/A
	100005204	Shipping Assembly - 7 ft	
	100005205	Shipping Assembly - 11 ft	
	100005206	Shipping Assembly - 21 ft	

*1	101271107	Gun, Scallop - 4 ft	N/A
	100156301	Gun, Scallop - 7 ft	
	100156302	Gun, Scallop - 11 ft	
	100156303	Gun, Scallop - 21 ft	

Item	Description	Part No.
*2	Tube, Charge Holder - 4 ft	101271109
	Tube, Charge Holder - 7 ft	100158124
	Tube, Charge Holder - 11 ft	100158125
	Tube, Charge Holder - 21 ft	100158126
*3	Fixture, Alignment	100158122
*4	Screw, Set 0.25”-20 D x 0.63” L	100007783
*5	Snap Ring	N/A
*6	Screw, Hex Socket 0.25”-20 D x 0.50” L	100028225
7	O-Ring, Buna 90 Duro #329	100001957
	O-Ring, Viton 95 Duro #329	100009538
	O-Ring, Aflas 90 Duro #329	100157504
	O-Ring, Backup #329	100005401
8	O-Ring, Buna 90 Duro #329	100001957
	O-Ring, Viton 95 Duro #329	100009538
	O-Ring, Aflas 90 Duro #329	100157504
	O-Ring, Backup #329	100005401
9	Insert, Alignment (PAI)	100005255
	Insert, Alignment (AAI)	100005222
10	Tandem, Grooved	100005261
11	Tandem, Grooved	100005261
12	Crossover, Box x Pin	100005262
13	Bull Plug	100005267
14	Bi-Directional Booster	See Appendix A
15	Detonating Cord	See Appendix A
16	Charge - 12.5g RDX DP	100005328
	Charge - 13.0g RDX DP/LD	100158220
	Charge - 12.5g HMX DP	100005329
	Charge - 13.0g HMX DP/LD	100157013
	Charge - 12.5g PYX/BRX DP	100005330
17	Charge Clip	100005477
18	End Seal	100005251
19	Charge Tube Centralizer	100158123

*Included in shipping assembly.

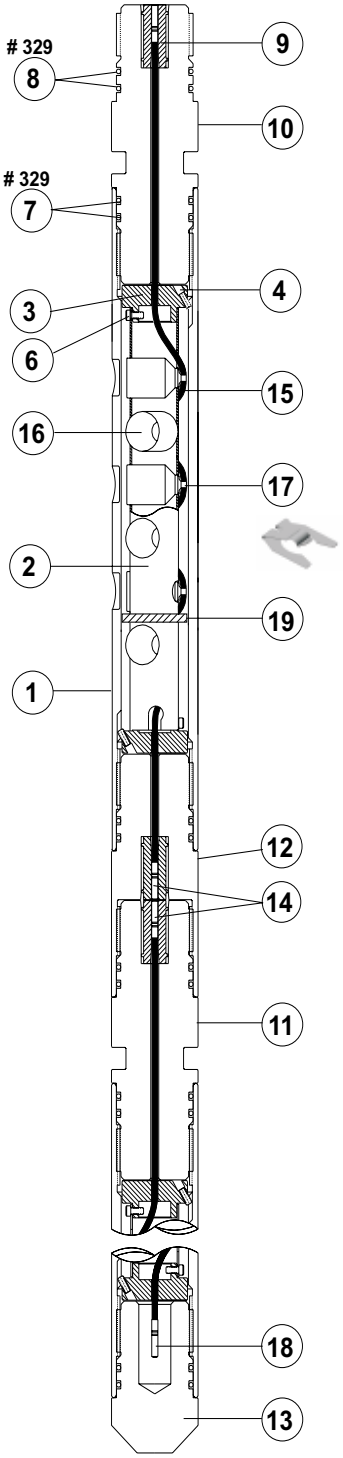

2 3/4-in. 6-spf 60° Lowside VannGun™ System

2 $^{3}/_{4}$-in. 6-spf 60° Lowside VannGun™ System

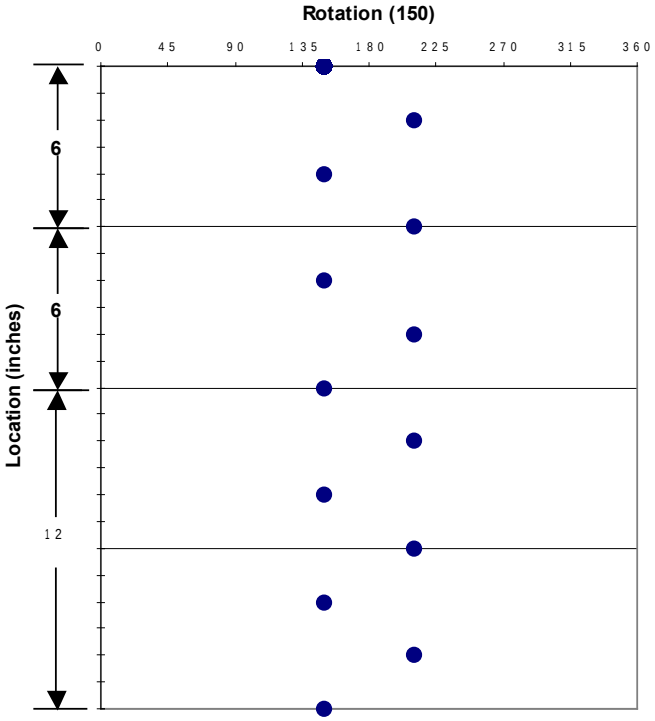

Shot Pattern for 2.75-in.
6-spf 60 Phasing

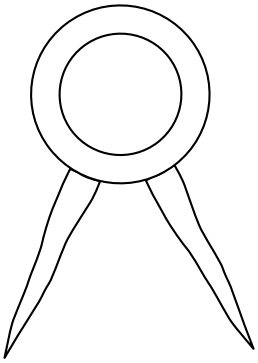

60° Phasing
2 Perforation Planes Lowside

VannGun™ Weights

Length ft (m)	4ft (1.22)	7 ft (2.13)	11 ft (3.35)	21 ft (6.4)
Loaded lb (kg)	40 (18)	71 (32)	113 (52)	220 (100)
Spacer lb (kg)	31 (14)	55 (25)	87 (39)	166 (75)

2 3/4-in. 6-spf 60° Lowside *Millennium*™ VannGun™ System

Item	Part No.	Description	Part No.
	Premium		Standard
	101284945	Shipping Assembly - 4 ft	N/A
	101284947	Shipping Assembly - 8 ft	
	101284948	Shipping Assembly - 11 ft	
	101284949	Shipping Assembly - 16 ft	
	101284950	Shipping Assembly - 22 ft	

*1	101284960	Gun, Scallop - 4 ft	N/A
	101284962	Gun, Scallop - 8 ft	
	101284963	Gun, Scallop - 11ft	
	101284964	Gun, Scallop - 16 ft	
	101284965	Gun, Scallop - 22 ft	

Item	Description	Part No.
*2	Tube, Charge Holder - 4 ft	101216015
	Tube, Charge Holder - 8 ft	101216016
	Tube, Charge Holder - 11ft	101216017
	Tube, Charge Holder - 16 ft	101216018
	Tube, Charge Holder - 22 ft	101216019
*3	Fixture, Alignment	101234416
*4	Screw, Set 0.25”-20 D x 0.50” L	100028808
*5	Snap Ring	N/A
*6	Screw, Button Head 0.25”-20 D x 0.38” L	100110942
7	O-Ring, Buna 90 Duro #329	100001957
	O-Ring, Viton 95 Duro #329	100009538
	O-Ring, Aflas 90 Duro #329	100157504
	O-Ring, Backup #329	100005401
8	O-Ring, Buna 90 Duro #329	100001957
	O-Ring, Viton 95 Duro #329	100009538
	O-Ring, Aflas 90 Duro #329	100157504
	O-Ring, Backup #329	100005401
9	Insert, Alignment	100005222
10	Tandem, Grooved	100005261
11	Tandem, Grooved	100005261
12	Crossover, Box x Pin	100005262
13	Bull Plug	100005267
14	Bi-Directional Booster	See Appendix A
15	Detonating Cord	See Appendix A
16	Charge - 15.0g HMX ***Millennium***	101233817
17	Charge Clip	100157947
18	End Seal	100005251

*Included in shipping assembly.

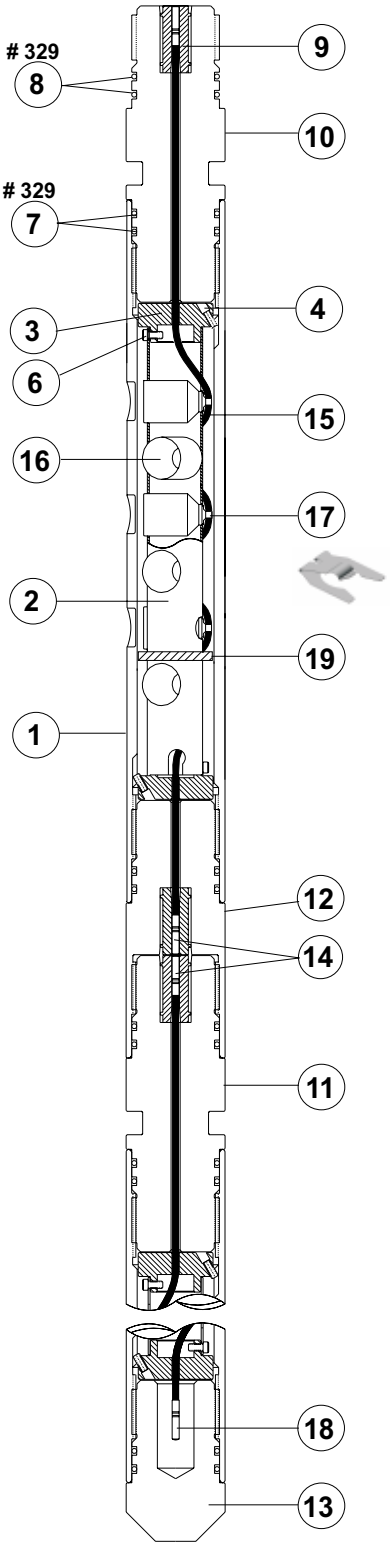

2 3/4-in. 6-spf 60° Lowside Millennium™ VannGun™ System

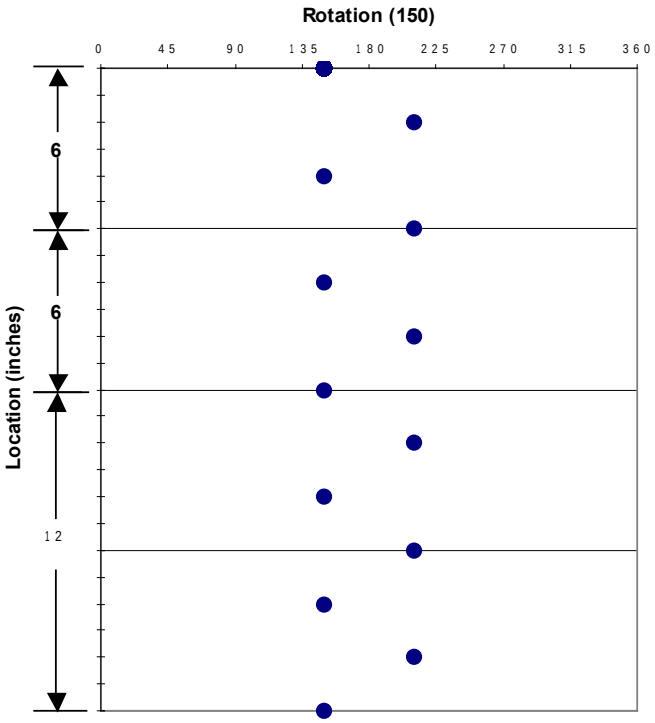

Shot Pattern for 2.75-in.
6-spf 60 Phasing

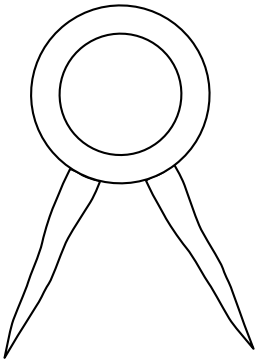

60° Phasing
2 Perforation Planes Lowside

VannGun™ Weights

Length ft (m)	4ft (1.22)	7 ft (2.13)	11 ft (3.35)	21 ft (6.4)
Loaded lb (kg)	40 (18)	71 (32)	113 (52)	220 (100)
Spacer lb (kg)	31 (14)	55 (25)	87 (39)	166 (75)

2 3/4-in. 6-spf 60° SDP VannGun™ System

Item	Part No.	Description	Part No.
	Premium		Standard
	100155853	Shipping Assembly - 4 ft	N/A
	101005816	Shipping Assembly - 8 ft	
	100010400	Shipping Assembly - 11 ft	
	101005819	Shipping Assembly - 16 ft	
	100155854	Shipping Assembly - 22 ft	
*1	100156320	Gun, Scallop - 4 ft	N/A
	101005817	Gun, Scallop - 8 ft	
	100156321	Gun, Scallop - 11 ft	
	101005820	Gun, Scallop - 16 ft	
	100156322	Gun, Scallop - 22 ft	

Item	Description	Part No.
*2	Tube, Charge Holder - 4 ft	100156523
	Tube, Charge Holder - 8 ft	101005818
	Tube, Charge Holder - 11 ft	100156524
	Tube, Charge Holder - 16 ft	101005821
	Tube, Charge Holder - 22 ft	100156525
*3	Fixture, Alignment SDP	100156526
*4	Screw, Set 0.25”-20 D x 0.50” L	100028808
*5	Snap Ring	N/A
*6	Screw, Button Head 0.25”-20 D x 0.38” L	100110942
7	O-Ring, Buna 90 Duro #329	100001957
	O-Ring, Viton 95 Duro #329	100009538
	O-Ring, Aflas 90 Duro #329	100157504
	O-Ring, Backup #329	100005401
8	O-Ring, Buna 90 Duro #329	100001957
	O-Ring, Viton 95 Duro #329	100009538
	O-Ring, Aflas 90 Duro #329	100157504
	O-Ring, Backup #329	100005401
9	Insert, Alignment (PAI)	100005255
	Insert, Alignment (AAI)	100005222
10	Tandem, Grooved	100005261
11	Tandem, Grooved	100005261
12	Crossover, Box x Pin	100005262
13	Bull Plug	100005267
14	Bi-Directional Booster	See Appendix A
15	Detonating Cord	See Appendix A
16	Charge - 14.7g RDX SDP	100157026
	Charge - 14.7g RDX BH	101206793
	Charge - 14.7g HMX SDP	100010399
	Charge - 15.0 g HNS SDP	101251723
	Charge - 16.0g PYX/BRX SDP	101201843
17	Charge Clip	N/A
18	End Seal	100005251

*Included in shipping assembly.

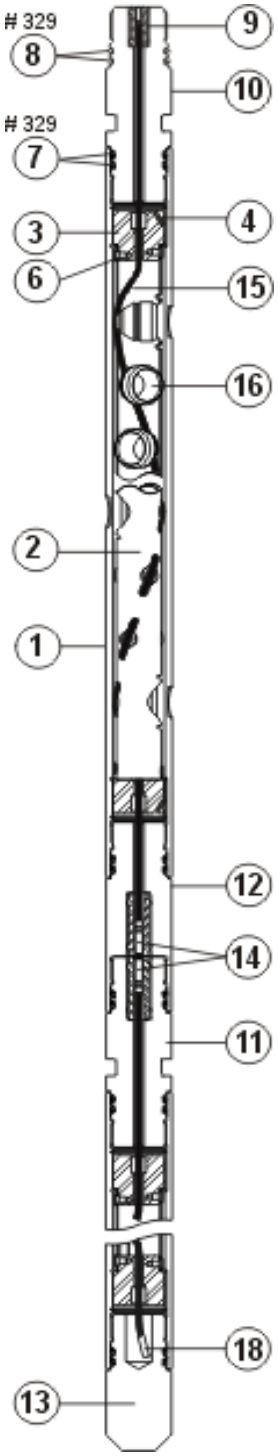

2 3/4-in. 6-spf 60° SDP VannGun™ System

2 $^3/_4$-in. 6-spf 60° SDP VannGun™ System

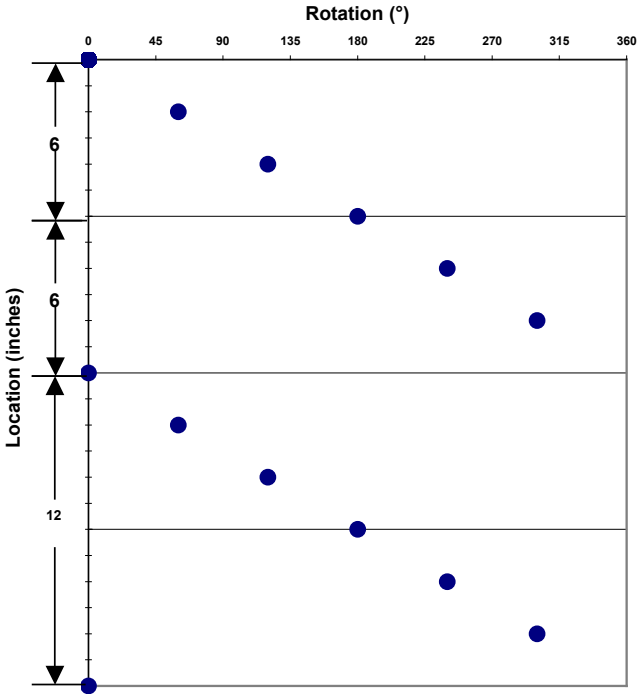

Shot Pattern for 2.75-in.
6-spf 60° Phasing

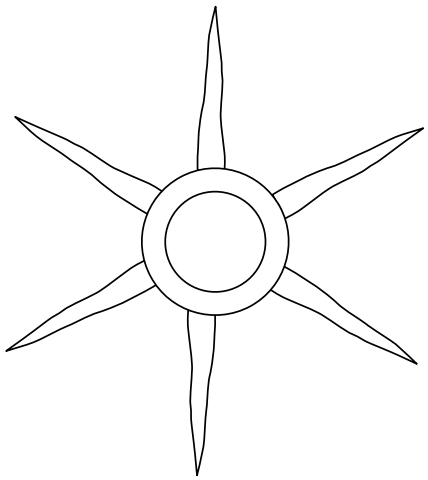

60° Phasing
6 Perforation Planes

VannGun™ Weights

Length ft (m)	4ft (1.22)	8 ft (2.44)	11 ft (3.35)	16 ft (4.88)	22 ft (6.71)
Loaded lb (kg)	41 (19)	84 (38)	116 (53)	169 (77)	235 (108)
Spacer lb (kg)	32 (14)	64 (29)	87 (40)	127 (58)	175 (79)

2 7/8-in. 4-spf 60° VannGun™ System

Item	Description	Part No.
	Shipping Assembly - 4 ft	101434792
	Shipping Assembly - 7 ft	101434796
	Shipping Assembly - 11 ft	101434801
	Shipping Assembly - 15 ft	101434814
	Shipping Assembly - 21 ft	101434833
*1	Gun, Scallop - 4 ft	101434793
	Gun, Scallop - 7 ft	101434798
	Gun, Scallop - 11 ft	101434802
	Gun, Scallop - 15 ft	101434831
	Gun, Scallop - 21 ft	101434834
*2	Tube, Charge Holder - 4 ft	101434794
	Tube, Charge Holder - 7 ft	101434799
	Tube, Charge Holder - 11 ft	101434803
	Tube, Charge Holder - 15 ft	101434832
	Tube, Charge Holder - 21 ft	101434835
*3	Fixture, Alignment	101244584
*4	Snap Ring	101246147
*5	Screw, Cap #10 x 0.38" L	101236979
*6	Screw, Set 0.25" D x 0.625" L	100007783
7	Firing Head Crossover - Vann™	101245523
8	Firing Head Crossover - GO® Style	101283058
9	Bull Plug	101246199
10	Tandem, Grooved	101244714
11	O-Ring, #228 Buna, 90 Duro	100001999
	O-Ring, #228 Viton, 95 Duro	100012311
	Backup, O-Ring #228	101283258
12	O-Ring, #329 Buna, 90 Duro	100001957
	O-Ring, #329 Viton, 95 Duro	100009538
	Backup, O-Ring #329	100005401
*13	Kit, Booster Hardware	101232002
14	Charge - 15 g ***MILLENNIUM***™ HMX	101233817
15	Detonating Cord	See Appendix A
16	Bi-Directional Booster	See Appendix A
17	Charge Clip	100157947
18	Alignment Insert	100005255
19	End Seal	100005251

*Included in shipping assembly.

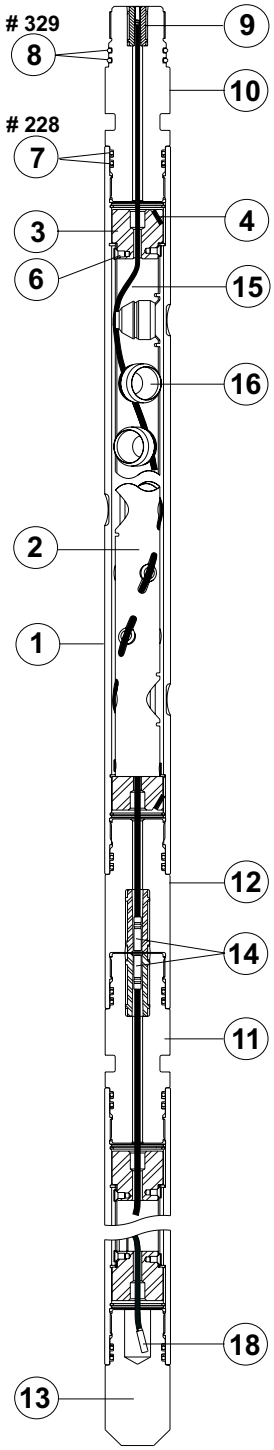

2 7/8-in. 4-spf 60° VannGun™ System

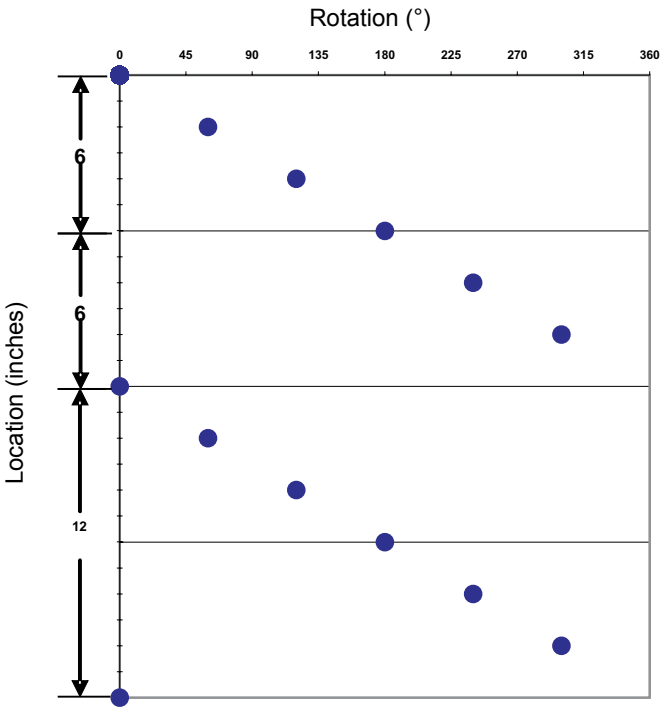

Shot Pattern for 2.875-in.
4-spf 60° Phasing

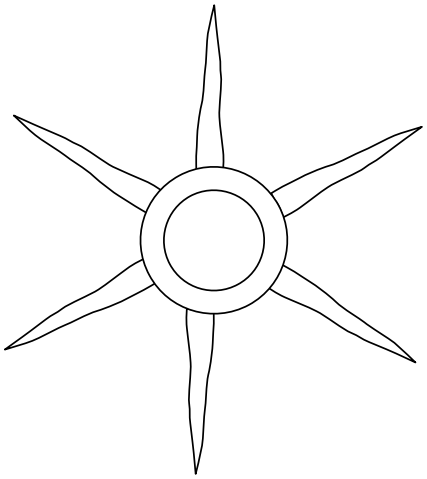

60° Phasing
6 Perforation Planes

VannGun™ Weights-lb (kg)

Length	4ft	8 ft	11 ft	16 ft	22 ft
Loaded	39 (17)	80 (36)	110 (50)	161 (73)	222 (101)
Spacer	31 (14)	63 (29)	86 (39)	126 (57)	173 (78)

2 7/8-in. 6-spf 60° Millenium VannGun™ System

Item	Part No. Premium	Description	Part No.
	101367065	Shipping Assembly - 4ft	N/A
	101367068	Shipping Assembly - 8ft	
	101367069	Shipping Assembly - 11ft	
	101367070	Shipping Assembly - 16ft	
	101367071	Shipping Assembly - 22ft	

*1	101268179	Gun, Scallop - 4ft	N/A
	101268181	Gun, Scallop - 8ft	
	101268183	Gun, Scallop - 11ft	
	101268185	Gun, Scallop - 16ft	
	101268186	Gun, Scallop - 22ft	

Item	Description	Part No.
*2	Tube, Charge Holder - 4ft	101367073
	Tube, Charge Holder - 8ft	101367076
	Tube, Charge Holder - 11ft	101367078
	Tube, Charge Holder - 16ft	101367081
	Tube, Charge Holder - 22ft	101367083
*3	Fixture, Alignment SDP	101371892
*4	Screw, Set 0.25”-20 D x 0.75” L	100028806
*5	Snap Ring	N/A
*6	Screw, Cap 0.25”-20 D x .50” L	101258556
7	O-Ring, Buna 90 Duro #228	100001999
	O-Ring, Viton 95 Duro #228	100012311
	O-Ring, Aflas 90 Duro #228	101294803
	O-Ring, Backup #228	101383258
8	O-Ring, Buna 90 Duro #329	100001957
	O-Ring, Viton 95 Duro #329	100009538
	O-Ring, Aflas 90 Duro #329	100157504
	O-Ring, Backup #329	100005401
9	Insert, Alignment (PAI)	100005255
	Instert, Alignment (AAI)	100005222
10	Tandem, Grooved	101245523
11	Tandem, Grooved	101268301
12	Crossover, Box x Pin	101281945
13	Bull Plug	101268304
14	Bi-Directional Booster	See Appendix A
15	Detonating Cord	See Appendix A
16	Charge - 18.5g HNS Millennium	101388407
17	Charge Clip	N/A
18	End Seal	100005251

*Included in shipping assembly.

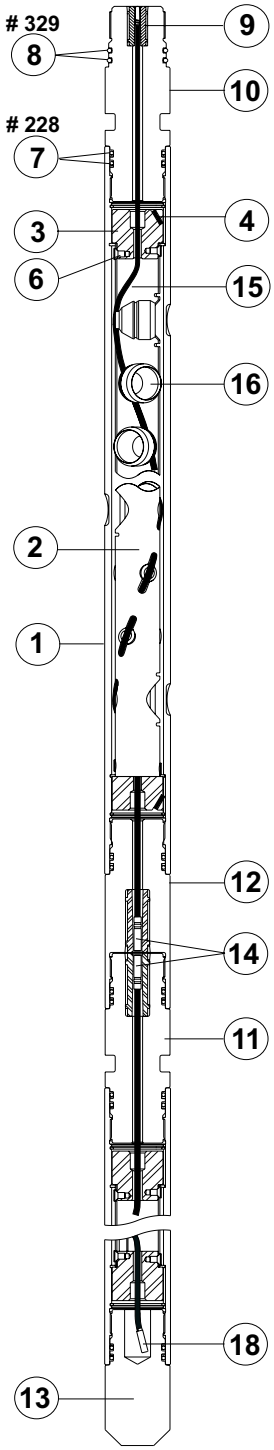

2 7/8-in. 6-spf 60° Millennium VannGun™ System

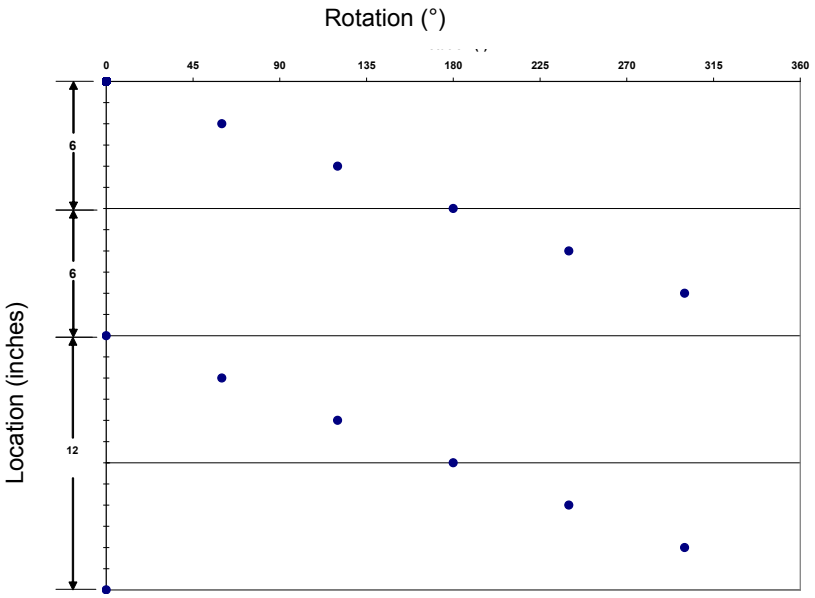

Shot Pattern for 2.875-in.
6-spf 60° Phasing

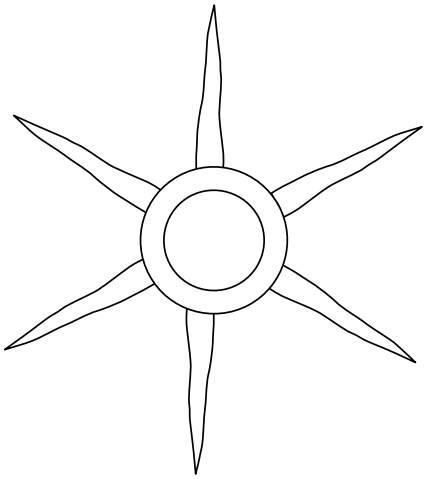

60° Phasing
6 Perforation Planes

VannGun™ Weights-lb (kg)

Length	4ft	8 ft	11 ft	16 ft	22 ft
Loaded	39 (17)	80 (36)	110 (50)	161 (73)	222 (101)
Spacer	31 (14)	63 (29)	86 (39)	126 (57)	173 (78)

2 3/4-in. 6-spf 60° *Millennium*™ VannGun™ System

Item	Part No.	Description	Part No.
	Premium		Standard
	101234432	Shipping Assembly - 4 ft	N/A
	101234433	Shipping Assembly - 8 ft	
	101234435	Shipping Assembly - 11 ft	
	101234437	Shipping Assembly - 16 ft	
	101234438	Shipping Assembly - 22 ft	
*1	100156320	Gun, Scallop - 4 ft	N/A
	101005817	Gun, Scallop - 8 ft	
	100156321	Gun, Scallop - 11 ft	
	101005820	Gun, Scallop - 16 ft	
	100156322	Gun, Scallop - 22 ft	

Item	Description	Part No.
*2	Tube, Charge Holder - 4 ft	101234404
	Tube, Charge Holder - 8 ft	101234406
	Tube, Charge Holder - 11 ft	101234407
	Tube, Charge Holder - 16 ft	101234408
	Tube, Charge Holder - 22 ft	101234409
*3	Fixture, Alignment	101234416
*4	Screw, Set 0.25”-20 D x 0.50” L	100028808
*5	Snap Ring	N/A
*6	Screw, Button Head 0.25”-20 D x 0.38” L	100110942
7	O-Ring, Buna 90 Duro #329	100001957
	O-Ring, Viton 95 Duro #329	100009538
	O-Ring, Aflas 90 Duro #329	100157504
	O-Ring, Backup #329	100005401
8	O-Ring, Buna 90 Duro #329	100001957
	O-Ring, Viton 95 Duro #329	100009538
	O-Ring, Aflas 90 Duro #329	100157504
	O-Ring, Backup #329	100005401
9	Insert, Alignment (PAI)	100005255
	Insert, Alignment (AAI)	100005222
10	Tandem, Grooved	100005261
11	Tandem, Grooved	100005261
12	Crossover, Box x Pin	100005262
13	Bull Plug	100005267
14	Bi-Directional Booster	See Appendix A
15	Detonating Cord	See Appendix A
16	Charge - 15.0g HMX ***Millennium***™	101233817
17	Charge Clip	100157947
18	End Seal	100005251

*Included in shipping assembly.

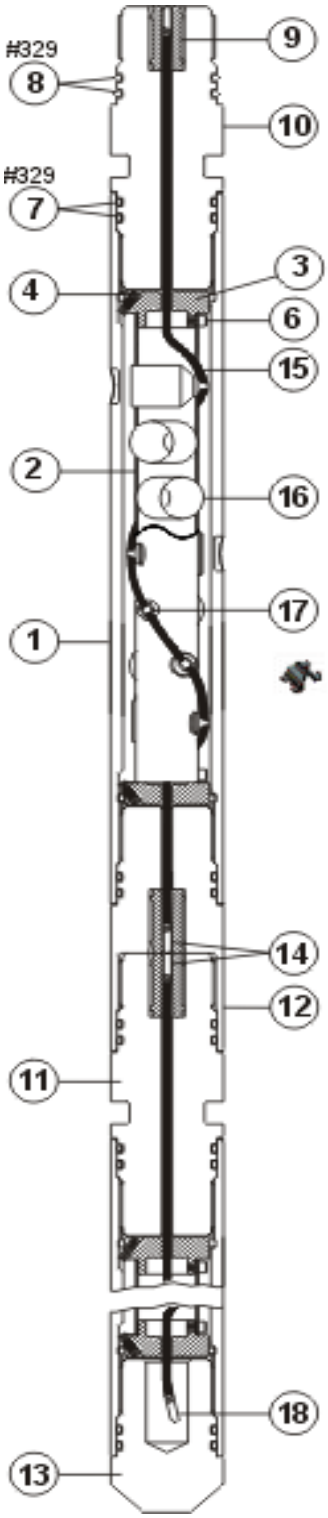

2 3/4-in. 6-spf 60° Millennium™ VannGun™ System

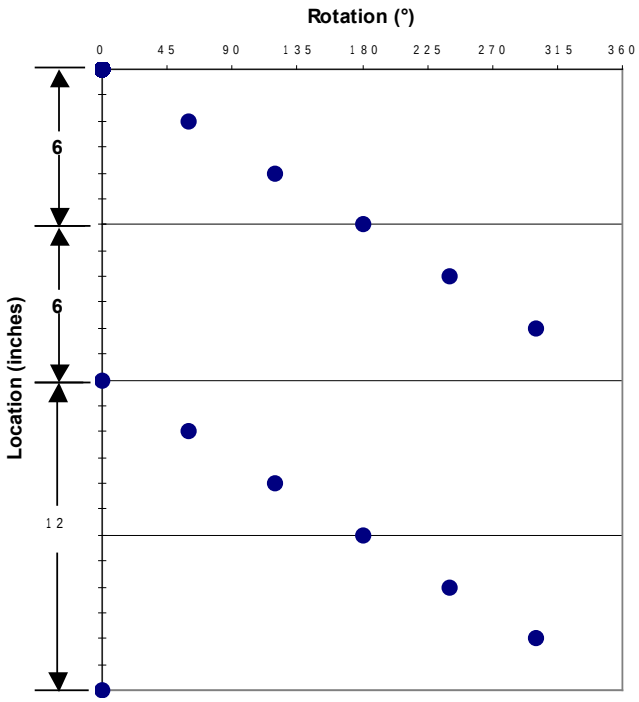

Shot Pattern for 2.75-in.
6-spf 60° Phasing

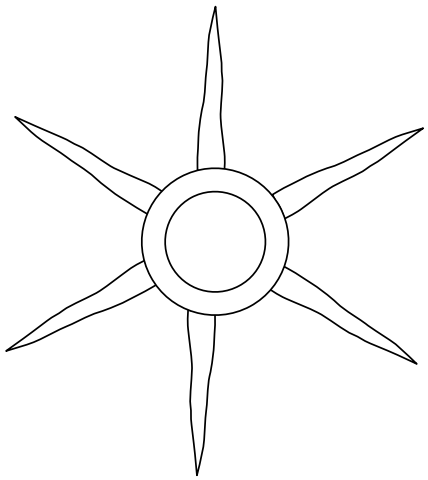

60° Phasing
6 Perforation Planes

VannGun™ Weights

Length ft (m)	4ft (1.22)	8 ft (2.44)	11 ft (3.35)	16 ft (4.88)	22 ft (6.71)
Loaded lb (kg)	56 (25)	113 (51)	156 (71)	227 (103)	131 (142)
Spacer lb (kg)	47 (21)	94 (42)	130 (59)	189 (86)	259 (118)

2 7/8-in. 6-spf 60° *Millennium*™ VannGun™ System

Item	Part No.	Description	Part No.
	Premium		Standard
	101268193	Shipping Assembly - 4ft	N/A
	101268194	Shipping Assembly - 8ft	
	101268195	Shipping Assembly - 11ft	
	101268196	Shipping Assembly - 16ft	
	101268197	Shipping Assembly - 22ft	
*1	101268179	Gun, Scallop - 4ft	N/A
	101268181	Gun, Scallop - 8ft	
	101268183	Gun, Scallop - 11ft	
	101268185	Gun, Scallop - 16ft	
	101268186	Gun, Scallop - 22ft	

Item	Description	Part No.
*2	Tube, Charge Holder - 4ft	101234404
	Tube, Charge Holder - 8ft	101234406
	Tube, Charge Holder - 11ft	101234407
	Tube, Charge Holder - 16ft	101234408
	Tube, Charge Holder - 22ft	101234409
*3	Fixture, Alignment	101268280
*4	Screw, Set 0.25”-20 D x 0.50” L	100028808
*5	Snap Ring	N/A
*6	Screw, Button Head 0.25”-20 D x 0.38” L	100110942
7	O-Ring, Buna 90 Duro #228	100001999
	O-Ring, Viton 95 Duro #228	100012311
	O-Ring, Aflas 90 Duro #228	N/A
	O-Ring, Backup #228	101283258
8	O-Ring, Buna 90 Duro #329	100001957
	O-Ring, Viton 95 Duro #329	100009538
	O-Ring, Aflas 90 Duro #329	100157504
	O-Ring, Backup #329	100005401
9	Insert, Alignment (PAI)	100005255
	Instert, Alignment (AAI)	100005222
10	Crossover, Firing Head	101245523
11	Tandem, Grooved	101268301
12	Crossover, Box x Pin	101281945
13	Bull Plug	101268304
14	Bi-Directional Booster	See Appendix A
15	Detonating Cord	See Appendix A
16	Charge - 15.0g HMX ***Millennium***®	101233817
17	Charge Clip	100157947
18	End Seal	100005251

*Included in shipping assembly.

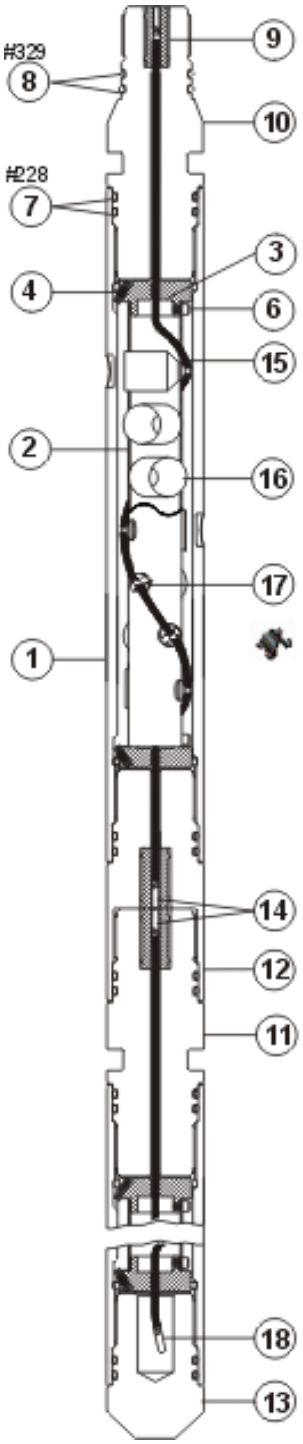

2 7/8-in. 6-spf 60° Millennium™ VannGun™ System

2 $^{7}/_{8}$-in. 6-spf 60° *Millennium*™ VannGun™ System

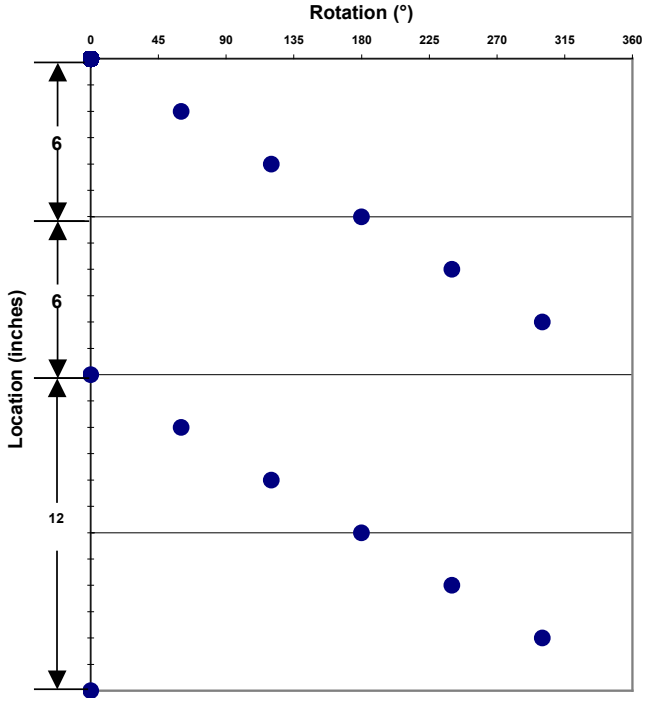

Shot Pattern for 2.875-in.
6-spf 60° Phasing

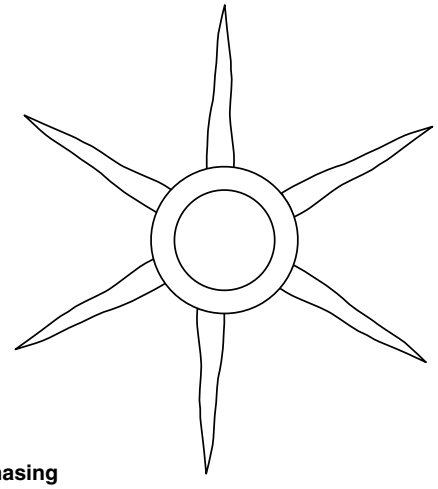

60° Phasing
6 Perforation Planes

VannGun™ Weights-lb (kg)

Length	4ft (1.22)	8 ft (2.44)	11 ft (3.35)	16 ft (4.88)	22 ft (6.71)
Loaded	56 (25)	113 (51)	156 (71)	227 (103)	131 (142)
Spacer	47 (21)	94 (42)	130 (59)	189 (86)	259 (118)

3 $^{3}/_{8}$-in. 4-spf 60° SDP VannGun™ System

Item	Part No.	Description	Part No.
	Premium		Standard
	101237952	Shipping Assembly - 4ft	101202250
	101237955	Shipping Assembly - 8ft	101202318
	101237957	Shipping Assembly - 11ft	101202319
	100014197	Shipping Assembly - 16ft	101202323
	101237959	Shipping Assembly - 22ft	101202325
*1	101237951	Gun, Scallop - 4ft	101201076
	101237954	Gun, Scallop - 8ft	101201077
	101237956	Gun, Scallop - 11ft	101201078
	100156354	Gun, Scallop - 16ft	101201079
	101237958	Gun, Scallop - 22ft	101201080

Item	Description	Part No.
*2	Tube, Charge Holder - 4ft	101204258
	Tube, Charge Holder - 8ft	101204264
	Tube, Charge Holder - 11ft	101204265
	Tube, Charge Holder - 16ft	100156542
	Tube, Charge Holder - 22ft	101204273
*3	Fixture, Alignment	100156475
*4	Screw, Set 0.25”-20 D x 0.63” L	100007783
*5	Charge Tube Cushion	100007998
*6	Screw, Hex Socket 0.25”-20 D x 0.50” L	100028225
7	O-Ring, Buna 90 Duro #334	100001963
	O-Ring, Viton 95 Duro #334	100009382
	O-Ring, Aflas 90 Duro #334	13416
	O-Ring, Backup #334	100005381
8	O-Ring, Buna 90 Duro #334	100001963
	O-Ring, Viton 95 Duro #334	100009382
	O-Ring, Aflas 90 Duro #334	13416
	O-Ring, Backup #334	100005381
9	Insert, Alignment (PAI)	100005255
	Instert, Alignment (AAI)	100005222
10	Tandem, Grooved	100005252
11	Tandem, Grooved	100005252
12	Crossover, Box x Pin	100005256
13	Bull Plug	100005258
14	Bi-Directional Booster	See Appendix A
15	Detonating Cord	See Appendix A
16	Charge - 24.0g RDX SDP	100008014
	Charge - 32.0g RDX DP	100005322
	Charge - 25.0g HMX SDP	100008249
	Charge - 25.0g HMX Millennium®	101233819
	Charge - 32.0g HMX DP	100005327
	Charge - 24.2g PYX SDP	100008015
	Charge - 24.0g RDX SDP/LD	101293450
17	Charge Clip	100005336
18	End Seal	100005251

*Included in shipping assembly.

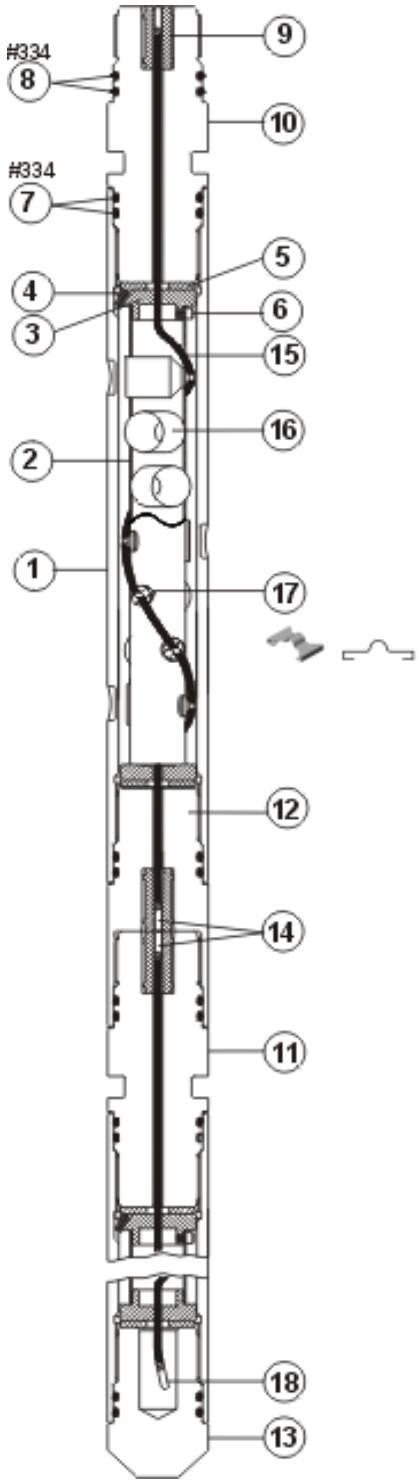

3 $^{3}/_{8}$-in. 4-spf 60° SDP VannGun™ System

3 $^{3}/_{8}$-in. 4-spf 60° SDP VannGun™ System

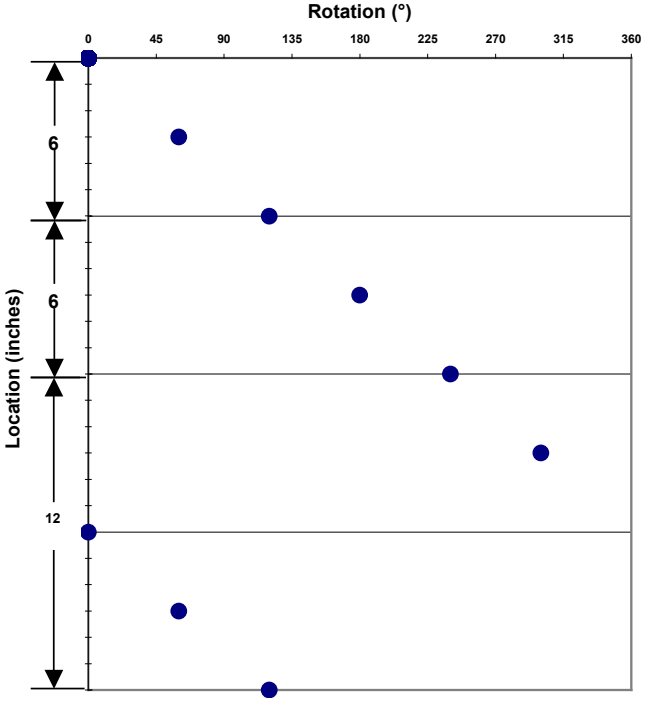

Shot Pattern for 3.37- in.
4-spf 60° Phasing

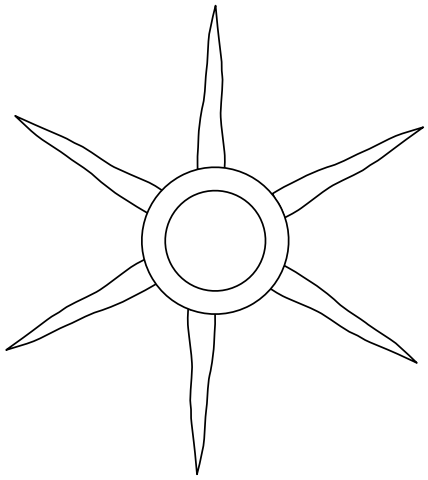

60° Phasing
6 Perforation Planes

VannGun™ Weights

Length ft (m)	4ft (1.22)	8 ft (2.44)	11 ft (3.35)	16 ft (4.88)	22 ft (6.71)
Loaded lb (kg)	56 (25)	113 (51)	156 (71)	227 (103)	131 (142)
Spacer lb (kg)	47 (21)	94 (42)	130 (59)	189 (86)	259 (118)

3 3/8-in. 4-spf 90° SDP VannGun™ System

Item	Part No.	Description	Part No.
	Premium		Standard
	100005215	Shipping Assembly - 4ft	101201678
	100007989	Shipping Assembly - 8ft	101201684
	100005214	Shipping Assembly - 11ft	101202183
	100007990	Shipping Assembly - 16ft	101202203
	100005216	Shipping Assembly - 22ft	101202205
*1	100156290	Gun, Scallop - 4ft	101201071
	100156288	Gun, Scallop - 8ft	101201072
	100005244	Gun, Scallop - 11ft	101201073
	100156289	Gun, Scallop - 16ft	101201074
	100014251	Gun, Scallop - 22ft	101201075

Item	Description	Part No.
*2	Tube, Charge Holder - 4ft	101235917
	Tube, Charge Holder - 7ft	101235920
	Tube, Charge Holder - 11ft	101235921
	Tube, Charge Holder - 15ft	101235922
	Tube, Charge Holder - 21ft	101235923
*3	Fixture, Alignment	101235706
*4	Screw, Set #10-32 x 0.50" L	100028832
*5	Snap Ring	101236795
*6	Screw, Socket Head #10-32 X 0.38" L	101236979
7	O-Ring, Buna 90 Duro #215	100001937
	O-Ring, Viton 95 Duro #215	100064810
	O-Ring, Aflas 90 Duro #215	101292868
	O-Ring, Backup #215	101283230
8	O-Ring, Buna 90 Duro #218	100001951
	O-Ring, Viton 95 Duro #218	100064830
	O-Ring, Aflas 90 Duro #218	101233079
	O-Ring, Backup #218	101227694
9	Insert, Alignment (Miniature PAI)	100005277
	Instert, Alignment (Miniature AAI)	100005276
10	Crossover, Firing Head	100156707
11	Tandem, Grooved	100156709
12	Crossover, Box x Pin	100156708
13	Bull Plug	120005293
14	Bi-Directional Booster	See Appendix A
15	Detonating Cord	See Appendix A
16	Charge - 3.4g HMX ***Millennium***®	100157028
17	Teflon Grommet	100157596
18	End Seal	100005251

*Included in shipping assembly.

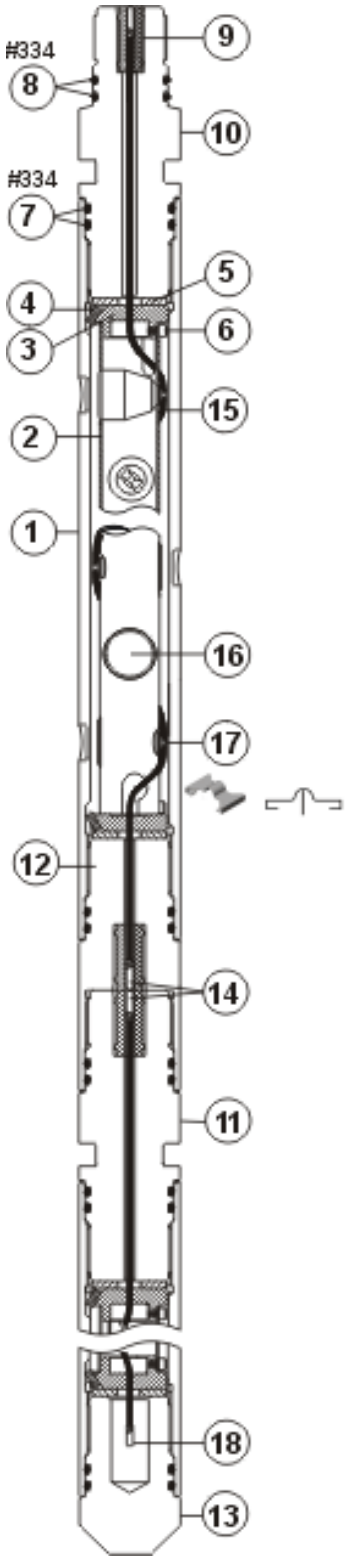

3 3/8-in. 4-spf 90° SDP VannGun™ System

3 $^{3}/_{8}$-in. 4-spf 90° SDP VannGun™ System

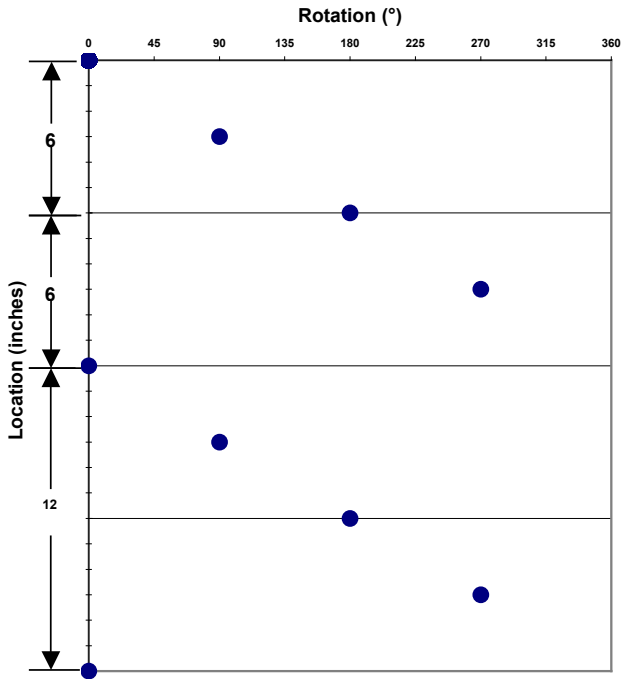

Shot Pattern for 3.375-in.
4-spf 90° Phasing

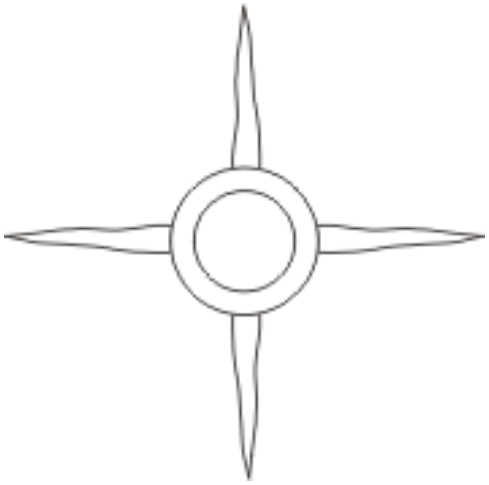

90° Phasing
4 Perforation Planes

VannGun™ Weights

Length	4ft (1.22)	8 ft (2.44)	11 ft (3.35)	16 ft (4.88)	22 ft (6.71)
Loaded	56 (25)	113 (51)	156 (71)	227 (103)	131 (142)
Spacer	47 (21)	94 (42)	130 (59)	189 (86)	259 (118)

3 3/8-in. 4-spf 180° VannGun™ System

Item	Part No.	Description	Part No.
	Premium		Standard
	101237973	Shipping Assembly - 4ft	101234115
	101228578	Shipping Assembly - 8ft	101234116
	101228579	Shipping Assembly - 11ft	101234117
	27317	Shipping Assembly - 16ft	101234118
	100155885	Shipping Assembly - 22ft	101234119

*1	101237939	Gun, Scallop - 4ft	101233754
	101228580	Gun, Scallop - 8ft	101233752
	100156325	Gun, Scallop - 11ft	101233746
	101204543	Gun, Scallop - 16ft	101233737
	100156324	Gun, Scallop - 22ft	101233733

Item	Description	Part No.
*2	Tube, Charge Holder - 4 ft	101234090
	Tube, Charge Holder - 8 ft	101228581
	Tube, Charge Holder - 11 ft	101228582
	Tube, Charge Holder - 16 ft	101204561
	Tube, Charge Holder - 22 ft	100156434
*3	Fixture, Alignment	100005248
*4	Screw, Set 0.25”-20 D x 0.63” L	100007783
*5	Charge Tube Cushion	100007998
*6	Screw, Hex Socket 0.25”-20 D x 0.50” L	100028225
7	O-Ring, Buna 90 Duro #334	100001963
	O-Ring, Viton 95 Duro #334	100009382
	O-Ring, Aflas 90 Duro #334	13416
	O-Ring, Backup #334	100005381
8	O-Ring, Buna 90 Duro #334	100001963
	O-Ring, Viton 95 Duro #334	100009382
	O-Ring, Aflas 90 Duro #334	13416
	O-Ring, Backup #334	100005381
9	Insert, Alignment (PAI)	100005255
	Insert, Alignment (AAI)	100005222
10	Tandem, Grooved	100005252
11	Tandem, Grooved	100005252
12	Crossover, Box x Pin	100005256
13	Bull Plug	100005258
14	Bi-Directional Booster	See Appendix A
15	Detonating Cord	See Appendix A
16	Charge - 24.0g RDX BH	100005321
	Charge - 24.0g HMX BH	100157017
	Charge - 22.0g RDX DP	100005333
	Charge - 26.0g HMX DP	100005332
	Charge - 26.0g PYX/BRX DP	100005331
17	Charge Clip	100156506
18	End Seal	100005251

*Included in shipping assembly.

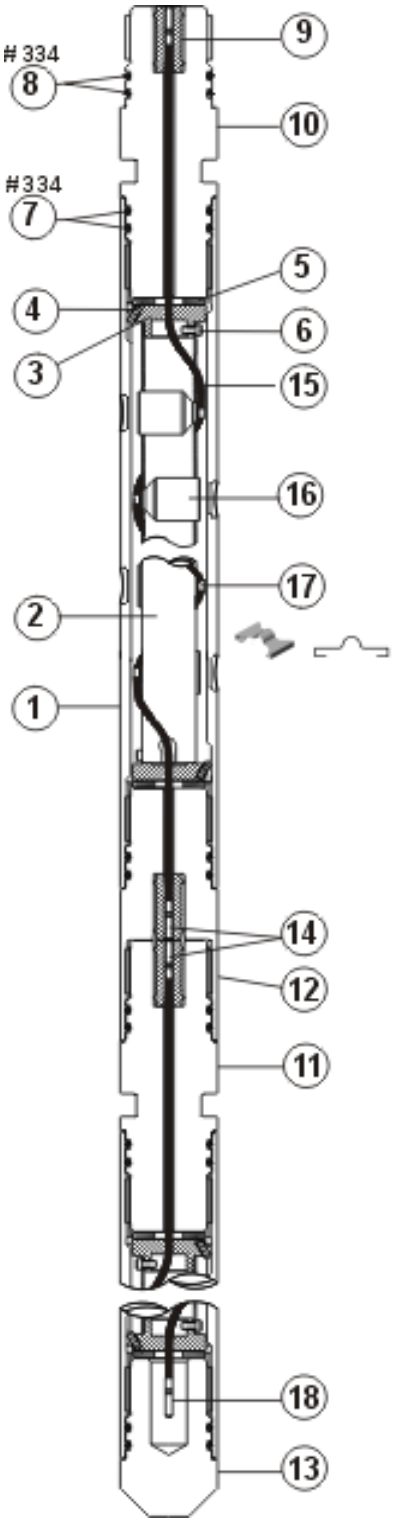

3 3/8-in. 4-spf 180° VannGun™ System

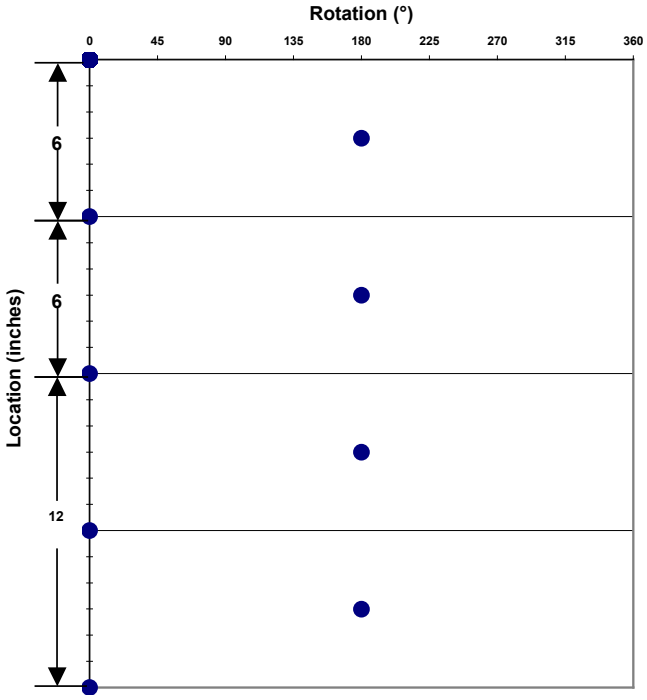

Shot Pattern for 3.375-in.
4-spf 180° Phasing

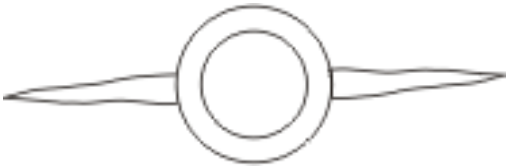

180° Phasing
2 Perforation Planes

VannGun™ Weights

Length ft (m)	4ft (1.22)	8 ft (2.44)	11 ft (3.35)	16 ft (4.88)	22 ft (6.71)
Loaded lb (kg)	56 (25)	113 (51)	156 (71)	227 (103)	131 (142)
Spacer lb (kg)	47 (21)	94 (42)	130 (59)	189 (86)	259 (118)

3 3/8-in. 4-spf 180° SDP VannGun™ System

Item	Part No.	Description	Part No.
	Premium		Standard
	101237973	Shipping Assembly - 4ft	101234115
	101228578	Shipping Assembly - 8ft	101234116
	101228579	Shipping Assembly - 11ft	101234117
	27317	Shipping Assembly - 16ft	101234118
	100155885	Shipping Assembly - 22ft	101234119
*1	101237939	Gun, Scallop - 4ft	101233754
	101228580	Gun, Scallop - 8ft	101233752
	100156325	Gun, Scallop - 11ft	101233746
	101204543	Gun, Scallop - 16ft	101233737
	100156324	Gun, Scallop - 22ft	101233733

Item	Description	Part No.
*2	Tube, Charge Holder - 4ft	101234090
	Tube, Charge Holder - 8ft	101228581
	Tube, Charge Holder - 11ft	101228582
	Tube, Charge Holder - 16ft	101204561
	Tube, Charge Holder - 22ft	100156434
*3	Fixture, Alignment	100005248
*4	Screw, Set 0.25”-20 D x 0.63” L	100007783
*5	Charge Tube Cushion	100007998
*6	Screw, Hex Socket 0.25”-20 D x 0.50” L	100028225
7	O-Ring, Buna 90 Duro #334	100001963
	O-Ring, Viton 95 Duro #334	100009382
	O-Ring, Aflas 90 Duro #334	13416
	O-Ring, Backup #334	100005381
8	O-Ring, Buna 90 Duro #334	100001963
	O-Ring, Viton 95 Duro #334	100009382
	O-Ring, Aflas 90 Duro #334	13416
	O-Ring, Backup #334	100005381
9	Insert, Alignment (PAI)	100005255
	Instert, Alignment (AAI)	100005222
10	Tandem, Grooved	100005252
11	Tandem, Grooved	100005252
12	Crossover, Box x Pin	100005256
13	Bull Plug	100005258
14	Bi-Directional Booster	See Appendix A
15	Detonating Cord	See Appendix A
16	Charge - 24.0g RDX BH	100005321
	Charge - 24.0g HMX BH	100157017
	Charge - 22.0g RDX DP	100005333
	Charge - 26.0g HMX DP	100005332
	Charge - 26.0g PYX/BRX DP	100005331
17	Charge Clip	100156506
18	End Seal	100005251

*Included in Shipping Assembly.

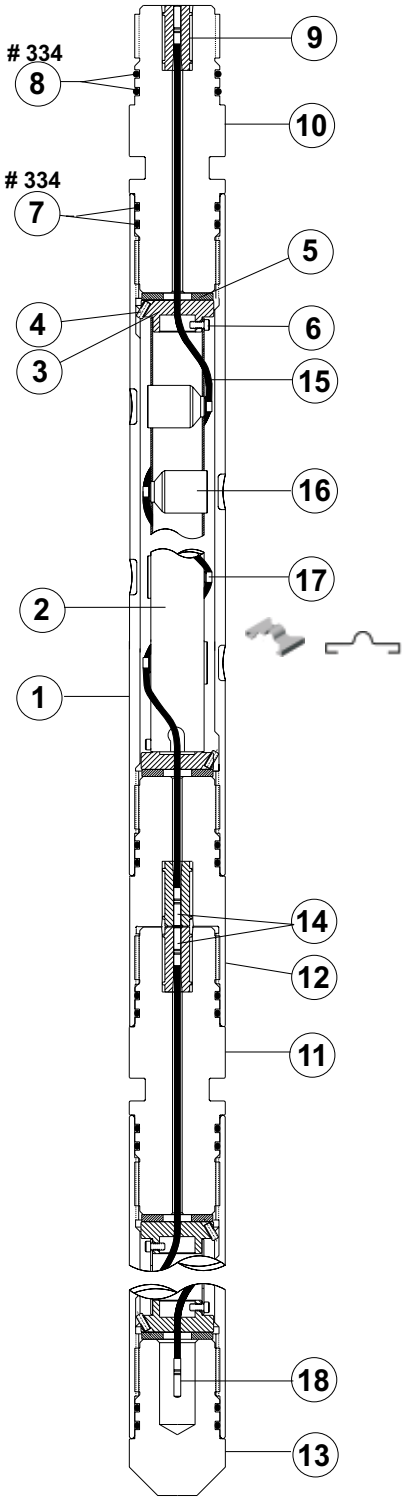

3 3/8-in. 4-spf 180° SDP VannGun™ System

3 $^{3}/_{8}$-in. 4-spf 180° SDP VannGun™ System

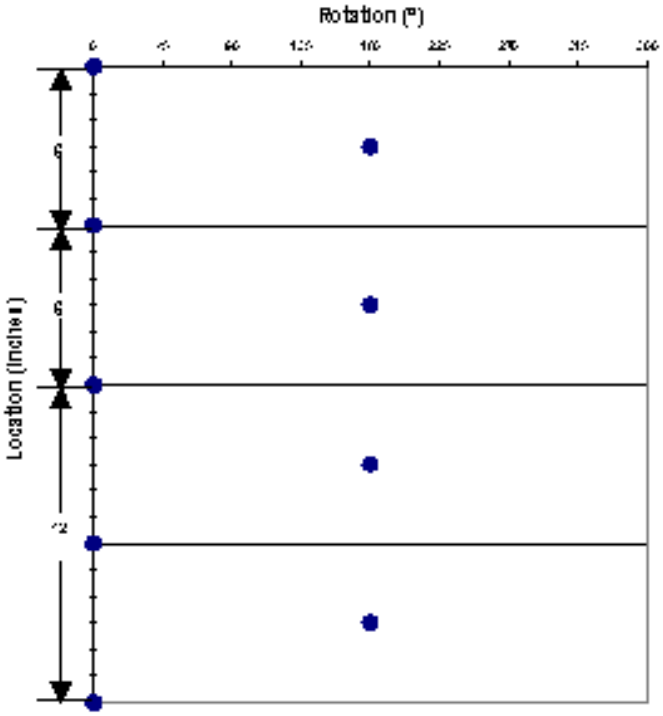

Shot Pattern for 3.375-in.
4-spf 180° Phasing

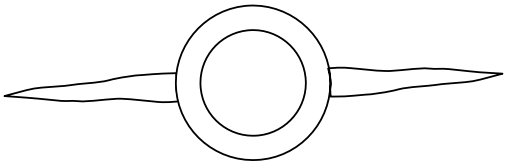

180° Phasing
2 Perforation Planes

VannGun™ Weights

Length ft (m)	4ft (1.22)	8 ft (2.44)	11 ft (3.35)	16 ft (4.88)	22 ft (6.71)
Loaded lb (kg)	56 (25)	113 (51)	156 (71)	227 (103)	131 (142)
Spacer lb (kg)	47 (21)	94 (42)	130 (59)	189 (86)	259 (118)

3 3/8-in. 5-spf 0° VannGun™ System

Item	Part No.	Description	Part No.
	Premium		Standard
	N/A	Shipping Assembly - 4 ft	101272509
		Shipping Assembly - 8 ft	101272511
		Shipping Assembly - 11 ft	101272515
		Shipping Assembly - 16 ft	101272517
		Shipping Assembly - 22 ft	101272518
*1	N/A	Gun, Scallop - 4 ft	101226687
		Gun, Scallop - 8 ft	101226688
		Gun, Scallop - 11 ft	101226689
		Gun, Scallop - 16 ft	101226691
		Gun, Scallop - 22 ft	101226693

Item	Description	Part No.
*2	Tube, Charge Holder - 4 ft	101272519
	Tube, Charge Holder - 8 ft	101272520
	Tube, Charge Holder - 11 ft	101272521
	Tube, Charge Holder - 16 ft	101272522
	Tube, Charge Holder - 22 ft	101272523
*3	Fixture, Alignment	100005248
*4	Screw, Set 0.25”-20 D x 0.63” L	100007783
*5	Charge Tube Cushion	100007998
*6	Screw, Hex Socket 0.25”-20 D x 0.50” L	100028225
7	O-Ring, Buna 90 Duro #334	100001963
	O-Ring, Viton 95 Duro #334	100009382
	O-Ring, Aflas 90 Duro #334	13416
	O-Ring, Backup #334	100005381
8	O-Ring, Buna 90 Duro #334	100001963
	O-Ring, Viton 95 Duro #334	100009382
	O-Ring, Aflas 90 Duro #334	13416
	O-Ring, Backup #334	100005381
9	Insert, Alignment (PAI)	100005255
	Insert, Alignment (AAI)	100005222
10	Tandem, Grooved	100005252
11	Tandem, Grooved	100005252
12	Crossover, Box x Pin	100005256
13	Bull Plug	100005258
14	Bi-Directional Booster	See Appendix A
15	Detonating Cord	See Appendix A
16	Charge - 24.0g RDX BH	100005321
	Charge - 24.0g HMX BH	100157017
	Charge - 22.0g RDX DP	100005333
	Charge - 26.0g HMX DP	100005332
	Charge - 26.0g PYX/BRX DP	100005331
17	Charge Clip	100156506
18	End Seal	100005251

*Included in Shipping Assembly.

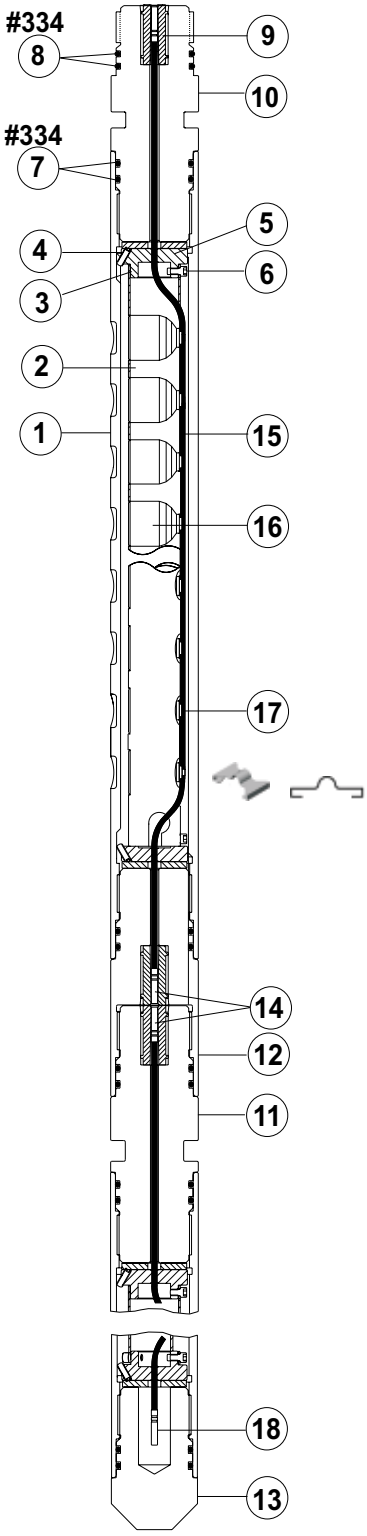

3 3/8-in. 5-spf 0° VannGun™ System

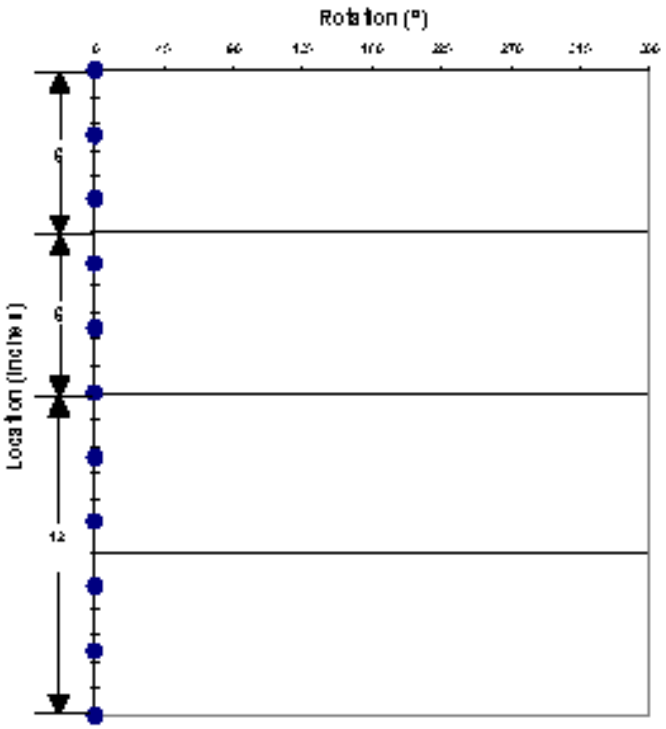

Shot Pattern for 3.375-in.
5-spf 0° Phasing

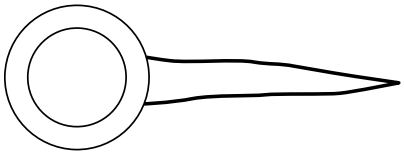

0° Phasing
1 Perforation Plane

VannGun™ Weights

Length ft (m)	4ft (1.22)	8 ft (2.44)	11 ft (3.35)	16 ft (4.88)	22 ft (6.71)
Loaded lb (kg)	55 (25)	112 (51)	155 (70)	226 (103)	312 (141)
Spacer lb (kg)	47 (21)	94 (43)	130 (59)	188 (85)	259 (118)

3 3/8-in. 5-spf 0° SDP VannGun™ System

Item	Part No.	Description	Part No.
	Premium		Standard
	101208169	Shipping Assembly - 4 ft	101226698
	101208170	Shipping Assembly - 8 ft	101226700
	101208171	Shipping Assembly - 11 ft	101226701
	101208172	Shipping Assembly - 16 ft	101226703
	101208173	Shipping Assembly - 22 ft	101226704
*1	101208118	Gun, Scallop - 4 ft	101226687
	101208121	Gun, Scallop - 8 ft	101226688
	101208122	Gun, Scallop - 11 ft	101226689
	101208123	Gun, Scallop - 16 ft	101226691
	101208124	Gun, Scallop - 22 ft	101226693

Item	Description	Part No.
*2	Tube, Charge Holder - 4 ft	101208126
	Tube, Charge Holder - 8 ft	101208127
	Tube, Charge Holder - 11 ft	101208128
	Tube, Charge Holder - 16 ft	101208130
	Tube, Charge Holder - 22 ft	101208131
*3	Fixture, Alignment SDP	100007999
*4	Screw, Set 0.25”-20 D x 0.63” L	100007783
*5	Charge Tube Cushion	100007998
*6	Screw, Hex Socket 0.25”-20 D x 0.50” L	100028225
7	O-Ring, Buna 90 Duro #334	100001963
	O-Ring, Viton 95 Duro #334	100009382
	O-Ring, Aflas 90 Duro #334	13416
	O-Ring, Backup #334	100005381
8	O-Ring, Buna 90 Duro #334	100001963
	O-Ring, Viton 95 Duro #334	100009382
	O-Ring, Aflas 90 Duro #334	13416
	O-Ring, Backup #334	100005381
9	Insert, Alignment (PAI)	100005255
	Insert, Alignment (AAI)	100005222
10	Tandem, Grooved	100005252
11	Tandem, Grooved	100005252
12	Crossover, Box x Pin	100005256
13	Bull Plug	100005258
14	Bi-Directional Booster	See Appendix A
15	Detonating Cord	See Appendix A
16	Charge - 24.0g RDX SDP	100008014
	Charge - 25.0g HMX SDP	100008249
	Charge - 25.0g HMX ***Millennium***™	101233819
	Charge - 24.2g PYX SDP	100008015
17	Charge Clip	100005336
18	End Seal	100005251

*Included in Shipping Assembly.

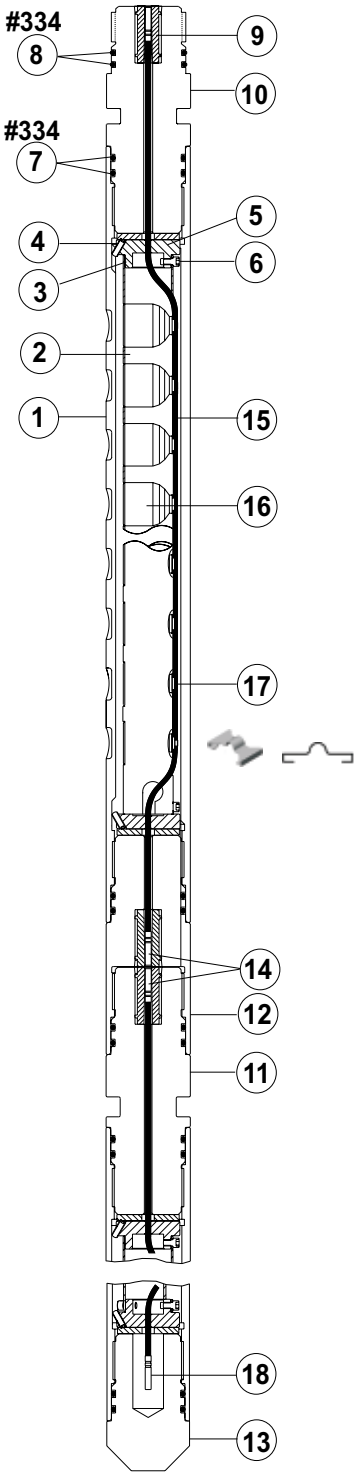

3 3/8-in. 5-spf 0°
SDP VannGun™ System

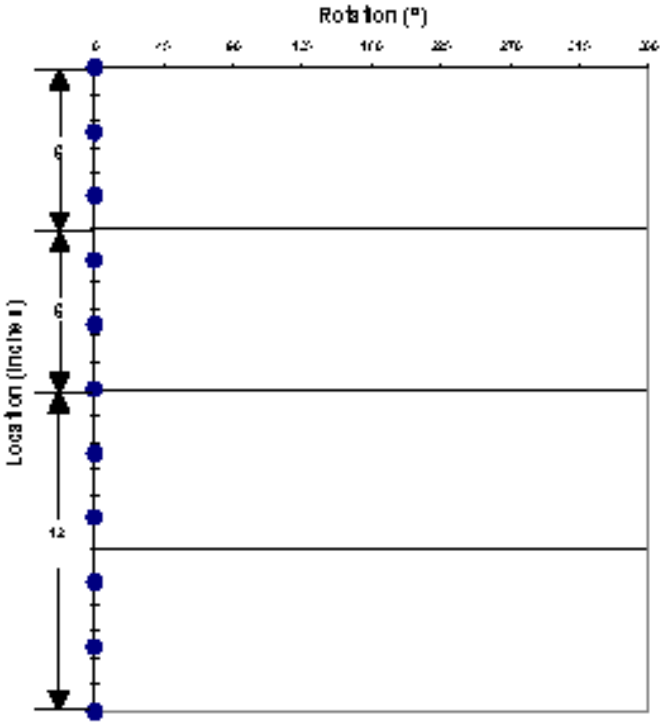

Shot Pattern for 3.375-in.
5-spf 0° Phasing

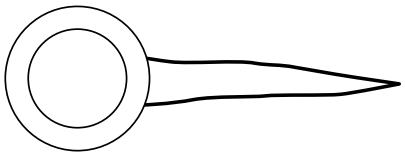

0° Phasing
1 Perforation Plane

VannGun™ Weights

Length ft (m)	4ft (1.22)	8 ft (2.44)	11 ft (3.35)	16 ft (4.88)	22 ft (6.71)
Loaded lb (kg)	55 (25)	112 (51)	155 (70)	226 (103)	312 (141)
Spacer lb (kg)	47 (21)	94 (43)	130 (59)	188 (85)	259 (118)

3 3/8-in. 6-spf 60° VannGun™ System

Item	Part No.	Description	Part No.
	Premium		Standard
	100005400	Shipping Assembly - 4 ft	100155829
	100007988	Shipping Assembly - 8 ft	100155830
	100005398	Shipping Assembly - 11 ft	100155831
	100005210	Shipping Assembly - 16 ft	100155832
	100007981	Shipping Assembly - 22 ft	100155833
*1	100014928	Gun, Scallop - 4 ft	100156379
	100005245	Gun, Scallop - 8 ft	100156387
	100014253	Gun, Scallop - 11 ft	100156380
	100005246	Gun, Scallop - 16 ft	100156388
	100007993	Gun, Scallop - 22 ft	100156381

Item	Description	Part No.
*2	Tube, Charge Holder - 4 ft	100156463
	Tube, Charge Holder - 8 ft	100156465
	Tube, Charge Holder - 11 ft	100156461
	Tube, Charge Holder - 16 ft	100005249
	Tube, Charge Holder - 22 ft	100156445
*3	Fixture, Alignment	100005248
*4	Screw, Set 0.25”-20 D x 0.63” L	100007783
*5	Charge Tube Cushion	100007998
*6	Screw, Hex Socket 0.25”-20 D x 0.50” L	100028225
7	O-Ring, Buna 90 Duro #334	100001963
	O-Ring, Viton 95 Duro #334	100009382
	O-Ring, Aflas 90 Duro #334	13416
	O-Ring, Backup #334	100005381
8	O-Ring, Buna 90 Duro #334	100001963
	O-Ring, Viton 95 Duro #334	100009382
	O-Ring, Aflas 90 Duro #334	13416
	O-Ring, Backup #334	100005381
9	Insert, Alignment (PAI)	100005255
	Insert, Alignment (AAI)	100005222
10	Tandem, Grooved	100005252
11	Tandem, Grooved	100005252
12	Crossover, Box x Pin	100005256
13	Bull Plug	100005258
14	Bi-Directional Booster	See Appendix A
15	Detonating Cord	See Appendix A
16	Charge - 24.0g RDX BH	100005321
	Charge - 24.0g HMX BH	100157017
	Charge - 22.0g RDX DP	100005333
	Charge - 26.0g HMX DP	100005332
	Charge - 26.0g PYX/BRX DP	100005331
17	Charge Clip	100156506
18	End Seal	100005251

*Included in Shipping Assembly.

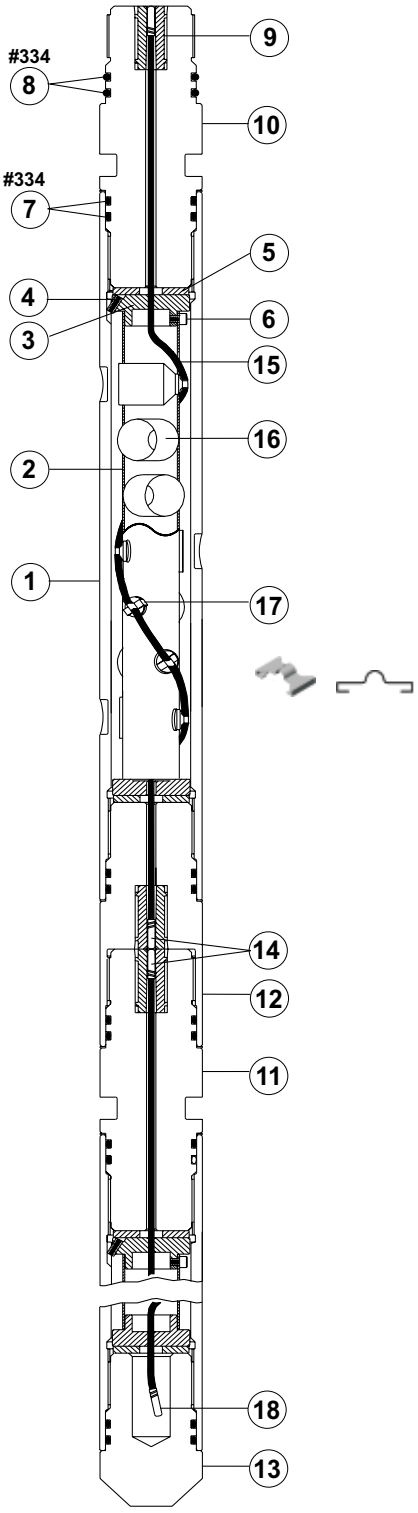

3 3/8-in. 6-spf 60° VannGun™ System

3 $^{3}/_{8}$-in. 6-spf 60° VannGun™ System

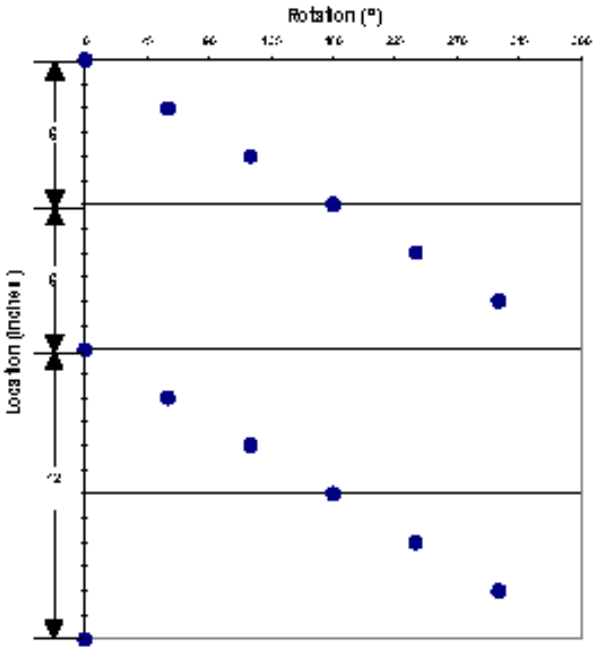

Shot Pattern for 3.375-in.
6-spf 60° Phasing

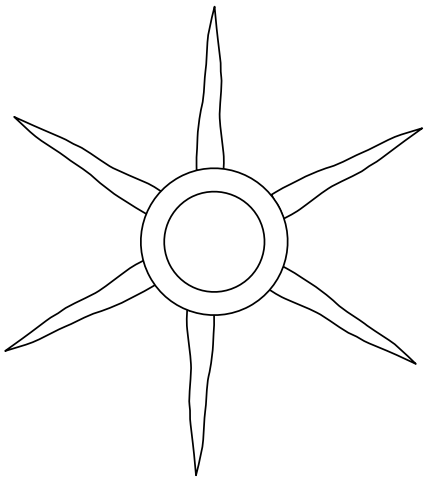

60° Phasing
6 Perforation Planes

VannGun™ Weights

Length ft (m)	4ft (1.22)	8 ft (2.44)	11 ft (3.35)	16 ft (4.88)	22 ft (6.71)
Loaded lb (kg)	62 (28)	127 (58)	176 (80)	258 (117)	355 (161)
Spacer lb (kg)	47 (21)	94 (43)	219 (59)	188 (85)	258 (117)

3 3/8-in. 6-spf 60° Lowside VannGun™ System

Item	Part No.	Description	Part No.
	Premium		Standard
	100009424	Shipping Assembly - 4 ft	101238326
	100155824	Shipping Assembly - 8 ft	101238330
	100155815	Shipping Assembly - 11 ft	101244863
	100007984	Shipping Assembly - 16 ft	101244694
	100005203	Shipping Assembly - 22 ft	101244865
*1	100156314	Gun, Scallop - 4 ft	101238324
	100156315	Gun, Scallop - 8 ft	120017833
	100156316	Gun, Scallop - 11 ft	120017899
	100156317	Gun, Scallop - 16 ft	120017890
	100156318	Gun, Scallop - 22 ft	101244864

Item	Description	Part No.
*2	Tube, Charge Holder - 4 ft	101238325
	Tube, Charge Holder - 8 ft	100156532
	Tube, Charge Holder - 11 ft	100156533
	Tube, Charge Holder - 16 ft	100156534
	Tube, Charge Holder - 22 ft	100156535
*3	Fixture, Alignment	100005248
*4	Screw, Set 0.25”-20 D x 0.63” L	100007783
*5	Charge Tube Cushion	100007998
*6	Screw, Hex Socket 0.25”-20 D x 0.50” L	100028225
7	O-Ring, Buna 90 Duro #334	100001963
	O-Ring, Viton 95 Duro #334	100009382
	O-Ring, Aflas 90 Duro #334	13416
	O-Ring, Backup #334	100005381
8	O-Ring, Buna 90 Duro #334	100001963
	O-Ring, Viton 95 Duro #334	100009382
	O-Ring, Aflas 90 Duro #334	13416
	O-Ring, Backup #334	100005381
9	Insert, Alignment (PAI)	100005255
	Insert, Alignment (AAI)	100005222
10	Tandem, Grooved	100005252
11	Tandem, Grooved	100005252
12	Crossover, Box x Pin	100005256
13	Bull Plug	100005258
14	Bi-Directional Booster	See Appendix A
15	Detonating Cord	See Appendix A
16	Charge - 24.0g RDX BH	100005321
	Charge - 24.0g HMX BH	100157017
	Charge - 22.0g RDX DP	100005333
	Charge - 26.0g HMX DP	100005332
	Charge - 26.0g PYX/BRX DP	100005331
17	Charge Clip	100156506
18	End Seal	100005251
19	Charge Tube Centralizer	100156265

*Included in Shipping Assembly.

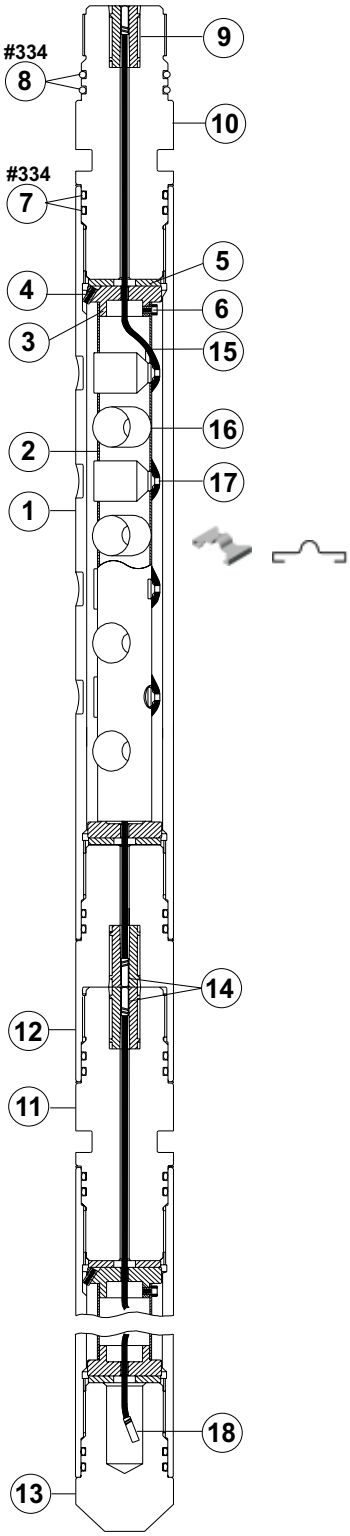

3 3/8-in. 6-spf 60° Lowside VannGun™ System

3 $^{3}/_{8}$-in. 6-spf 60° Lowside VannGun™ System

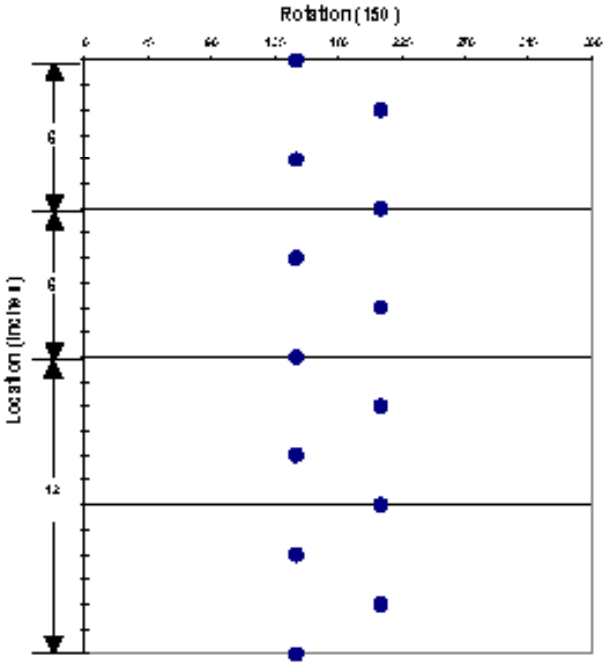

Shot Pattern for 3.375-in.
6-spf 60° Phasing

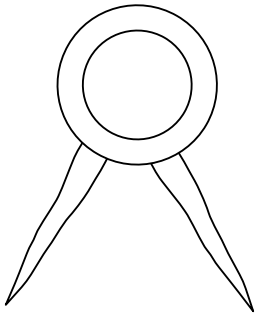

60° Phasing
2 Perforation Planes Lowside

VannGun™ Weights

Length ft (m)	4ft (1.22)	8 ft (2.44)	11 ft (3.35)	16 ft (4.88)	22 ft (6.71)
Loaded lb (kg)	62 (28)	127 (58)	176 (80)	258 (117)	355 (161)
Spacer lb (kg)	47 (21)	94 (43)	219 (59)	188 (85)	258 (117)

3 3/8-in. 6-spf 60° SDP VannGun™ System

Item	Part No.	Description	Part No.
	Premium		Standard
	100014192	Shipping Assembly - 4 ft	101244286
	100009803	Shipping Assembly - 8 ft	100155848
	100014194	Shipping Assembly - 11 ft	100155849
	100007991	Shipping Assembly - 16 ft	100155850
	100009447	Shipping Assembly - 22 ft	100155851
*1	100014928	Gun, Scallop - 4 ft	100156379
	100005245	Gun, Scallop - 8 ft	100156387
	100014253	Gun, Scallop - 11 ft	100156380
	100005246	Gun, Scallop - 16 ft	100156388
	100007993	Gun, Scallop - 22 ft	100156381

Item	Description	Part No.
*2	Tube, Charge Holder - 4 ft	100156496
	Tube, Charge Holder - 8 ft	100156498
	Tube, Charge Holder - 11 ft	100014270
	Tube, Charge Holder - 16 ft	100156499
	Tube, Charge Holder - 22 ft	100008000
*3	Fixture, Alignment SDP	100007999
*4	Screw, Set 0.25”-20 D x 0.63” L	100007783
*5	Charge Tube Cushion	100007998
*6	Screw, Hex Socket 0.25”-20 D x 0.50” L	100028225
7	O-Ring, Buna 90 Duro #334	100001963
	O-Ring, Viton 95 Duro #334	100009382
	O-Ring, Aflas 90 Duro #334	13416
	O-Ring, Backup #334	100005381
8	O-Ring, Buna 90 Duro #334	100001963
	O-Ring, Viton 95 Duro #334	100009382
	O-Ring, Aflas 90 Duro #334	13416
	O-Ring, Backup #334	100005381
9	Insert, Alignment (PAI)	100005255
	Insert, Alignment (AAI)	100005222
10	Tandem, Grooved	100005252
11	Tandem, Grooved	100005252
12	Crossover, Box x Pin	100005256
13	Bull Plug	100005258
14	Bi-Directional Booster	See Appendix A
15	Detonating Cord	See Appendix A
16	Charge - 24.0g RDX SDP	100008014
	Charge - 25.0g HMX DP	100008249
	Charge - 25.0g HMX ***Millennium***™	101233819
	Charge - 25.0g HNS ***Millennium***™	101365876
	Charge - 24.2g PYX SDP	100008015
	Charge - 24.0g RDX SDP/LD	101293450
17	Charge Clip	100005336
18	End Seal	100005251

*Included in Shipping Assembly.

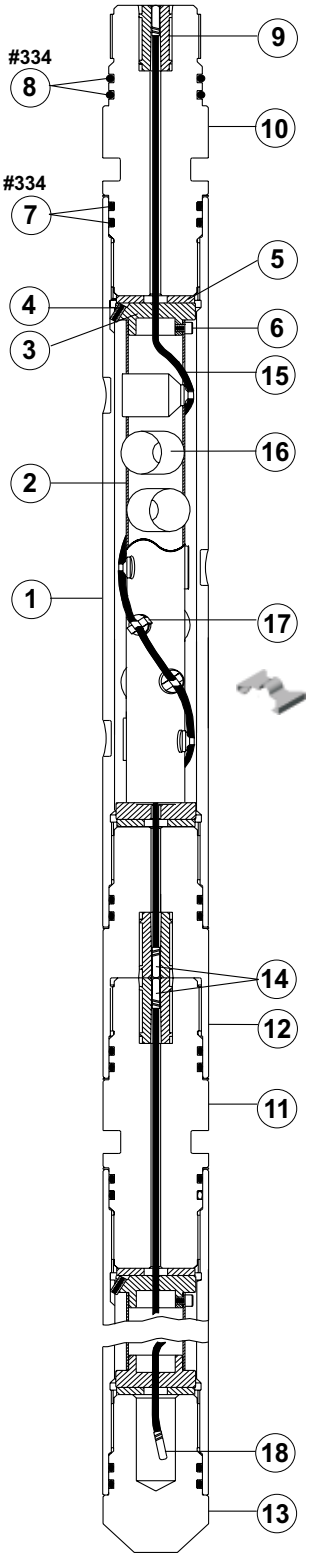

3 3/8-in. 6-spf 60° SDP VannGun™ System

3 $^{3}/_{8}$-in. 6-spf 60° SDP VannGun™ System

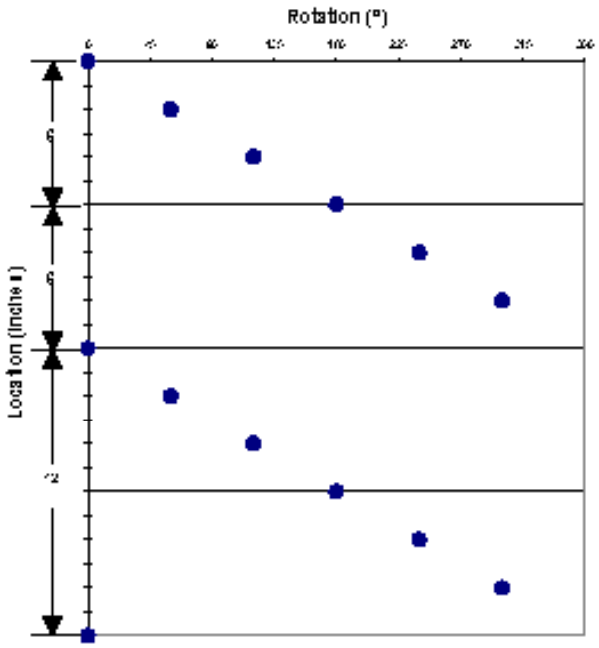

Shot Pattern for 3.375-in.
6-spf 60° Phasing

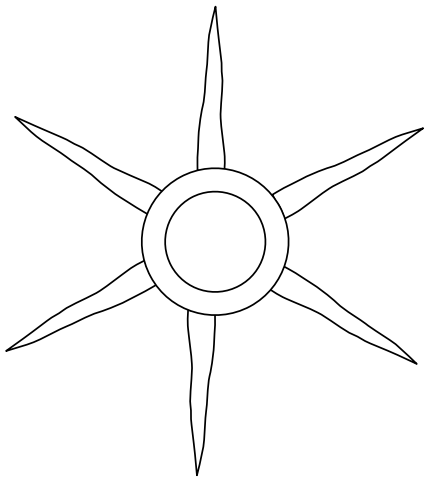

60° Phasing
6 Perforation Planes

VannGun™ Weights

Length ft (m)	4ft (1.22)	8 ft (2.44)	11 ft (3.35)	16 ft (4.88)	22 ft (6.71)
Loaded lb (kg)	62 (28)	127 (58)	176 (80)	258 (117)	355 (161)
Spacer lb (kg)	47 (21)	94 (43)	219 (59)	188 (85)	258 (117)

3 3/8-in. 8-spf 180° VannGun™ System

Item	Part No.	Description	Part No.
	Premium		Standard
	101237928	Shipping Assembly - 4 ft	101234085
	101237935	Shipping Assembly - 8 ft	101234086
	100155846	Shipping Assembly - 11 ft	101234087
	101237938	Shipping Assembly - 16 ft	101234088
	100155847	Shipping Assembly - 22 ft	101234352
*1	101237927	Gun, Scallop - 4 ft	101234071
	101237934	Gun, Scallop - 8 ft	101234074
	100156365	Gun, Scallop - 11 ft	101234075
	101237936	Gun, Scallop - 16 ft	101234080
	100156366	Gun, Scallop - 22 ft	101234081

Item	Description	Part No.
*2	Tube, Charge Holder - 4 ft	101236419
	Tube, Charge Holder - 8 ft	101236405
	Tube, Charge Holder - 11 ft	100156508
	Tube, Charge Holder - 16 ft	101236424
	Tube, Charge Holder - 22 ft	100156509
*3	Fixture, Alignment SH	100007999
*4	Screw, Set 0.25”-20 D x 0.63” L	100007783
*5	Charge Tube Cushion	100007998
*6	Screw, Hex Socket 0.25”-20 D x 0.50” L	100028225
7	O-Ring, Buna 90 Duro #334	100001963
	O-Ring, Viton 95 Duro #334	100009382
	O-Ring, Aflas 90 Duro #334	13416
	O-Ring, Backup #334	100005381
8	O-Ring, Buna 90 Duro #334	100001963
	O-Ring, Viton 95 Duro #334	100009382
	O-Ring, Aflas 90 Duro #334	13416
	O-Ring, Backup #334	100005381
9	Insert, Alignment (PAI)	100005255
	Insert, Alignment (AAI)	100005222
10	Tandem, Grooved	100005252
11	Tandem, Grooved	100005252
12	Crossover, Box x Pin	100005256
13	Bull Plug	100005258
14	Bi-Directional Booster	See Appendix A
15	Detonating Cord	See Appendix A
16	Charge - 14.0g RDX BH	100008251
	Charge - 14.0g HMX BH	100005312
17	Charge Clip	100157866
18	End Seal	100005251

*Included in Shipping Assembly.

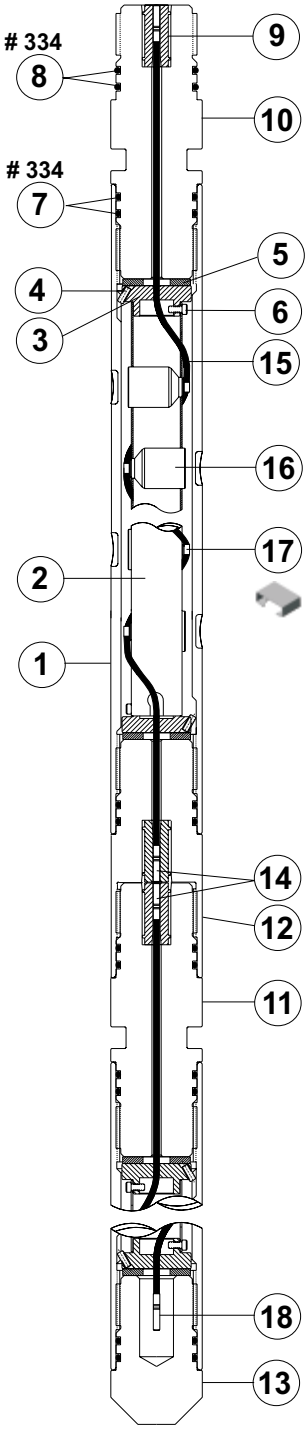

3 3/8-in. 8-spf 180° VannGun™ System

3 $^{3}/_{8}$-in. 8-spf 180° VannGun™ System

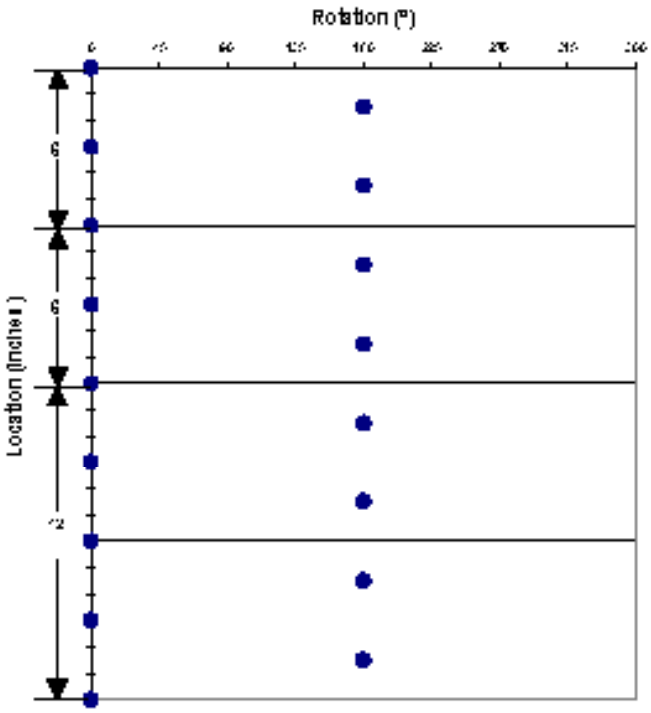

Shot Pattern for 3.375-in.
8-spf 180° Phasing

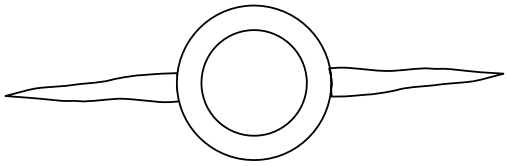

180° Phasing
2 Perforation Planes

VannGun™ Weights

Length ft (m)	4ft (1.22)	8 ft (2.44)	11 ft (3.35)	16 ft (4.88)	22 ft (6.71)
Loaded lb (kg)	56 (25)	113 (51)	155 (71)	226 (103)	312 (142)
Spacer lb (kg)	47 (21)	94 (43)	129 (59)	188 (85)	159 (117)

3 3/8-in. 12-spf OMNI™ VannGun™ System

Item	Part No.	Description	Part No.
	Premium		Standard
	100009425	Shipping Assembly - 4 ft	101232368
	100014189	Shipping Assembly - 8 ft	101232369
	100005212	Shipping Assembly - 11 ft	101232370
	100155839	Shipping Assembly - 16 ft	101232372
	100155838	Shipping Assembly - 22 ft	101232373
*1	100156307	Gun, Scallop - 4 ft	101232394
	100156312	Gun, Scallop - 8 ft	101232396
	100156309	Gun, Scallop - 11 ft	101232398
	100156313	Gun, Scallop - 16 ft	101232399
	100156311	Gun, Scallop - 22 ft	101232400

Item	Description	Part No.
*2	Tube, Charge Holder - 4 ft	100156485
	Tube, Charge Holder - 8 ft	100156490
	Tube, Charge Holder - 11 ft	100156487
	Tube, Charge Holder - 16 ft	100156491
	Tube, Charge Holder - 22 ft	100156489
*3	Fixture, Alignment SH	100007999
*4	Screw, Set 0.25”-20 D x 0.63” L	100007783
*5	Charge Tube Cushion	100007998
*6	Screw, Hex Socket 0.25”-20 D x 0.50” L	100028225
7	O-Ring, Buna 90 Duro #334	100001963
	O-Ring, Viton 95 Duro #334	100009382
	O-Ring, Aflas 90 Duro #334	13416
	O-Ring, Backup #334	100005381
8	O-Ring, Buna 90 Duro #334	100001963
	O-Ring, Viton 95 Duro #334	100009382
	O-Ring, Aflas 90 Duro #334	13416
	O-Ring, Backup #334	100005381
9	Insert, Alignment (PAI)	100005255
	Insert, Alignment (AAI)	100005222
10	Tandem, Grooved	100005252
11	Tandem, Grooved	100005252
12	Crossover, Box x Pin	100005256
13	Bull Plug	100005258
14	Bi-Directional Booster	See Appendix A
15	Detonating Cord	See Appendix A
16	Charge - 14.0g RDX BH	100008251
	Charge - 14.0g HMX BH	100005312
17	Charge Clip	100157866
18	End Seal	100005251

*Included in Shipping Assembly.

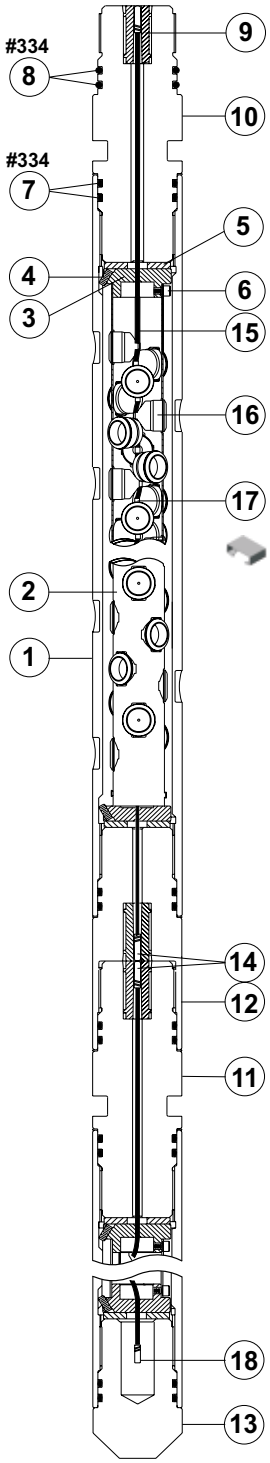

3 3/8-in. 12-spf OMNI™ VannGun™ System

3 $^{3}/_{8}$-in. 12-spf OMNI™ VannGun™ System

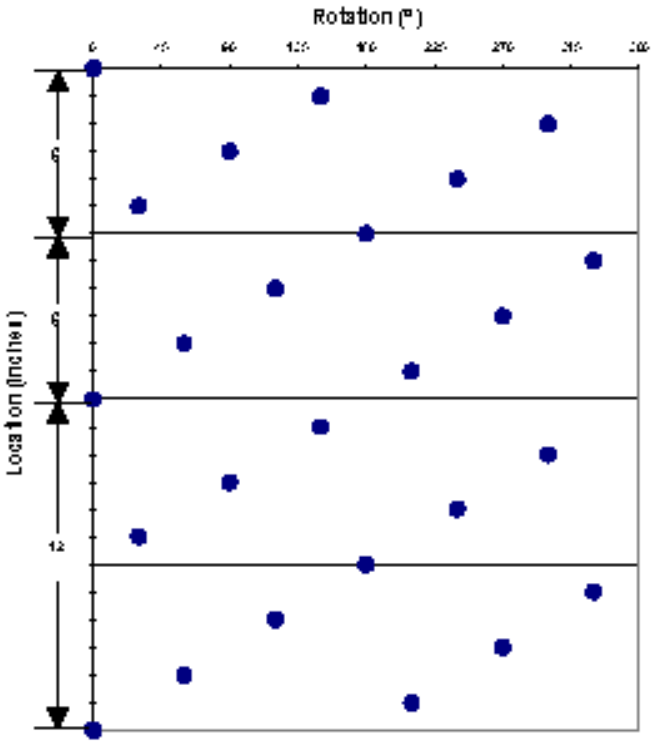

Shot Pattern for 3.375-in.
12-spf 30/150 Phasing

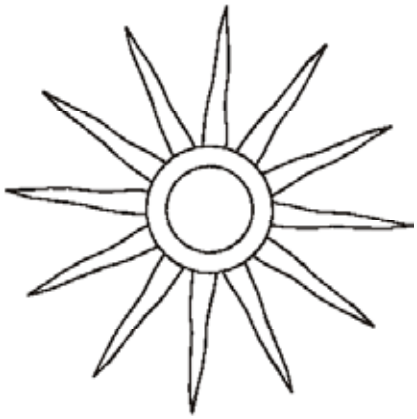

30°/150° Phasing
12 Perforation Planes

VannGun™ Weights

Length ft (m)	4ft (1.22)	8 ft (2.44)	11 ft (3.35)	16 ft (4.88)	22 ft (6.71)
Loaded lb (kg)	58 (26)	119 (54)	164 (74)	240 (109)	330 (150)
Spacer lb (kg)	47 (21)	94 (43)	129 (59)	188 (85)	259 (117)

4-in. 4-spf 60° VannGun™ System

Item	Part No.	Description	Part No.
	Premium		Standard
	101236870	Shipping Assembly - 4 ft	N/A
	101237961	Shipping Assembly - 8 ft	
	101237963	Shipping Assembly - 11 ft	
	101237965	Shipping Assembly - 16 ft	
	101237972	Shipping Assembly - 22 ft	
*1	101236869	Gun, Scallop - 4 ft	N/A
	101237960	Gun, Scallop - 8 ft	
	101237962	Gun, Scallop - 11 ft	
	101237964	Gun, Scallop - 16 ft	
	101237971	Gun, Scallop - 22 ft	

Item	Description	Part No.
*2	Tube, Charge Holder - 4 ft	101204258
	Tube, Charge Holder - 8 ft	101204264
	Tube, Charge Holder - 11 ft	101204265
	Tube, Charge Holder - 16 ft	100156542
	Tube, Charge Holder - 22 ft	101204273
*3	Fixture, Alignment	100156398
*4	Screw, Set 0.25”-20 D x 0.75” L	100028806
*5	Charge Tube Cushion	100156399
*6	Screw, Hex Socket 0.25”-20 D x 0.50” L	100028225
7	O-Ring, Buna 90 Duro #237	100002008
	O-Ring, Viton 95 Duro #237	100064882
	O-Ring, Aflas 90 Duro #237	101282585
	O-Ring, Backup #237	101282854
8	O-Ring, Buna 90 Duro #334	100001963
	O-Ring, Viton 95 Duro #334	100009382
	O-Ring, Aflas 90 Duro #334	13416
	O-Ring, Backup #334	100005381
9	Insert, Alignment (PAI)	100005255
	Insert, Alignment (AAI)	100005222
10	Crossover, Firing Head	100008007
11	Tandem, Grooved	100005274
12	Crossover, Box x Pin	100005275
13	Bull Plug	100008006
14	Bi-Directional Booster	See Appendix A
15	Detonating Cord	See Appendix A
16	Charge - 32.0g RDX DP	100005322
	Charge - 32.2g PYX/BRX DP	100005323
	Charge - 32.0g HMX DP	100005327
	Charge - 24.2g PYX SDP	100008015
	Charge - 24.0g RDX SDP	100008014
	Charge - 25.0g HMX SDP	100008249
	Charge - 24.0g RDX SDP/LD	101293450
17	Charge Clip	100005336
18	End Seal	100005251

*Included in Shipping Assembly.

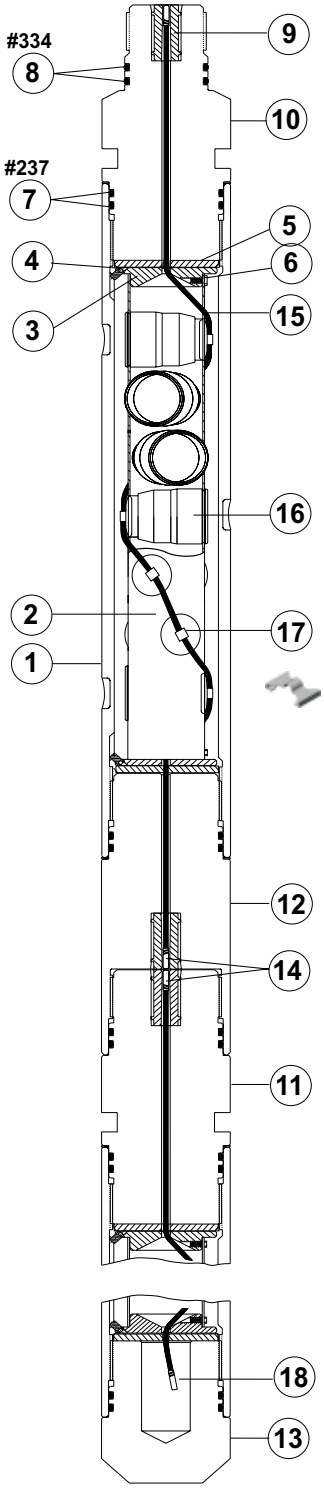

4-in. 4-spf 60° VannGun™ System

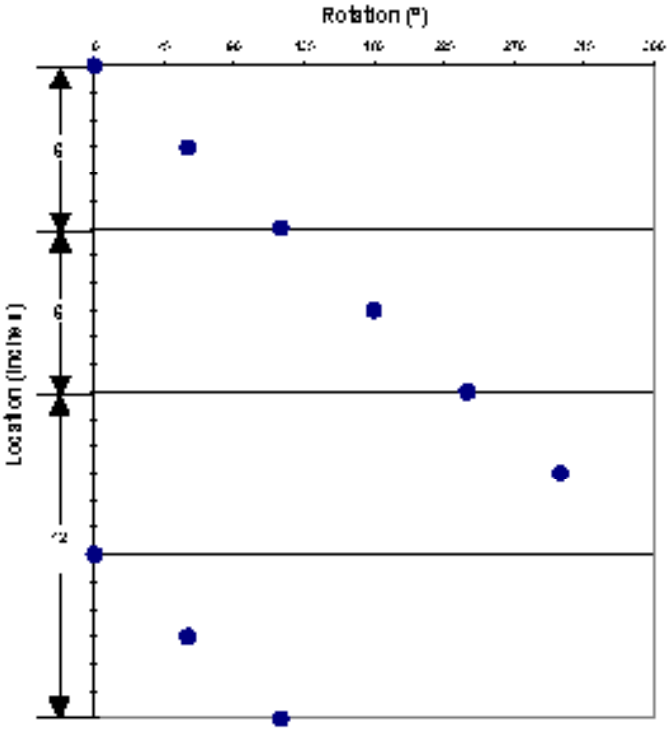

Shot Pattern for 4-in.
4-spf 60° Phasing

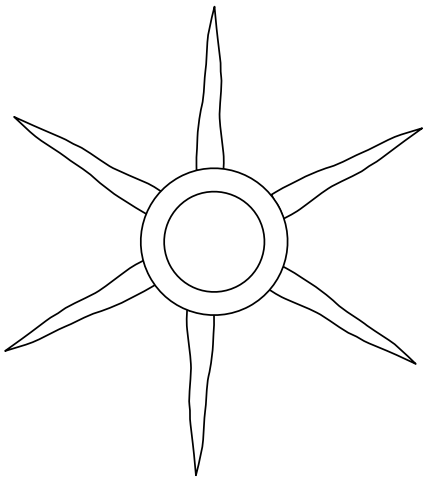

60° Phasing
6 Perforation Planes

VannGun™ Weights

Length ft (m)	4ft (1.22)	8 ft (2.44)	11 ft (3.35)	16 ft (4.88)	22 ft (6.71)
Loaded lb (kg)	67 (30)	136 (62)	187 (85)	274 (124)	377 (171)
Spacer lb (kg)	56 (25)	112 (51)	154 (70)	224 (102)	308 (146)

4-in. 4-spf 90° VannGun™ System

Item	Part No.	Description	Part No.
	Premium		Standard
	100014198	Shipping Assembly - 4 ft	N/A
	100014199	Shipping Assembly - 8 ft	
	100014200	Shipping Assembly - 11 ft	
	100014201	Shipping Assembly - 16 ft	
	100014202	Shipping Assembly - 22 ft	
*1	100156355	Gun, Scallop - 4 ft	N/A
	100156356	Gun, Scallop - 8 ft	
	100156357	Gun, Scallop - 11 ft	
	100156358	Gun, Scallop - 16 ft	
	100156359	Gun, Scallop - 22 ft	

Item	Description	Part No.
*2	Tube, Charge Holder - 4ft	100156449
	Tube, Charge Holder - 8ft	100156477
	Tube, Charge Holder - 11ft	100156450
	Tube, Charge Holder - 16ft	100156478
	Tube, Charge Holder - 22ft	100156451
*3	Fixture, Alignment	100156398
*4	Screw, Set 0.25”-20 D x 0.75” L	100028806
*5	Charge Tube Cushion	100156399
*6	Screw, Hex Socket 0.25”-20 D x 0.50” L	100028225
7	O-Ring, Buna 90 Duro #237	100002008
	O-Ring, Viton 95 Duro #237	100064882
	O-Ring, Aflas 90 Duro #237	101282585
	O-Ring, Backup #237	101282854
8	O-Ring, Buna 90 Duro #334	100001963
	O-Ring, Viton 95 Duro #334	100009382
	O-Ring, Aflas 90 Duro #334	13416
	O-Ring, Backup #334	100005381
9	Insert, Alignment (PAI)	100005255
	Insert, Alignment (AAI)	100005222
10	Crossover, Firing Head	100008007
11	Tandem, Grooved	100005274
12	Crossover, Box x Pin	100005275
13	Bull Plug	100008006
14	Bi-Directional Booster	See Appendix A
15	Detonating Cord	See Appendix A
16	Charge - 32.0g RDX DP	100005322
	Charge - 32.0g HMX DP	100005327
	Charge - 32.2g PYX/BRX DP	100005323
	Charge - 24.0g RDX SDP	100008014
	Charge - 25.0g HMX SDP	100008249
	Charge - 24.2g PYX SDP	100008015
	Charge - 25.0g HMX ***Millennium***™	101233819
	Charge - 24.0g RDX SDP/LD	101293450
17	Charge Clip	100005336
18	End Seal	100005251

*Included in Shipping Assembly.

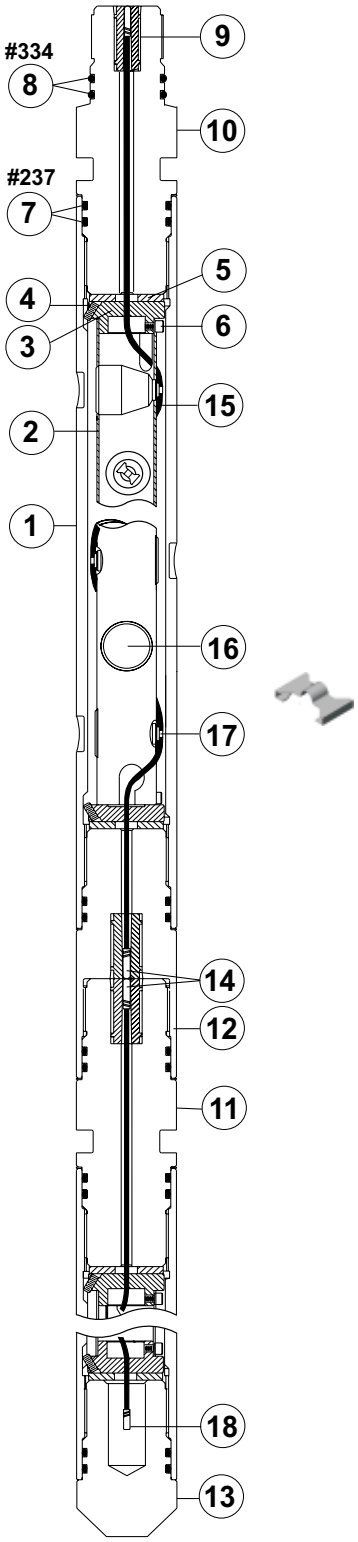

4-in. 4-spf 90° VannGun™ System

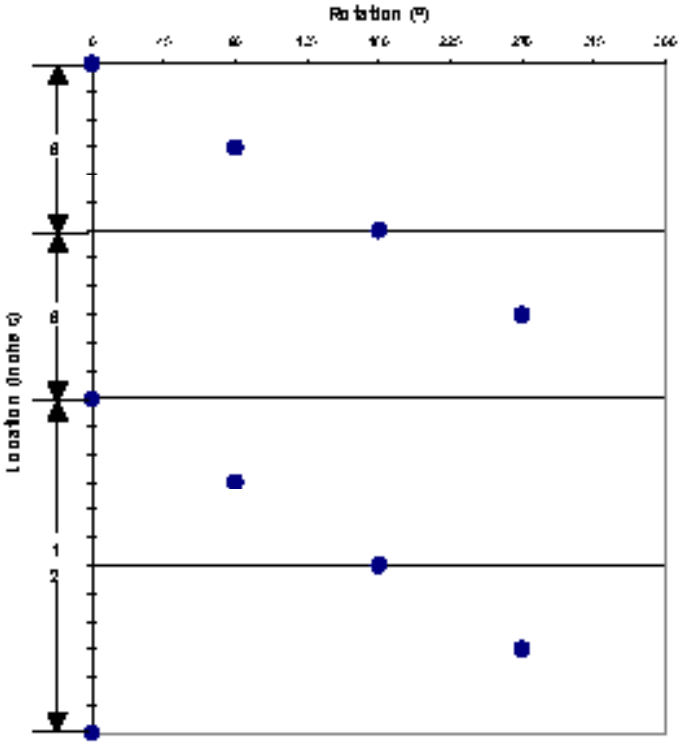

Shot Pattern for 4-in.
4-spf 90° Phasing

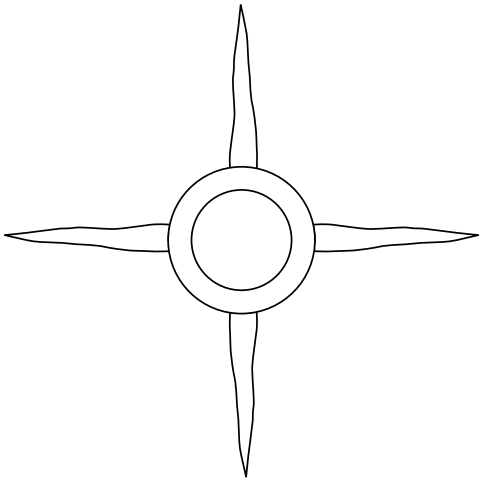

90° Phasing
4 Perforation Planes

VannGun™ Weights

Length ft (m)	4ft (1.22)	8 ft (2.44)	11 ft (3.35)	16 ft (4.88)	22 ft (6.71)
Loaded lb (kg)	67 (30)	136 (62)	187 (85)	274 (124)	377 (171)
Spacer lb (kg)	56 (25)	112 (51)	154 (70)	224 (102)	308 (146)

4 5/8-in. 12-spf OMNI™ VannGun™ System

Item	Part No.	Description	Part No.
	Premium		Standard
	100005403	Shipping Assembly - 4 ft	100155825
	100005404	Shipping Assembly - 8 ft	100155826
	100005195	Shipping Assembly - 11 ft	100155834
	100005405	Shipping Assembly - 16 ft	100155827
	100005196	Shipping Assembly - 22 ft	100155828
*1	100156338	Gun, Scallop - 4 ft	100156376
	100156339	Gun, Scallop - 8 ft	100156382
	100014254	Gun, Scallop - 11 ft	100156378
	100014255	Gun, Scallop - 16 ft	100156377
	100156355	Gun, Scallop - 22 ft	100156375

Item	Description	Part No.
*2	Tube, Charge Holder - 4 ft	100156511
	Tube, Charge Holder - 8 ft	100156512
	Tube, Charge Holder - 11 ft	100156558
	Tube, Charge Holder - 16 ft	100156513
	Tube, Charge Holder - 22 ft	100156559
*3	Fixture, Alignment	100156519
*4	Screw, Set 0.25”-20 D x 0.75” L	100028806
*5	Charge Tube Cushion	100156401
*6	Screw, Hex Socket 0.25”-20 D x 0.63” L	100028226
7	O-Ring, Buna 90 Duro #343	100001972
	O-Ring, Viton 95 Duro #343	100009383
	O-Ring, Aflas 90 Duro #343	100157505
	O-Ring, Backup #343	100014417
8	O-Ring, Buna 90 Duro #334	100001963
	O-Ring, Viton 95 Duro #334	100009382
	O-Ring, Aflas 90 Duro #334	13416
	O-Ring, Backup #334	100005381
9	Insert, Alignment (PAI)	100005255
	Insert, Alignment (AAI)	100005222
10	Crossover, Firing Head	100005264
11	Tandem, Grooved	100005263
12	Crossover, Box x Pin	100005265
13	Bull Plug	100005266
14	Bi-Directional Booster	See Appendix A
15	Detonating Cord	See Appendix A
16	Charge - 22.7g RDX DP	100005324
	Charge - 22.7g RDX DP/LD	100005325
	Charge - 25.0g RDX BH	100005319
	Charge - 22.7g RDX BH/LD	100005326
	Charge - 22.7g HMX ***Millennium***™	101210674
	Charge - 22.7g HMX DP	100014352
	Charge - 22.7g HMX DP/LD	100005340
	Charge - 25g HMX BH	100157006
	Charge - 22.7g HMX BH/LD	AR
	Charge - 26.0 PYX DP	AR
17	Charge Clip	100005250
18	End Seal	100005251

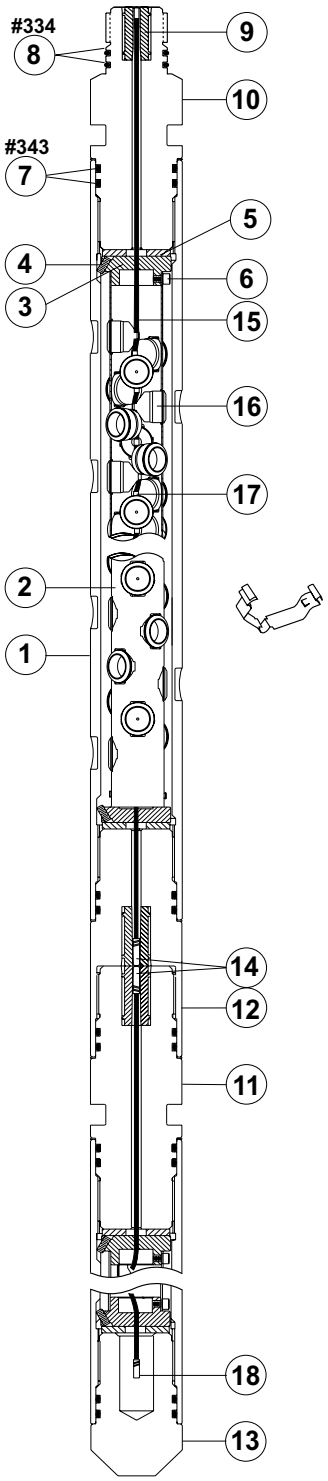

4 5/8-in. 12-spf
OMNI™ VannGun™ System

* Included in Shipping Assembly.
AR Available Upon Request.

4 $^{5}/_{8}$-in. 12-spf OMNI™ VannGun™ System

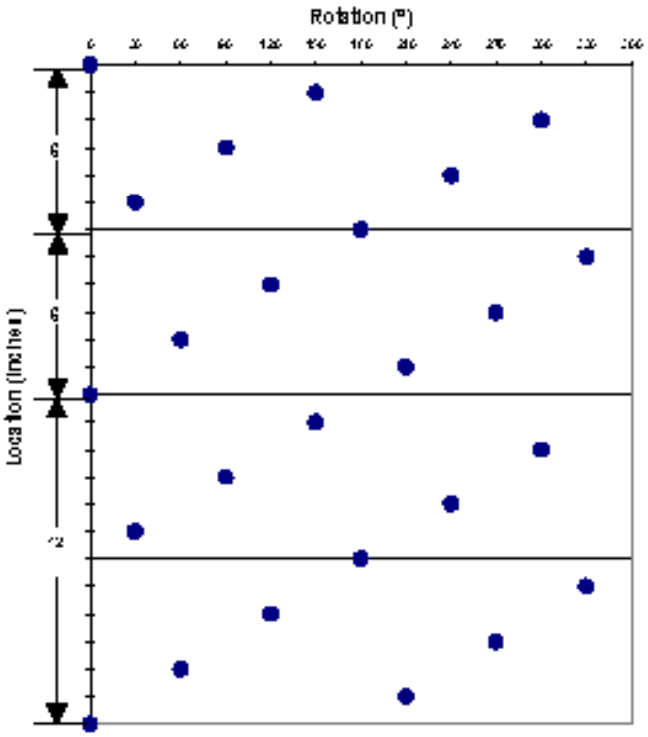

Shot Pattern for 4.625-in.
12-spf 30°/150° Phasing

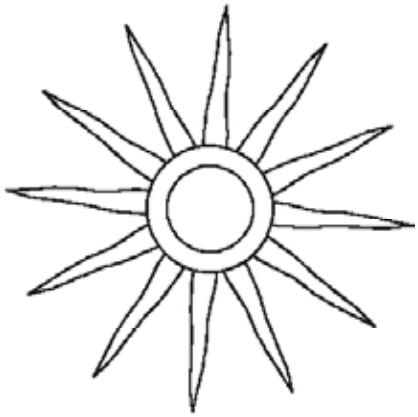

30°/150° Phasing
12 Perforation Planes

VannGun™ Weights

Length ft (m)	4ft (1.22)	8 ft (2.44)	11 ft (3.35)	16 ft (4.88)	22 ft (6.71)
Loaded lb (kg)	83 (38)	169 (77)	234 (106)	341 (155)	470 (213)
Spacer lb (kg)	71 (32)	142 (64)	195 (88)	283 (128)	389 (177)

4 5/8-in. 12-spf OMNI™ SH VannGun™ System

Item	Part No.	Description	Part No.
	Premium		Standard
	100155836	Shipping Assembly - 4 ft	101272845
	100005209	Shipping Assembly - 8 ft	101272846
	100163695	Shipping Assembly - 11 ft	100155867
	100155837	Shipping Assembly - 16 ft	100155868
	100010359	Shipping Assembly - 22 ft	100155869
*1	100156338	Gun, Scallop - 4 ft	100156376
	100156339	Gun, Scallop - 8 ft	100156382
	100014254	Gun, Scallop - 11 ft	100156378
	100014255	Gun, Scallop - 16 ft	100156377
	100156335	Gun, Scallop - 22 ft	100156375

Item	Description	Part No.
*2	Tube, Charge Holder - 4 ft	100156514
	Tube, Charge Holder - 8 ft	100156515
	Tube, Charge Holder - 11 ft	100156518
	Tube, Charge Holder - 16 ft	100156516
	Tube, Charge Holder - 22 ft	100156517
*3	Fixture, Alignment	100156519
*4	Screw, Set 0.25”-20 D x 0.75” L	100028806
*5	Charge Tube Cushion	100156401
*6	Screw, Hex Socket 0.25”-20 D x 0.63” L	100028226
7	O-Ring, Buna 90 Duro #343	100001972
	O-Ring, Viton 95 Duro #343	100009383
	O-Ring, Aflas 90 Duro #343	100157505
	O-Ring, Backup #343	100014417
8	O-Ring, Buna 90 Duro #334	100001963
	O-Ring, Viton 95 Duro #334	100009382
	O-Ring, Aflas 90 Duro #334	13416
	O-Ring, Backup #334	100005381
9	Insert, Alignment (PAI)	100005255
	Insert, Alignment (AAI)	100005222
10	Crossover, Firing Head	100005264
11	Tandem, Grooved	100005263
12	Crossover, Box x Pin	100005265
13	Bull Plug	100005266
14	Bi-Directional Booster	See Appendix A
15	Detonating Cord	See Appendix A
16	Charge - 28.0g RDX SH	100005311
	Charge - 28.0g RDX SH/LD	101228756
	Charge - 28.0g HMX SH	100156995
	Charge - 28.0g HMX SH/LD	101233690
17	Charge Clip	100157866
18	End Seal	100005251

* Included in Shipping Assembly.

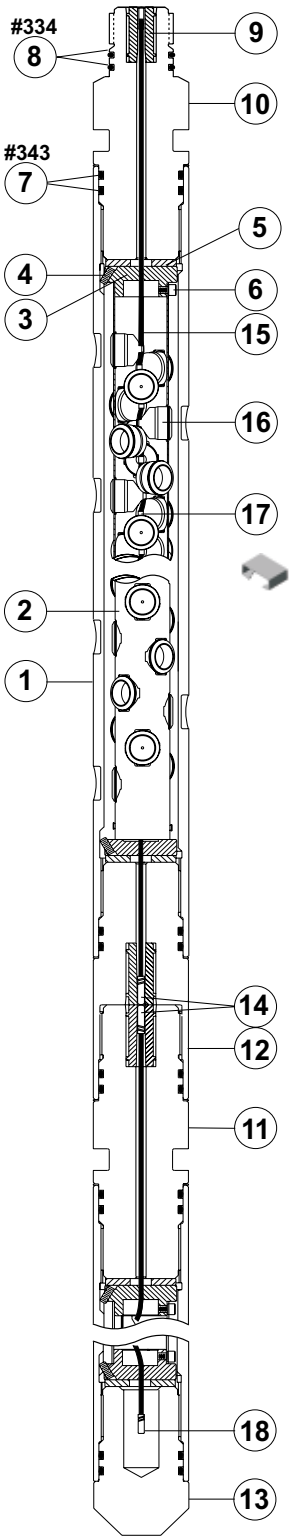

4 5/8-in. 12-spf OMNI™ SH VannGun™ System

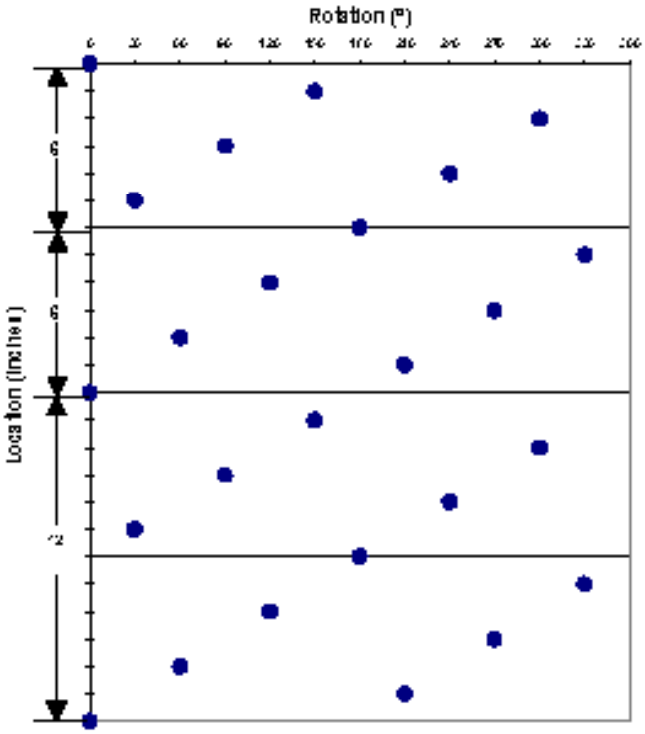

Shot Pattern for 4.625-in.
12-spf 30°/150° Phasing

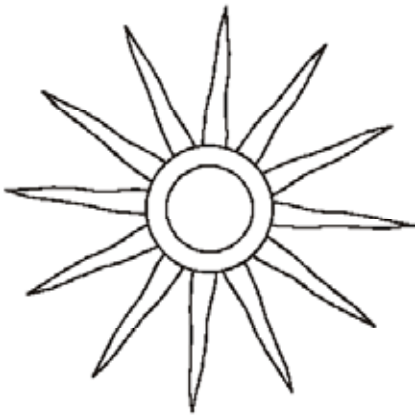

30°/150° Phasing
12 Perforation Planes

VannGun™ Weights

Length ft (m)	4ft (1.22)	8 ft (2.44)	11 ft (3.35)	16 ft (4.88)	22 ft (6.71)
Loaded lb (kg)	83 (38)	169 (77)	234 (106)	341 (155)	470 (213)
Spacer lb (kg)	71 (32)	142 (64)	195 (88)	283 (128)	389 (177)

4 5/8-in. 14-spf 25.7°/128.5° SH VannGun™ System

Item	Part No.	Description	Part No.
	Premium		Standard
	101201455	Shipping Assembly - 4 ft	N/A
	101201461	Shipping Assembly - 8 ft	
	101201472	Shipping Assembly - 11 ft	
	101201478	Shipping Assembly - 16 ft	
	101201479	Shipping Assembly - 22 ft	
*1	101201456	Gun, Scallop - 4 ft	N/A
	101201462	Gun, Scallop - 8 ft	
	101201473	Gun, Scallop - 11 ft	
	101201476	Gun, Scallop - 16 ft	
	101201485	Gun, Scallop - 22 ft	

Item	Description	Part No.
*2	Tube, Charge Holder - 4 ft	101201457
	Tube, Charge Holder - 8 ft	101201464
	Tube, Charge Holder - 11 ft	101201474
	Tube, Charge Holder - 16 ft	101201477
	Tube, Charge Holder - 22 ft	101201486
*3	Fixture, Alignment	100156519
*4	Screw, Set 0.25”-20 D x 0.75” L	100028806
*5	Charge Tube Cushion	100156401
*6	Screw, Hex Socket 0.25”-20 D x 0.63” L	100028226
7	O-Ring, Buna 90 Duro #343	100001972
	O-Ring, Viton 95 Duro #343	100009383
	O-Ring, Aflas 90 Duro #343	100157505
	O-Ring, Backup #343	100014417
8	O-Ring, Buna 90 Duro #334	100001963
	O-Ring, Viton 95 Duro #334	100009382
	O-Ring, Aflas 90 Duro #334	13416
	O-Ring, Backup #334	100005381
9	Insert, Alignment (PAI)	100005255
	Insert, Alignment (AAI)	100005222
10	Crossover, Firing Head	100005264
11	Tandem, Grooved	100005263
12	Crossover, Box x Pin	100005265
13	Bull Plug	100005266
14	Bi-Directional Booster	See Appendix A
15	Detonating Cord	See Appendix A
16	Charge - 28.0g RDX SH	100005311
	Charge - 28.0g HMX SH	100156995
17	Charge Clip	100157866
18	End Seal	100005251

* Included in Shipping Assembly.

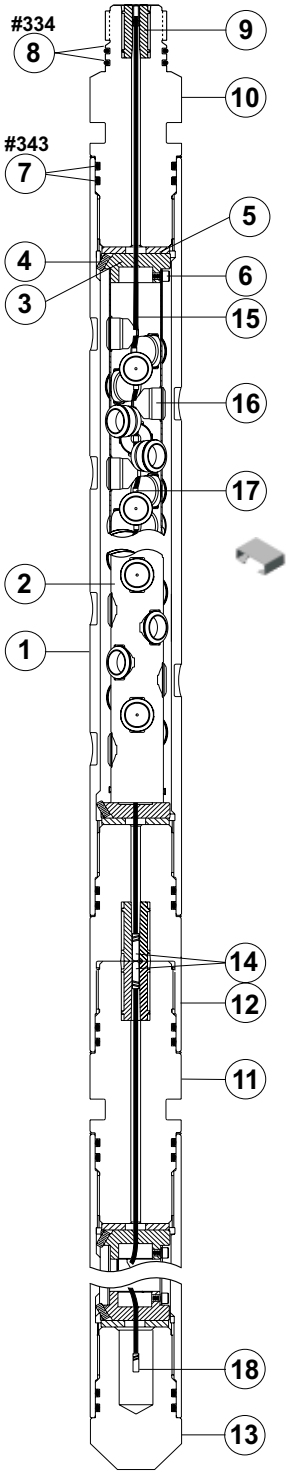

4 5/8-in. 14-spf 25.7°/128.5° SH VannGun™ System

4 $^{5}/_{8}$-in. 14-spf 25.7°/128.5° SH VannGun™ System

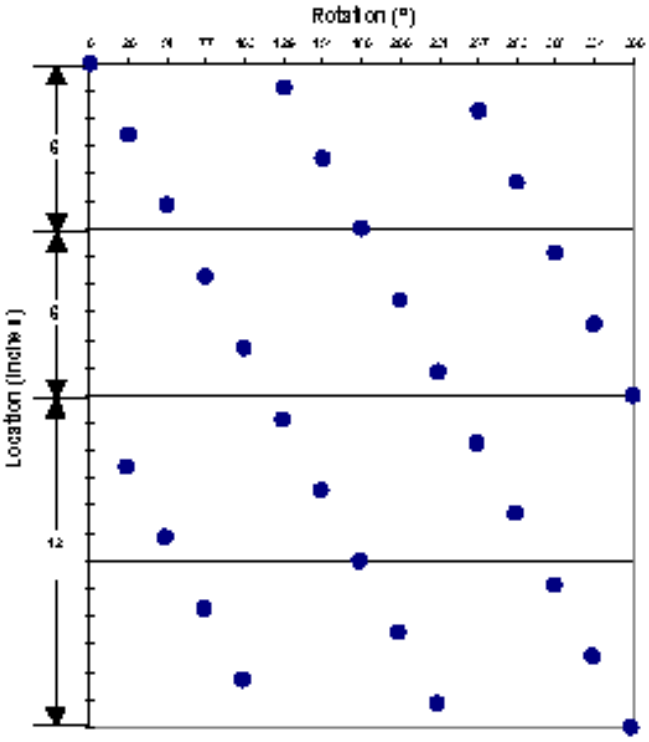

Shot Pattern for 4.625-in.
14-spf 25.7°/128.5° Phasing

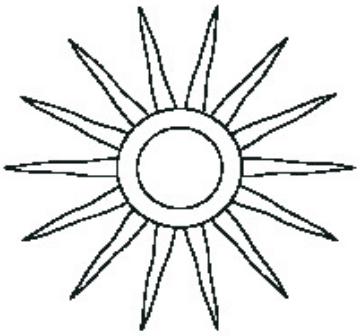

25.7°/128.5° Phasing
14 Perforation Planes

VannGun™ Weights

Length ft (m)	4ft (1.22)	8 ft (2.44)	11 ft (3.35)	16 ft (4.88)	22 ft (6.71)
Loaded lb (kg)	83 (37)	168 (76)	232 (105)	339 (154)	467 (212)
Spacer lb (kg)	69 (31)	137 (62)	189 (86)	275 (125)	378 (171)

4 5/8-in. 18-spf 45°/135° BH VannGun™ System

Item	Part No.	Description	Part No.
	Premium		Standard
	100155819	Shipping Assembly - 4 ft	101230699
	100155820	Shipping Assembly - 8 ft	101230707
	100155821	Shipping Assembly - 11 ft	101230709
	100155822	Shipping Assembly - 16 ft	101230711
	100155823	Shipping Assembly - 22 ft	101230712

*1	100156340	Gun, Scallop - 4 ft	101236988
	100156541	Gun, Scallop - 8 ft	101236989
	100156342	Gun, Scallop - 11 ft	101236992
	100156343	Gun, Scallop - 16 ft	101236994
	100156344	Gun, Scallop - 22 ft	101236993

Item	Description	Part No.
*2	Tube, Charge Holder - 4ft	100156527
	Tube, Charge Holder - 8ft	100156528
	Tube, Charge Holder - 11ft	100156529
	Tube, Charge Holder - 16ft	100156530
	Tube, Charge Holder - 22ft	100156531
*3	Fixture, Alignment	100156519
*4	Screw, Set 0.25”-20 D x 0.75” L	100028806
*5	Charge Tube Cushion	100156401
*6	Screw, Hex Socket 0.25”-20 D x 0.63” L	100028226
7	O-Ring, Buna 90 Duro #343	100001972
	O-Ring, Viton 95 Duro #343	100009383
	O-Ring, Aflas 90 Duro #343	100157505
	O-Ring, Backup #343	100014417
8	O-Ring, Buna 90 Duro #334	100001963
	O-Ring, Viton 95 Duro #334	100009382
	O-Ring, Aflas 90 Duro #334	13416
	O-Ring, Backup #334	100005381
9	Insert, Alignment	See Appendix B
10	Crossover, Firing Head	100005264
11	Tandem, Grooved	100005263
12	Crossover, Box x Pin	100005265
13	Bull Plug	100005266
14	Bi-Directional Booster	See Appendix A
15	Detonating Cord	See Appendix A
16	Charge - 20.0g RDX BH	100156990
	Charge - 20.0g HMX BH	AR
17	Charge Clip	100157866
18	End Seal	100005251

* Included in Shipping Assembly.
AR Available Upon Request.

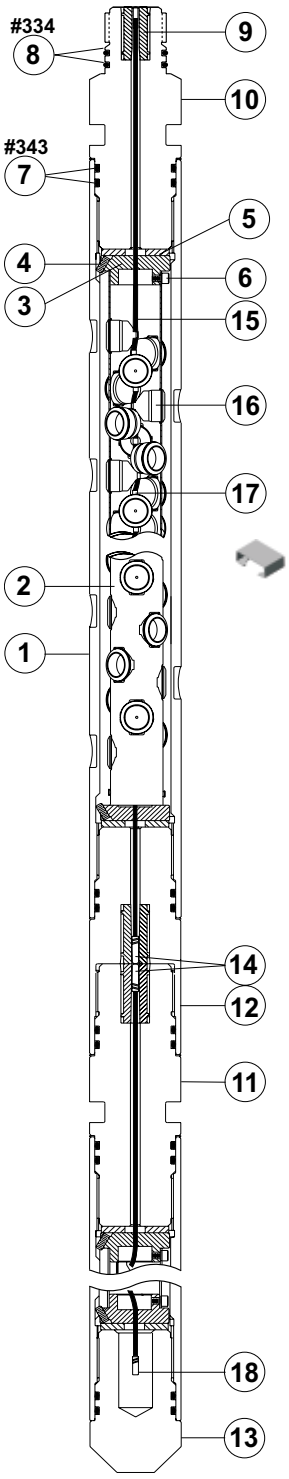

4 5/8-in. 18-spf 45°/135° BH VannGun™ System

4 $^{5}/_{8}$-in. 18-spf 45°/135° BH VannGun™ System

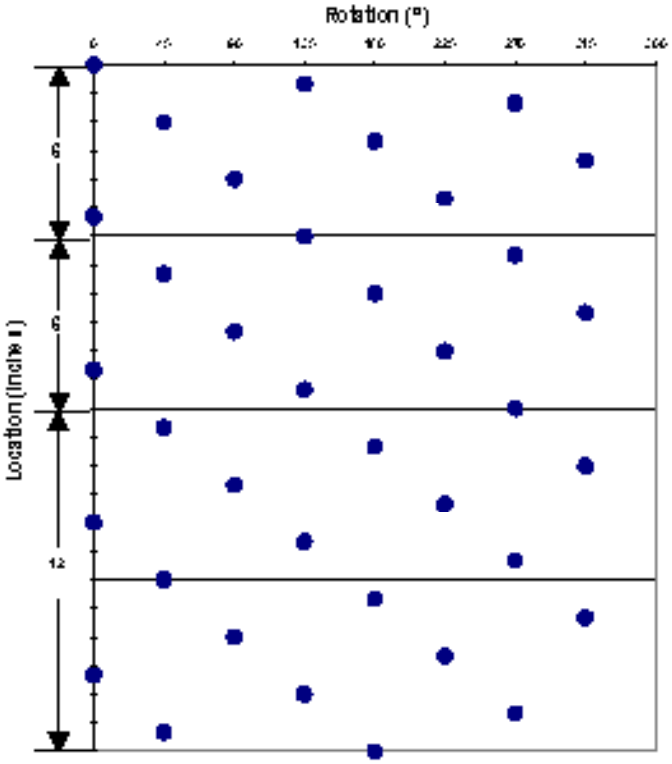

Shot Pattern for 4.625-in. 18-spf 45°/135° Phasing

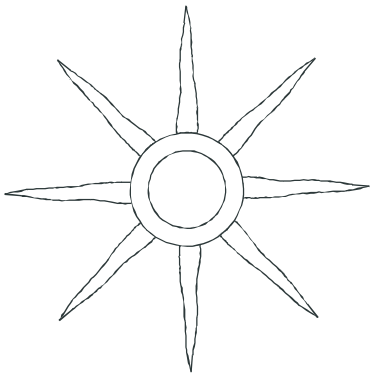

45°/135° Phasing
8 Perforation Planes

VannGun™ Weights

Length ft (m)	4ft (1.22)	8 ft (2.44)	11 ft (3.35)	16 ft (4.88)	22 ft (6.71)
Loaded lb (kg)	85 (39)	174 (79)	241 (109)	353 (160)	486 (221)
Spacer lb (kg)	69 (31)	137 (62)	189 (86)	275 (125)	378 (171)

4 5/8-in. 18-spf 45°/135° DP VannGun™ System

Item	Part No.	Description	Part No.
	Premium		Standard
	101237948	Shipping Assembly - 4 ft	101236981
	101237950	Shipping Assembly - 8 ft	101236982
	100155870	Shipping Assembly - 11 ft	101236984
	120125479	Shipping Assembly - 16 ft	101236985
	120125480	Shipping Assembly - 22 ft	101236987
*1	100156340	Gun, Scallop - 4 ft	101236988
	100156541	Gun, Scallop - 8 ft	101236989
	100156342	Gun, Scallop - 11 ft	101236992
	100156343	Gun, Scallop - 16 ft	101236994
	100156344	Gun, Scallop - 22 ft	101236993

Item	Description	Part No.
*2	Tube, Charge Holder - 4 ft	100156435
	Tube, Charge Holder - 8 ft	101237949
	Tube, Charge Holder - 11ft	100156436
	Tube, Charge Holder - 16 ft	100156437
	Tube, Charge Holder - 22 ft	100156438
*3	Fixture, Alignment	100156519
*4	Screw, Set 0.25”-20 D x 0.75” L	100028806
*5	Charge Tube Cushion	100156401
*6	Screw, Hex Socket 0.25”-20 D x 0.63” L	100028226
7	O-Ring, Buna 90 Duro #343	100001972
	O-Ring, Viton 95 Duro #343	100009383
	O-Ring, Aflas 90 Duro #343	100157505
	O-Ring, Backup #343	100014417
8	O-Ring, Buna 90 Duro #334	100001963
	O-Ring, Viton 95 Duro #334	100009382
	O-Ring, Aflas 90 Duro #334	13416
	O-Ring, Backup #334	100005381
9	Insert, Alignment (PAI)	100005255
	Insert, Alignment (AAI)	100005222
10	Crossover, Firing Head	100005264
11	Tandem, Grooved	100005263
12	Crossover, Box x Pin	100005265
13	Bull Plug	100005266
14	Bi-Directional Booster	See Appendix A
15	Detonating Cord	See Appendix A
16	Charge - 15.0g RDX DP	AR
	Charge - 15.0g HMX DP	100157005
17	Charge Clip	100157866
18	End Seal	100005251

* Included in Shipping Assembly.
AR Available Upon Request.

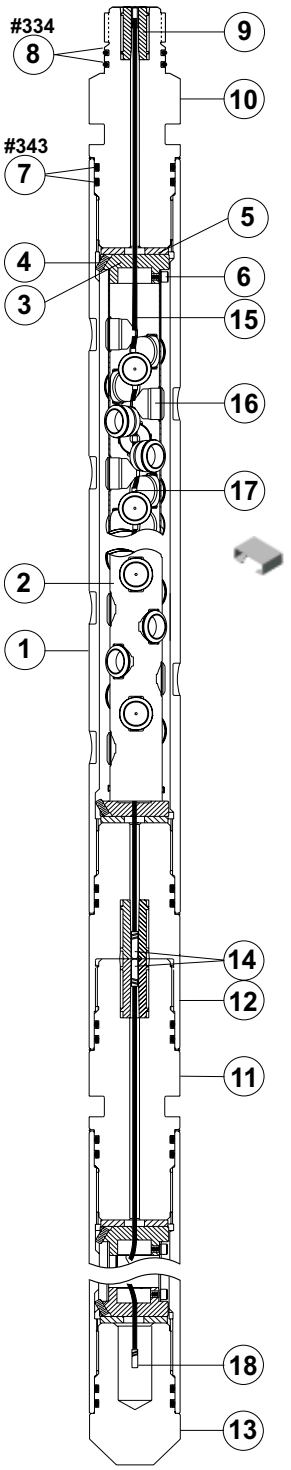

4 5/8-in. 18-spf 45°/135° DP VannGun™ System

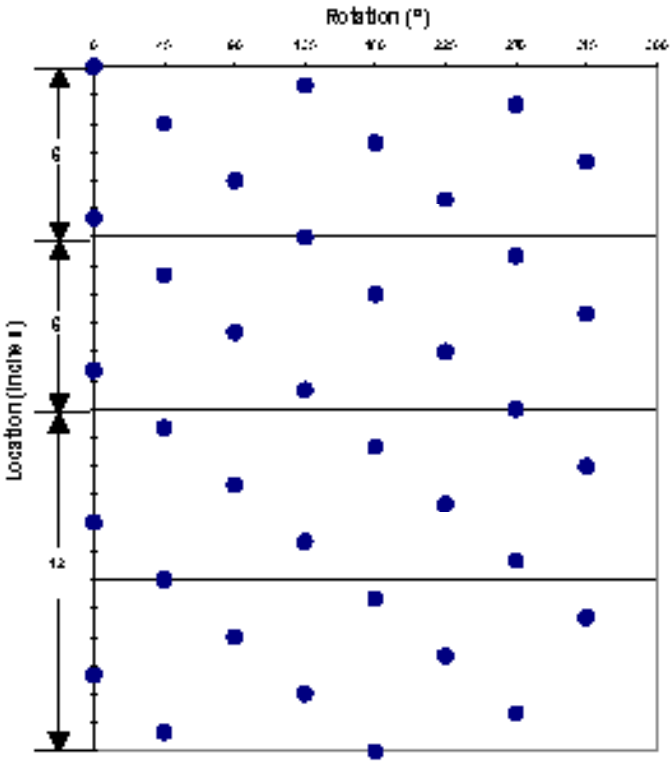

Shot Pattern for 4.625-in.
18-spf 45°/135° Phasing

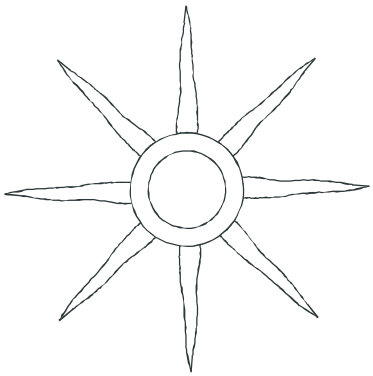

45°/135° Phasing
8 Perforation Planes

VannGun™ Weights

Length ft (m)	4ft (1.22)	8 ft (2.44)	11 ft (3.35)	16 ft (4.88)	22 ft (6.71)
Loaded lb (kg)	85 (39)	174 (79)	241 (109)	353 (160)	486 (221)
Spacer lb (kg)	69 (31)	137 (62)	189 (86)	275 (125)	378 (171)

4 3/4-in. 12-spf OMNI™ VannGun™ System

Item	Part No.	Description	Part No.
	Premium		Standard
	101216238	Shipping Assembly - 4 ft	N/A
	101216239	Shipping Assembly - 8 ft	
	101216240	Shipping Assembly - 11 ft	
	101216241	Shipping Assembly - 16 ft	
	101216242	Shipping Assembly - 22 ft	
*1	101216248	Gun, Scallop - 4 ft	N/A
	101216249	Gun, Scallop - 8 ft	
	101216250	Gun, Scallop - 11 ft	
	101216251	Gun, Scallop - 16 ft	
	101216252	Gun, Scallop - 22 ft	

Item	Description	Part No.
*2	Tube, Charge Holder - 4 ft	100156511
	Tube, Charge Holder - 8 ft	100156512
	Tube, Charge Holder - 11 ft	100156558
	Tube, Charge Holder - 16 ft	100156513
	Tube, Charge Holder - 22 ft	100156559
*3	Fixture, Alignment	100156519
*4	Screw, Set 0.25”-20 D x 0.75” L	100028806
*5	Charge Tube Cushion	100156401
*6	Screw, Hex Socket 0.25”-20 D x 0.63” L	100028226
7	O-Ring, Buna 90 Duro #343	100001972
	O-Ring, Viton 95 Duro #343	100009383
	O-Ring, Aflas 90 Duro #343	100157505
	O-Ring, Backup #343	100014417
8	O-Ring, Buna 90 Duro #334	100001963
	O-Ring, Viton 95 Duro #334	100009382
	O-Ring, Aflas 90 Duro #334	13416
	O-Ring, Backup #334	100005381
9	Insert, Alignment (PAI)	100005255
	Insert, Alignment (AAI)	100005222
10	Crossover, Firing Head	100005264
11	Tandem, Grooved	100005263
12	Crossover, Box x Pin	100005265
13	Bull Plug	100005266
14	Bi-Directional Booster	See Appendix A
15	Detonating Cord	See Appendix A
16	Charge - 22.7g RDX DP	100005324
	Charge - 22.7g RDX DP/LD	100005325
	Charge - 25.0g RDX BH	100005319
	Charge - 22.7g RDX BH/LD	100005326
	Charge - 22.7g HMX Millennium™	101210674
	Charge - 22.7g HMX DP	100014352
	Charge - 22.7g HMX DP/LD	100005340
	Charge - 25.0g HMX BH	100157006
	Charge - 22.7g HMX BH/LD	AR
	Charge - 26.0 PYX DP	AR
17	Charge Clip	100005250
18	End Seal	100005251

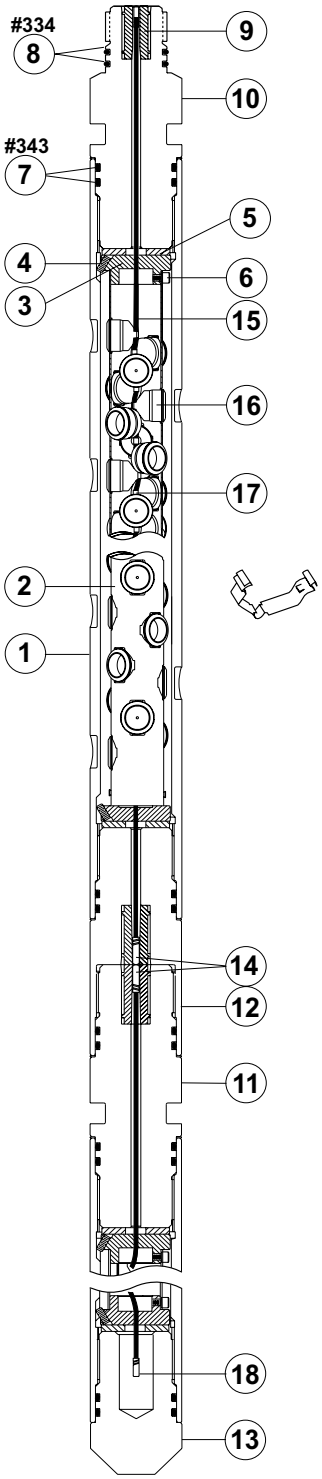

4 3/4-in. 12-spf OMNI™ VannGun™ System

* Included in Shipping Assembly.
AR Available Upon Request.

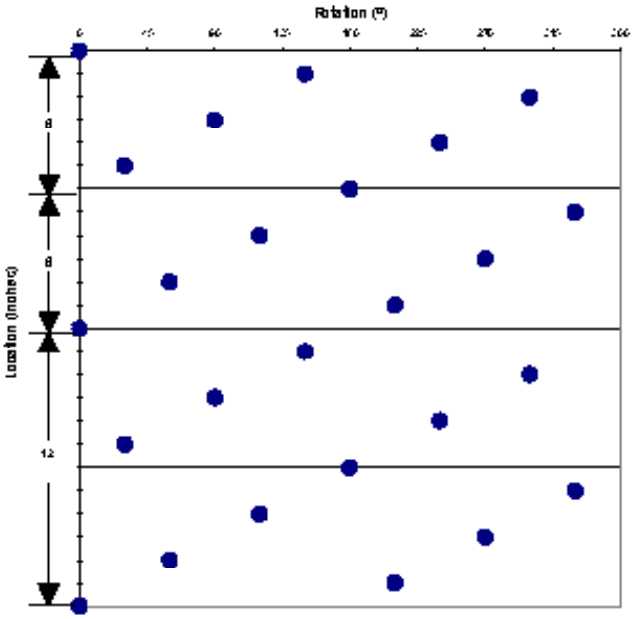

Shot Pattern for 4.75-in.
12-spf 30°/150° Phasing

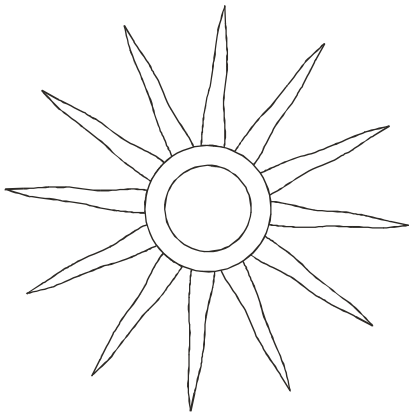

30°/150° Phasing
12 Perforation Planes

VannGun™ Weights

Length ft (m)	4ft (1.22)	8 ft (2.44)	11 ft (3.35)	16 ft (4.88)	22 ft (6.71)
Loaded lb (kg)	88 (40)	179 (81)	248 (113)	363 (165)	500 (227)
Spacer lb (kg)	71 (32)	142 (64)	195 (89)	284 (129)	391 (177)

4 3/4-in. 12-spf OMNI™ SH VannGun™ System

Item	Part No.	Description	Part No.
	Premium		Standard
	101234613	Shipping Assembly - 4 ft	N/A
	101234615	Shipping Assembly - 8 ft	
	101234618	Shipping Assembly - 11 ft	
	101234616	Shipping Assembly - 16 ft	
	101234617	Shipping Assembly - 22 ft	
*1	101216248	Gun, Scallop - 4 ft	N/A
	101216249	Gun, Scallop - 8 ft	
	101216250	Gun, Scallop - 11 ft	
	101216251	Gun, Scallop - 16 ft	
	101216252	Gun, Scallop - 22 ft	

Item	Description	Part No.
*2	Tube, Charge Holder - 4 ft	100156514
	Tube, Charge Holder - 8 ft	100156515
	Tube, Charge Holder - 11 ft	100156518
	Tube, Charge Holder - 16 ft	100156516
	Tube, Charge Holder - 22 ft	100156517
*3	Fixture, Alignment	100156519
*4	Screw, Set 0.25”-20 D x 0.75” L	100028806
*5	Charge Tube Cushion	100156401
*6	Screw, Hex Socket 0.25”-20 D x 0.63” L	100028226
7	O-Ring, Buna 90 Duro #343	100001972
	O-Ring, Viton 95 Duro #343	100009383
	O-Ring, Aflas 90 Duro #343	100157505
	O-Ring, Backup #343	100014417
8	O-Ring, Buna 90 Duro #334	100001963
	O-Ring, Viton 95 Duro #334	100009382
	O-Ring, Aflas 90 Duro #334	13416
	O-Ring, Backup #334	100005381
9	Insert, Alignment (PAI)	100005255
	Insert, Alignment (AAI)	100005222
10	Crossover, Firing Head	100005264
11	Tandem, Grooved	100005263
12	Crossover, Box x Pin	100005265
13	Bull Plug	100005266
14	Bi-Directional Booster	See Appendix A
15	Detonating Cord	See Appendix A
16	Charge - 28.0g RDX SH	100005311
	Charge - 28.0g RDX SH/LD	101228756
	Charge - 28.0g HMX SH	100156995
	Charge - 28.0g HMX SH/LD	101233690
17	Charge Clip	100157866
18	End Seal	100005251

* Included in Shipping Assembly.

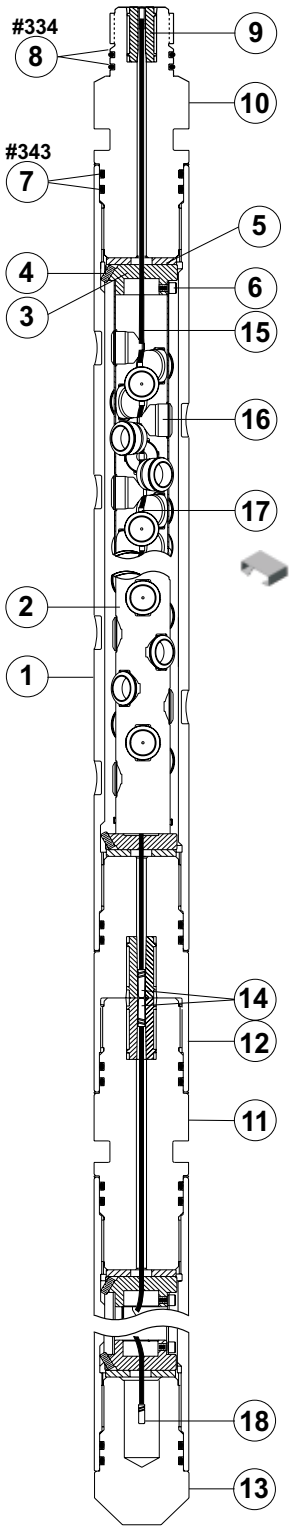

4 3/4-in. 12-spf OMNI™ SH VannGun™ System

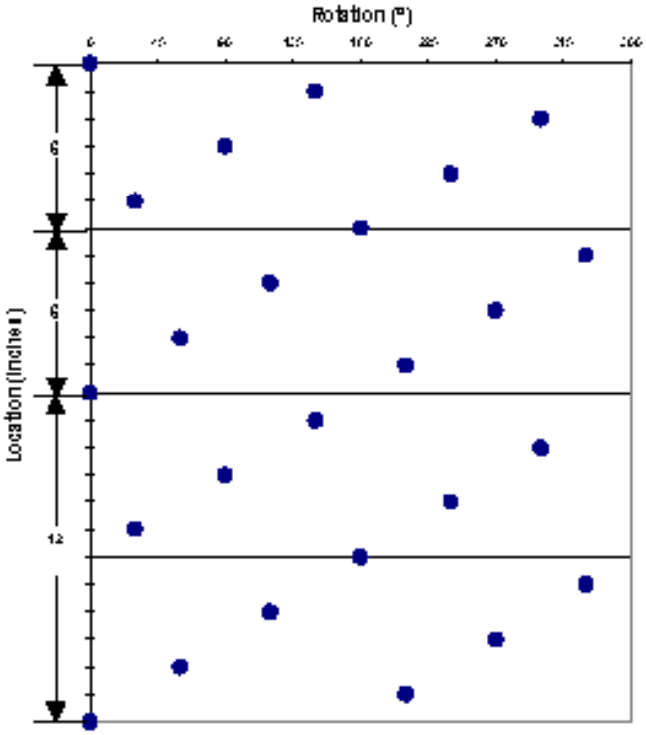

Shot Pattern for 4.75-in.
12-spf 30°/150° Phasing

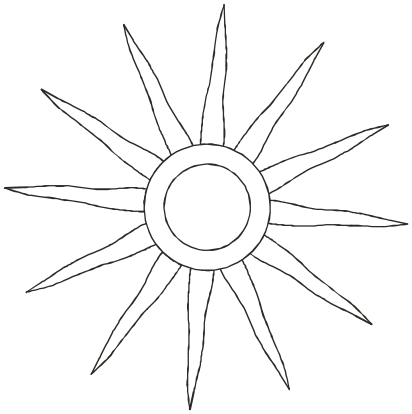

30°/150° Phasing
12 Perforation Planes

VannGun™ Weights

Length ft (m)	4ft (1.22)	8 ft (2.44)	11 ft (3.35)	16 ft (4.88)	22 ft (6.71)
Loaded lb (kg)	88 (40)	179 (81)	248 (113)	363 (165)	500 (227)
Spacer lb (kg)	71 (32)	142 (64)	195 (89)	284 (129)	391 (177)

4 5/8-in. 4-spf 180° VannGun™ System

Item	Part No.	Description	Part No.
	Premium		Standard
	101222302	Shipping Assembly - 4 ft	101229295
	101222303	Shipping Assembly - 8 ft	101229296
	101222304	Shipping Assembly - 11 ft	101229297
	101222305	Shipping Assembly - 16 ft	101229301
	101222306	Shipping Assembly - 22 ft	101229302
*1	101222287	Gun, Scallop - 4 ft	101229309
	101222288	Gun, Scallop - 8 ft	101229313
	101222289	Gun, Scallop - 11 ft	101229314
	101222290	Gun, Scallop - 16 ft	101229315
	101222291	Gun, Scallop - 22 ft	101229316

Item	Description	Part No.
*2	Tube, Charge Holder - 4 ft	101222317
	Tube, Charge Holder - 8 ft	101222318
	Tube, Charge Holder - 11 ft	101222319
	Tube, Charge Holder - 16 ft	101222320
	Tube, Charge Holder - 22 ft	101222321
*3	Fixture, Alignment	100014268
*4	Screw, Set 0.25”-20 D x 0.75” L	100028806
*5	Charge Tube Cushion	100156401
*6	Screw, Hex Socket 0.25”-20 D x 0.50” L	100028225
7	O-Ring, Buna 90 Duro #343	100001972
	O-Ring, Viton 95 Duro #343	100009383
	O-Ring, Aflas 90 Duro #343	100157505
	O-Ring, Backup #343	100014417
8	O-Ring, Buna 90 Duro #334	100001963
	O-Ring, Viton 95 Duro #334	100009382
	O-Ring, Aflas 90 Duro #334	13416
	O-Ring, Backup #334	100005381
9	Insert, Alignment (PAI)	100005255
	Insert, Alignment (AAI)	100005222
10	Crossover, Firing Head	100005264
11	Tandem, Grooved	100005263
12	Crossover, Box x Pin	100005265
13	Bull Plug	100005266
14	Bi-Directional Booster	See Appendix A
15	Detonating Cord	See Appendix A
16	Charge - 24.0g RDX SDP	100008014
	Charge - 32.0g RDX DP	100005322
	Charge - 25.0g HMX ***Millennium***™	101233819
	Charge - 32.0g HMX DP	100005327
	Charge - 25.0g HMX SDP	100008249
	Charge - 24.2g PYX SDP	100008015
	Charge - 32.0g PYX/BRX DP	100005323
	Charge - 32.6g HNS SDP	101282511
	Charge - 24.0g RDX SDP/LD	101293450
17	Charge Clip	100005336
18	End Seal	100005251
19	Charge Tube Centralizer	100014269

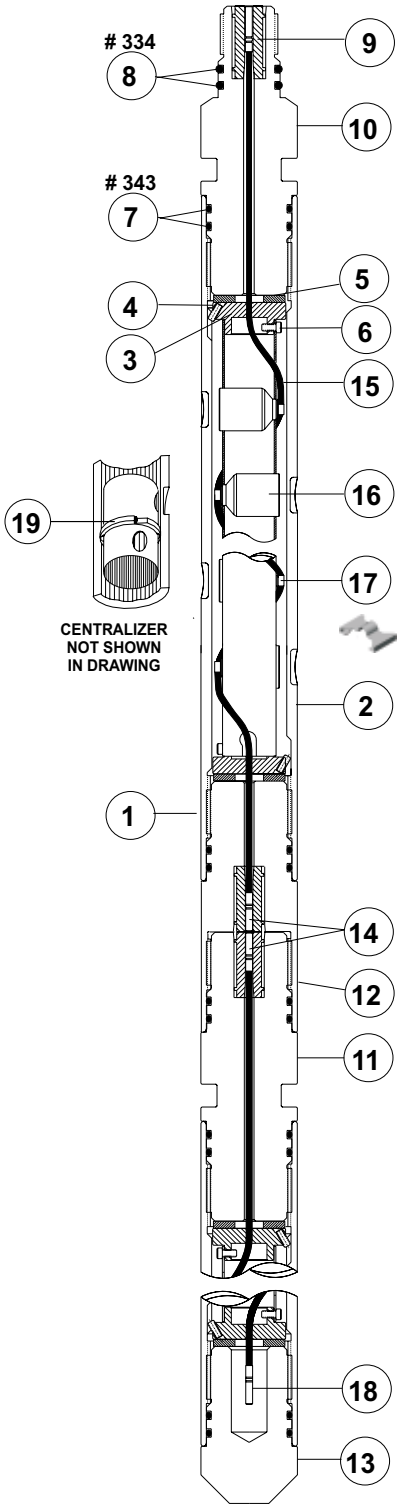

4 5/8-in. 4-spf 180° VannGun™ System

* Included in Shipping Assembly.

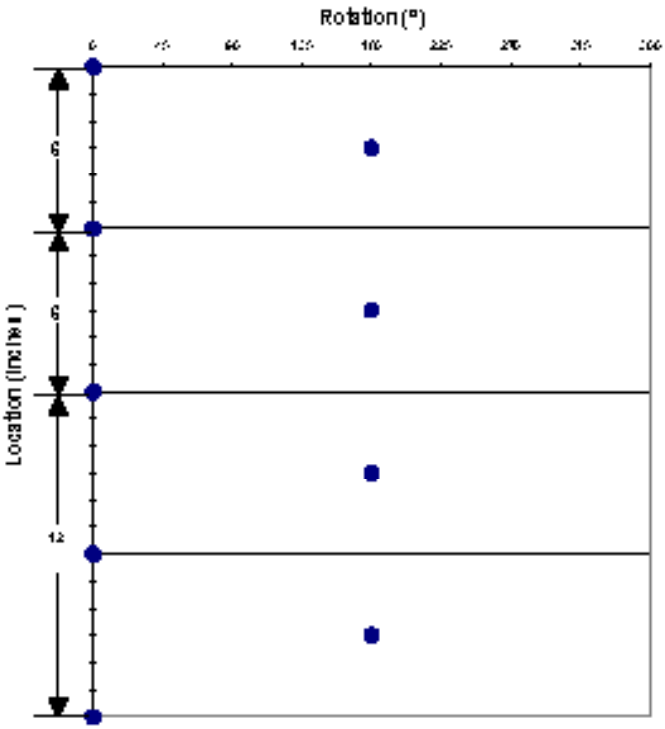

Shot Pattern for 4.625-in.
4-spf 180° Phasing

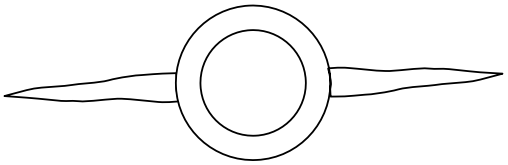

180° Phasing
2 Perforation Planes

VannGun™ Weights

Length ft (m)	4ft (1.22)	8 ft (2.44)	11 ft (3.35)	16 ft (4.88)	22 ft (6.71)
Length ft (m)	81 (37)	163 (74)	225 (102)	327 (148)	450 (204)
Length ft (m)	74 (34)	148 (67)	204 (93)	297 (135)	408 (185)

4-in. 6-spf 60° VannGun™ System

Item	Part No.	Description	Part No.
	Premium		Standard
	100014181	Shipping Assembly - 4 ft	N/A
	100008244	Shipping Assembly - 8 ft	
	100008245	Shipping Assembly - 11 ft	
	100005193	Shipping Assembly - 16 ft	
	100005194	Shipping Assembly - 22 ft	
*1	100156283	Gun, Scallop - 4 ft	N/A
	100156284	Gun, Scallop - 8 ft	
	100156285	Gun, Scallop - 11 ft	
	100156286	Gun, Scallop - 16 ft	

Item	Description	Part No.
*2	Tube, Charge Holder - 4 ft	100156492
	Tube, Charge Holder - 8 ft	100156493
	Tube, Charge Holder - 11 ft	100156495
	Tube, Charge Holder - 16 ft	100014267
	Tube, Charge Holder - 22 ft	100156560
*3	Fixture, Alignment	100156398
*4	Screw, Set 0.25”-20 D x 0.75” L	100028806
*5	Charge Tube Cushion	100156399
*6	Screw, Hex Socket 0.25”-20 D x 0.50” L	100028225
7	O-Ring, Buna 90 Duro #237	100002008
	O-Ring, Viton 95 Duro #237	100064882
	O-Ring, Aflas 90 Duro #237	101282585
	O-Ring, Backup #237	101282854
8	O-Ring, Buna 90 Duro #334	100001963
	O-Ring, Viton 95 Duro #334	100009382
	O-Ring, Aflas 90 Duro #334	13416
	O-Ring, Backup #334	100005381
9	Insert, Alignment (PAI)	100005255
	Insert, Alignment (AAI)	100005222
10	Crossover, Firing Head	100008007
11	Tandem, Grooved	100005274
12	Crossover, Box x Pin	100005275
13	Bull Plug	100008006
14	Bi-Directional Booster	See Appendix A
15	Detonating Cord	See Appendix A
	Charge - 32.0g RDX DP	100005322
	Charge - 32.2g PYX/BRX DP	100005323
	Charge - 24.0g RDX SDP	100008014
	Charge - 25.0g HMX SDP	100008249
	Charge - 25.0g HMX ***Millennium***™	101233819
	Charge - 24.2g PYX SDP	100008015
	Charge - 24.0g RDX SDP/LD	101293450
	Charge - 32.0g HMX DP	100005327
17	Charge Clip	100005336
18	End Seal	100005251

*Included in Shipping Assembly.

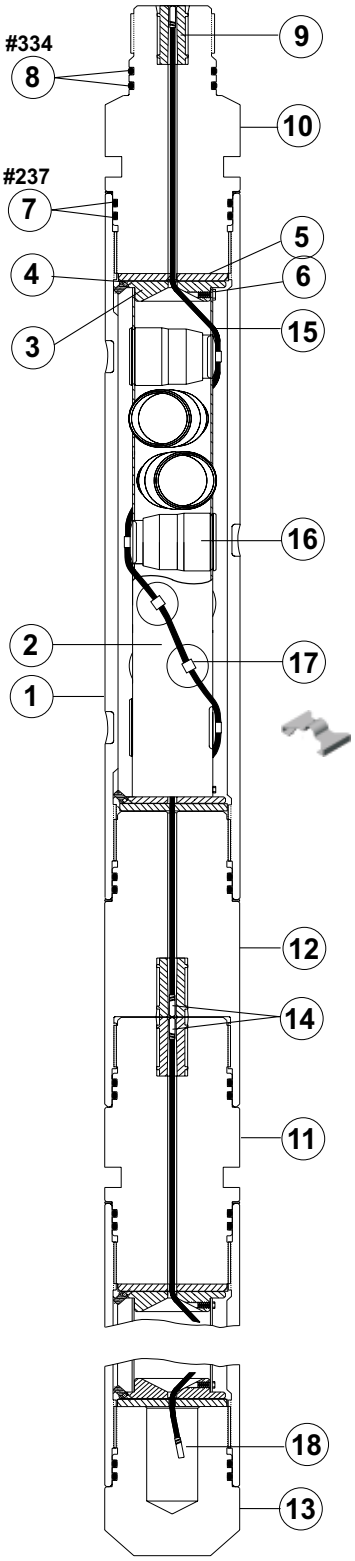

4-in. 6-spf 60° VannGun™ System

4-in. 6-spf 60° VannGun™ System

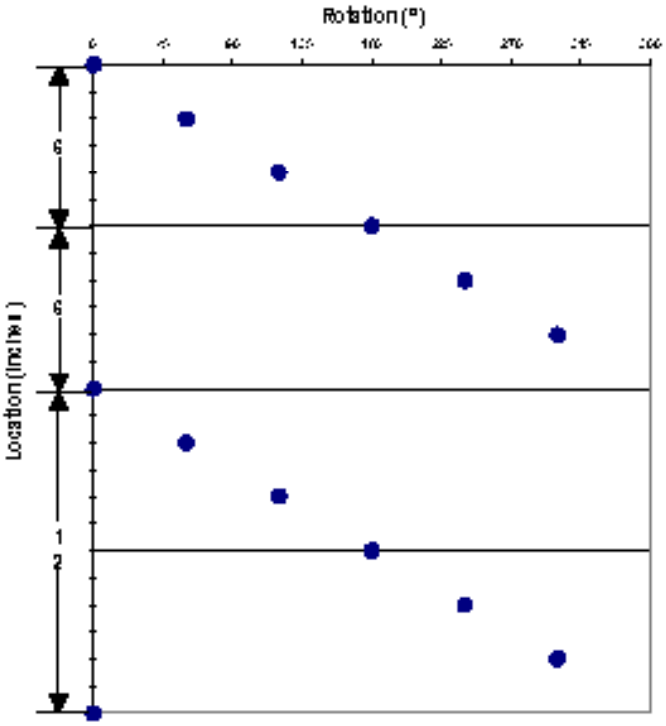

Shot Pattern for 4-in. 6-spf 60° Phasing

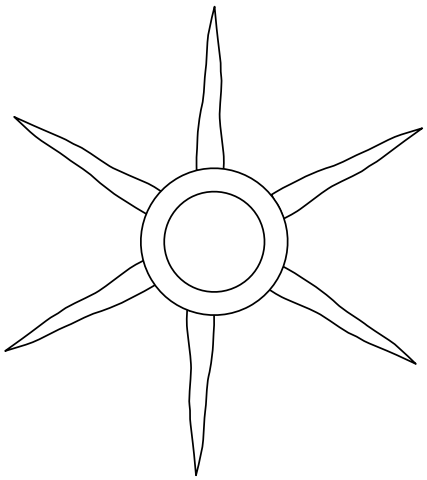

60° Phasing
6 Perforation Planes

VannGun™ Weights

Length ft (m)	4ft (1.22)	8 ft (2.44)	11 ft (3.35)	16 ft (4.88)	22 ft (6.71)
Loaded lb (kg)	71 (32)	146 (66)	201 (91)	294 (133)	406 (184)
Spacer lb (kg)	56 (25)	112 (51)	154 (70)	224 (102)	308 (140)

4 5/8-in. 4-spf 180° *Millennium*™ VannGun™ System

Item	Part No.	Description	Part No.
	Premium		Standard
	N/A	Shipping Assembly - 4 ft	101287404
		Shipping Assembly - 8 ft	101287405
		Shipping Assembly - 11 ft	101287406
		Shipping Assembly - 16 ft	101287407
		Shipping Assembly - 22 ft	101287408
*1	N/A	Gun, Scallop - 4 ft	101229309
		Gun, Scallop - 8 ft	101229313
		Gun, Scallop - 11 ft	101229314
		Gun, Scallop - 16 ft	101229315
		Gun, Scallop - 22 ft	101229316

Item	Description	Part No.
*2	Tube, Charge Holder - 4 ft	101287411
	Tube, Charge Holder - 8 ft	101287417
	Tube, Charge Holder - 11 ft	101287418
	Tube, Charge Holder - 16 ft	101287419
	Tube, Charge Holder - 22 ft	101287421
*3	Fixture, Alignment	100156507
*4	Screw, Set 0.25”-20 D x 0.75” L	100028806
*5	Charge Tube Cushion	100156401
*6	Screw, Hex Socket 0.25”-20 D x 0.50” L	100028225
7	O-Ring, Buna 90 Duro #343	100001972
	O-Ring, Viton 95 Duro #343	100009383
	O-Ring, Aflas 90 Duro #343	100157505
	O-Ring, Backup #343	100014417
8	O-Ring, Buna 90 Duro #334	100001963
	O-Ring, Viton 95 Duro #334	100009382
	O-Ring, Aflas 90 Duro #334	13416
	O-Ring, Backup #334	100005381
9	Insert, Alignment (PAI)	100005255
	Insert, Alignment (AAI)	100005222
10	Crossover, Firing Head	100005264
11	Tandem, Grooved	100005263
12	Crossover, Box x Pin	100005265
13	Bull Plug	100005266
14	Bi-Directional Booster	See Appendix A
15	Detonating Cord	See Appendix A
16	Charge - 39.0g HNS SDP	101287306
	Charge - 39.0g HMX ***Millennium***™	101210636
17	Charge Clip	100005336
18	End Seal	100005251

***Included in Shipping Assembly.**

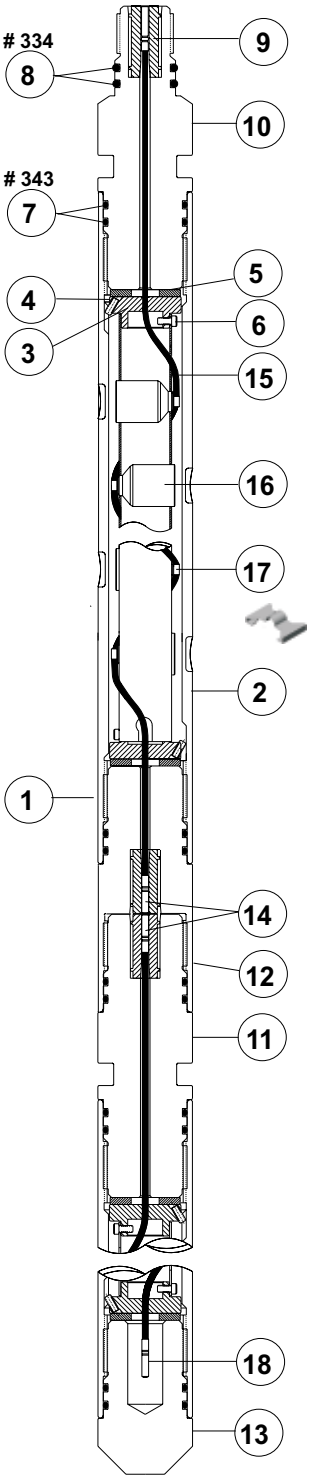

4 5/8-in. 4-spf 180°
Millennium™ VannGun™ System

4 $^{5}/_{8}$-in. 4-spf 180° *Millennium*™ VannGun™ System

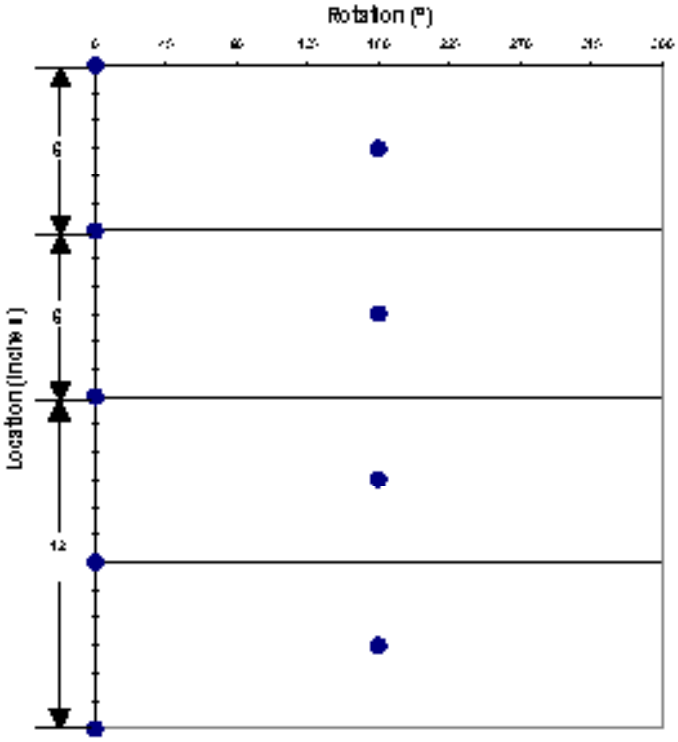

Shot Pattern for 4.625-in.
4-spf 180° Phasing

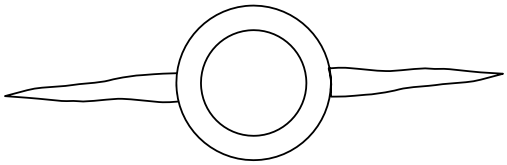

180° Phasing
2 Perforation Planes

VannGun™ Weights

Length ft (m)	4ft (1.22)	8 ft (2.44)	11 ft (3.35)	16 ft (4.88)	22 ft (6.71)
Loaded lb (kg)	81 (37)	163 (74)	225 (102)	327 (148)	450 (204)
Spacer lb (kg)	74 (34)	148 (67)	204 (93)	297 (135)	408 (185)

4 5/8-in. 5-spf 72° MaxForce™ VannGun™ System

Item	Part No.	Description	Part No.
	Premium		Standard
	101706642	Shipping Assembly - 4 ft	
	101706892	Shipping Assembly - 8 ft	
	101706893	Shipping Assembly - 11 ft	
	101706894	Shipping Assembly - 16 ft	
	101706895	Shipping Assembly - 22 ft	
*1	100156326	Gun, Scallop - 4 ft	
	100156327	Gun, Scallop - 8 ft	
	100156328	Gun, Scallop - 11 ft	
	100156329	Gun, Scallop - 16 ft	
	100156330	Gun, Scallop - 22 ft	

Item	Description	Part No.
*2	Tube, Charge Holder - 4 ft	101705733
	Tube, Charge Holder - 8 ft	101705749
	Tube, Charge Holder - 11 ft	101705750
	Tube, Charge Holder - 16 ft	101705751
	Tube, Charge Holder - 22 ft	101705752
*3	Fixture, Alignment	100156507
*4	Screw, Set 0.25”-20 D x 0.75” L	100028806
*5	Charge Tube Cushion	100156401
*6	Screw, Hex Socket 0.25”-20 D x 0.50” L	100028225
7	O-Ring, Buna 90 Duro #343	100001972
	O-Ring, Viton 95 Duro #343	100009383
	O-Ring, Aflas 90 Duro #343	100157505
	O-Ring, Backup #343	100014417
8	O-Ring, Buna 90 Duro #334	100001963
	O-Ring, Viton 95 Duro #334	100009382
	O-Ring, Aflas 90 Duro #334	13416
	O-Ring, Backup #334	100005381
9	Insert, Alignment (PAI)	100005255
	Insert, Alignment (AAI)	100005222
10	Crossover, Firing Head	100005264
11	Tandem, Grooved	100005263
12	Crossover, Box x Pin	100005265
13	Bull Plug	100005266
14	Bi-Directional Booster	See Appendix A
15	Detonating Cord	See Appendix A
16	Charge - 39.0g HMX **MaxForce™**	101702911
*17	Charge Clip	100157866
18	End Seal	100005251
19	Centralizer Tandem (not shown)	100083048
20	Centralizer Ring (not shown)	100156225

*Included in Shipping Assembly.
MaxForce™ is Proprietary to Halliburton

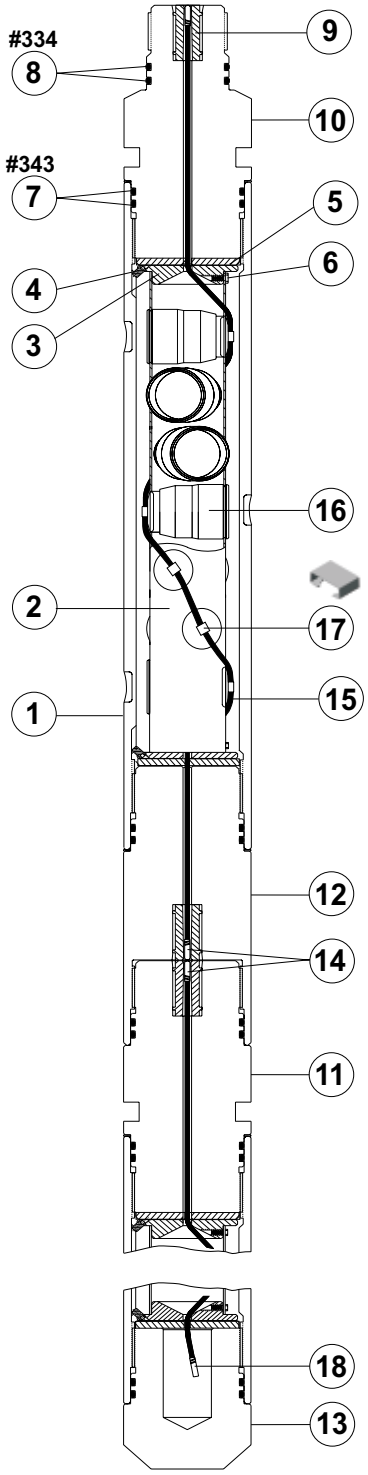

4 5/8-in. 5-spf 72° MaxForce™ VannGun™ System

4 $^{5}/_{8}$-in. 5-spf 72° MaxForce™ VannGun™ System

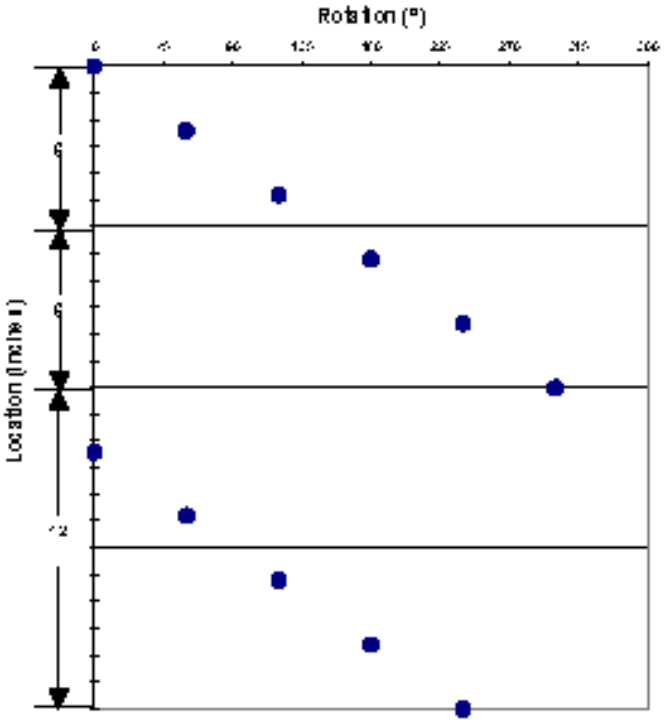

Shot Pattern for 4.625-in. 5-spf 60° Phasing

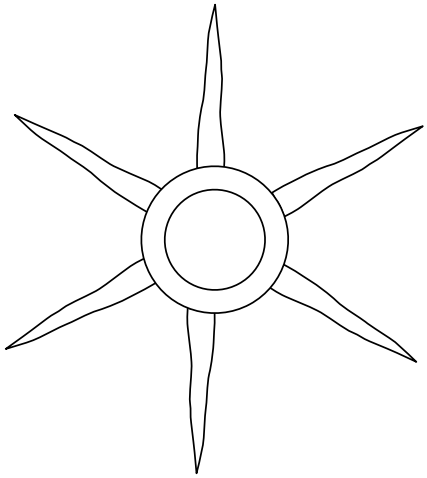

60° Phasing
6 Perforation Planes

VannGun™ Weights

Length ft (m)	4ft (1.22)	8 ft (2.44)	11 ft (3.35)	16 ft (4.88)	22 ft (6.71)
Loaded lb (kg)	81 (37)	164 (74)	226 (102)	329 (149)	453 (206)
Spacer lb (kg)	74 (33)	148 (67)	203 (92)	295 (134)	406 (184)

4 5/8-in. 5-spf 135° SH VannGun™ System

Item	Part No.	Description	Part No.
	Premium		Standard
	N/A	Shipping Assembly - 4 ft	101268920
		Shipping Assembly - 8 ft	101268921
		Shipping Assembly - 11 ft	101268922
		Shipping Assembly - 16 ft	101268923
		Shipping Assembly - 22 ft	101268924
*1	N/A	Gun, Scallop - 4 ft	101268925
		Gun, Scallop - 8 ft	101268926
		Gun, Scallop - 11 ft	101268928
		Gun, Scallop - 16 ft	101268929
		Gun, Scallop - 22 ft	101268930

Item	Description	Part No.
*2	Tube, Charge Holder - 4 ft	101268932
	Tube, Charge Holder - 8 ft	101268933
	Tube, Charge Holder - 11 ft	101268934
	Tube, Charge Holder - 16 ft	101268935
	Tube, Charge Holder - 22 ft	101268936
*3	Fixture, Alignment	100156507
*4	Screw, Set 0.25”-20 D x 0.75” L	100028806
*5	Charge Tube Cushion	100156401
*6	Screw, Hex Socket 0.25”-20 D x 0.50” L	100028225
7	O-Ring, Buna 90 Duro #343	100001972
	O-Ring, Viton 95 Duro #343	100009383
	O-Ring, Aflas 90 Duro #343	100157505
	O-Ring, Backup #343	100014417
8	O-Ring, Buna 90 Duro #334	100001963
	O-Ring, Viton 95 Duro #334	100009382
	O-Ring, Aflas 90 Duro #334	13416
	O-Ring, Backup #334	100005381
9	Insert, Alignment (PAI)	100005255
	Insert, Alignment (AAI)	100005222
10	Crossover, Firing Head	100005264
11	Tandem, Grooved	100005263
12	Crossover, Box x Pin	100005265
13	Bull Plug	100005266
14	Bi-Directional Booster	See Appendix A
15	Detonating Cord	See Appendix A
16	Charge - 56.5g RDX SH	101240223
17	Charge Clip	100157866
18	End Seal	100005251

*Included in Shipping Assembly.

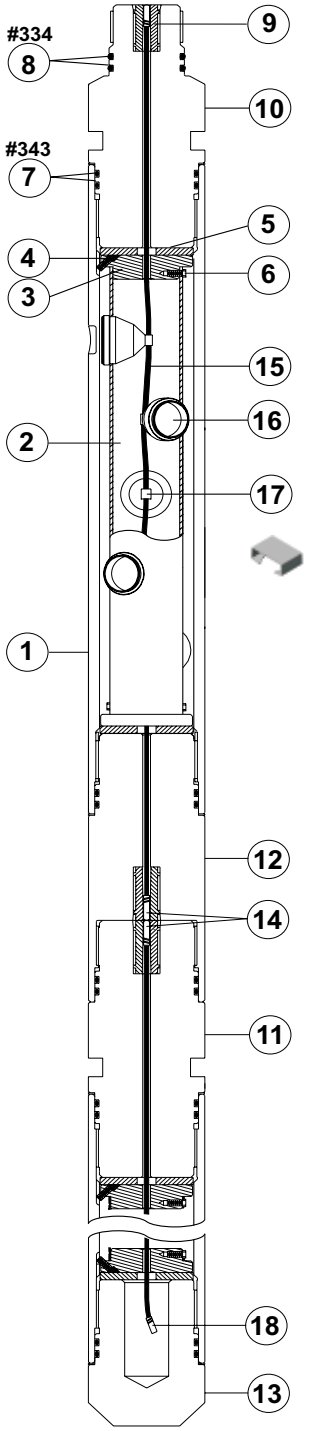

4 5/8-in. 5-spf 135° SH VannGun™ System

4 $^{5}/_{8}$-in. 5-spf 135° SH VannGun™ System

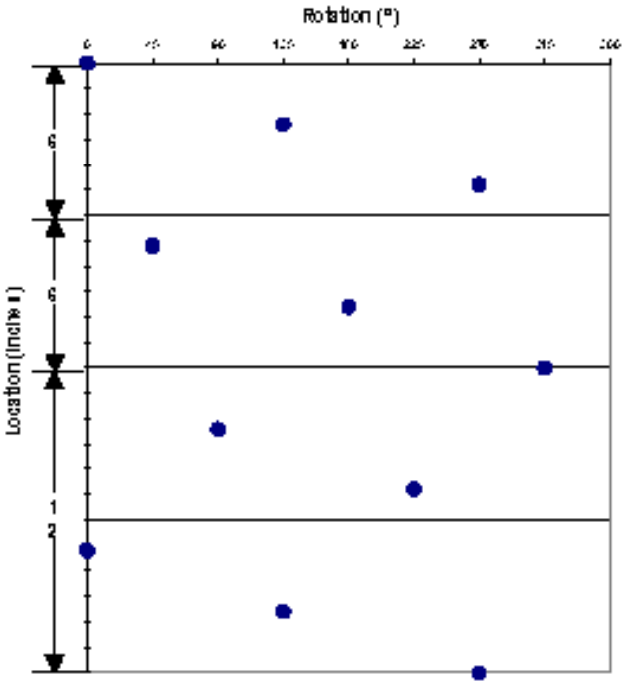

Shot Pattern for 4.625-in.
5-spf 135° Phasing

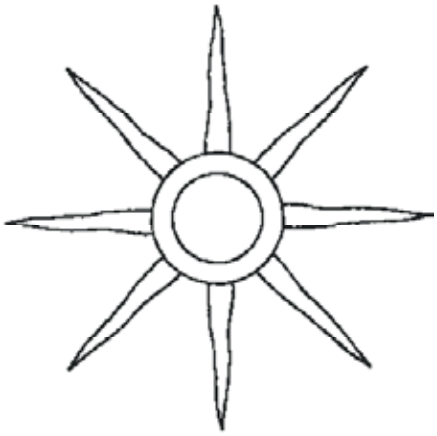

135° Phasing
8 Perforation Planes

VannGun™ Weights-lb (kg)

Length ft (m)	4ft (1.22)	8 ft (2.44)	11 ft (3.35)	16 ft (4.88)	22 ft (6.71)
Loaded lb (kg)	81 (47)	164 (74)	226 (102)	329 (149)	453 (206)
Spacer lb (kg)	74 (33)	148 (67)	203 (92)	295 (134)	406 (184)

4 5/8-in. 6-spf 60° (6-spf Carrier) VannGun™ System

Item	Part No.	Description	Part No.
	Premium		Standard
	N/A	Shipping Assembly - 4 ft	101277681
		Shipping Assembly - 8 ft	101277678
		Shipping Assembly - 11 ft	101277679
		Shipping Assembly - 16 ft	101277677
		Shipping Assembly - 22 ft	101277676
*1	N/A	Gun, Scallop - 4 ft	101277703
		Gun, Scallop - 8 ft	101277707
		Gun, Scallop - 11 ft	101277708
		Gun, Scallop - 16 ft	101277709
		Gun, Scallop - 22 ft	101277713

Item	Description	Part No.
*2	Tube, Charge Holder - 4 ft	100156492
	Tube, Charge Holder - 8 ft	100156493
	Tube, Charge Holder - 11 ft	100156495
	Tube, Charge Holder - 16 ft	100014267
	Tube, Charge Holder - 22 ft	100156560
*3	Fixture, Alignment	100014268
*4	Screw, Set 0.25”-20 D x 0.75” L	100028806
*5	Charge Tube Cushion	100156401
*6	Screw, Hex Socket 0.25”-20 D x 0.50” L	100028225
7	O-Ring, Buna 90 Duro #343	100001972
	O-Ring, Viton 95 Duro #343	100009383
	O-Ring, Aflas 90 Duro #343	100157505
	O-Ring, Backup #343	100014417
8	O-Ring, Buna 90 Duro #334	100001963
	O-Ring, Viton 95 Duro #334	100009382
	O-Ring, Aflas 90 Duro #334	13416
	O-Ring, Backup #334	100005381
9	Insert, Alignment (PAI)	100005255
	Insert, Alignment (AAI)	100005222
10	Crossover, Firing Head	100005264
11	Tandem, Grooved	100005263
12	Crossover, Box x Pin	100005265
13	Bull Plug	100005266
14	Bi-Directional Booster	See Appendix A
15	Detonating Cord	See Appendix A
16	Charge - 24.0g RDX SDP	100008014
	Charge - 32.0g RDX DP	100005322
	Charge - 25.0g HMX ***Millennium***™	101233819
	Charge - 25.0g HMX SDP	100008249
	Charge - 32.0g HMX DP	100005327
	Charge - 24.2g PYX SDP	100008015
	Charge - 32.0g PYX/BRX DP	100005323
	Charge - 32.6g HNS SDP	101282511
	Charge - 24.0g RDX SDP/LD	101293450
17	Charge Clip	100005336
18	End Seal	100005251
19	Charge Tube Centralizer	100014269

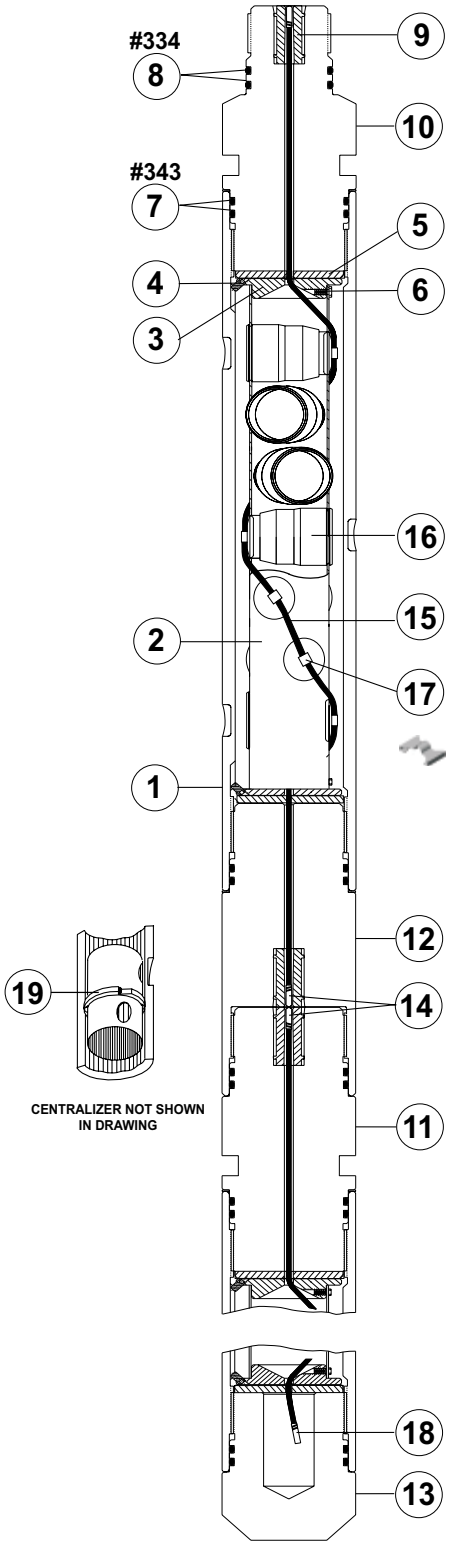

4 5/8-in. 6-spf 60° (6-spf Carrier) VannGun™ System

*Included in Shipping Assembly.

4 $^{5}/_{8}$-in. 6-spf 60° (6-spf Carrier) VannGun™ System

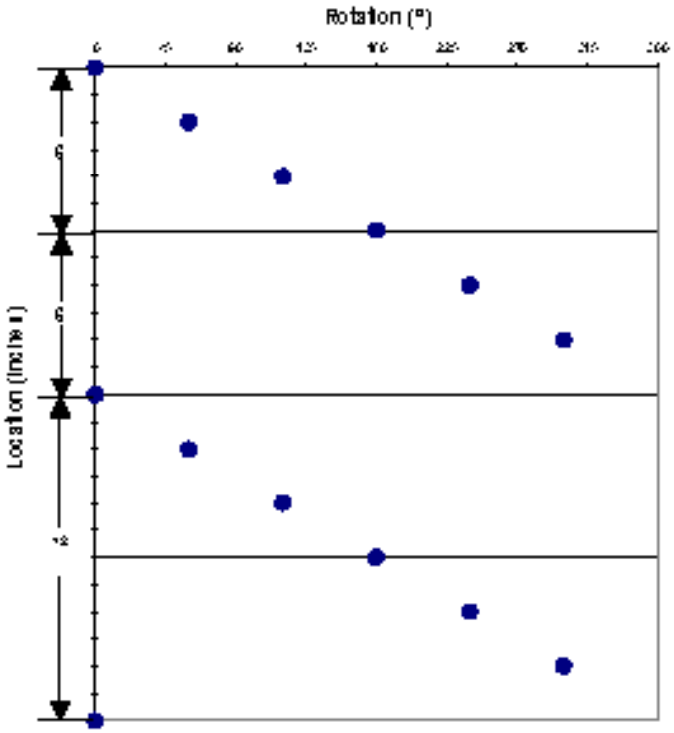

Shot Pattern for 4.625-in.
6-spf 60° Phasing

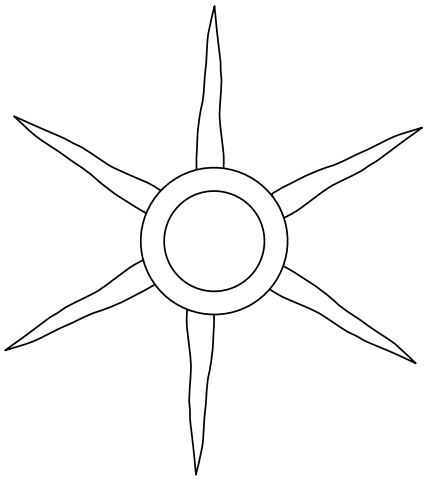

60° Phasing
6 Perforation Planes

VannGun™ Weights

Length ft (m)	4ft (1.22)	8 ft (2.44)	11 ft (3.35)	16 ft (4.88)	22 ft (6.71)
Loaded lb (kg)	82 (37)	165 (85)	227 (103)	331 (150)	455 (207)
Spacer lb (kg)	73 (33)	147 (67)	202 (91)	293 (133)	403 (183)

4 5/8-in. 6-spf 60° (12-spf Carrier) VannGun™ System

Item	Part No.	Description	Part No.
	Premium		Standard
	100005200	Shipping Assembly - 4 ft	101205515
	100007982	Shipping Assembly - 8 ft	100155806
	100007985	Shipping Assembly - 11 ft	101205514
	100007983	Shipping Assembly - 16 ft	100155805
	100014182	Shipping Assembly - 22 ft	100155804
*1	100156338	Gun, Scallop - 4 ft	100156376
	100156339	Gun, Scallop - 8 ft	100156382
	100014254	Gun, Scallop - 11 ft	100156378
	100014255	Gun, Scallop - 16 ft	100156377
	100156335	Gun, Scallop - 22 ft	100156375

Item	Description	Part No.
*2	Tube, Charge Holder - 4 ft	100156492
	Tube, Charge Holder - 8 ft	100156493
	Tube, Charge Holder - 11 ft	100156495
	Tube, Charge Holder - 16 ft	100014267
	Tube, Charge Holder - 22 ft	100156560
*3	Fixture, Alignment	100014268
*4	Screw, Set 0.25”-20 D x 0.75” L	100028806
*5	Charge Tube Cushion	100156401
*6	Screw, Hex Socket 0.25”-20 D x 0.50” L	100028225
7	O-Ring, Buna 90 Duro #343	100001972
	O-Ring, Viton 95 Duro #343	100009383
	O-Ring, Aflas 90 Duro #343	100157505
	O-Ring, Backup #343	100014417
8	O-Ring, Buna 90 Duro #334	100001963
	O-Ring, Viton 95 Duro #334	100009382
	O-Ring, Aflas 90 Duro #334	13416
	O-Ring, Backup #334	100005381
9	Insert, Alignment (PAI)	100005255
	Insert, Alignment (AAI)	100005222
10	Crossover, Firing Head	100005264
11	Tandem, Grooved	100005263
12	Crossover, Box x Pin	100005265
13	Bull Plug	100005266
14	Bi-Directional Booster	See Appendix A
15	Detonating Cord	See Appendix A
16	Charge - 24.0g RDX SDP	100008014
	Charge - 32.0g RDX DP	100005322
	Charge - 25.0g HMX ***Millennium***™	101233819
	Charge - 25.0g HMX SDP	100008249
	Charge - 32.0g HMX DP	100005327
	Charge - 24.2g PYX SDP	100008015
	Charge - 32.0g PYX/BRX DP	100005323
	Charge - 32.6g HNS SDP	101282511
	Charge - 24.0g RDX SDP/LD	101293450
17	Charge Clip	100005336
18	End Seal	100005251
19	Charge Tube Centralizer	100014269

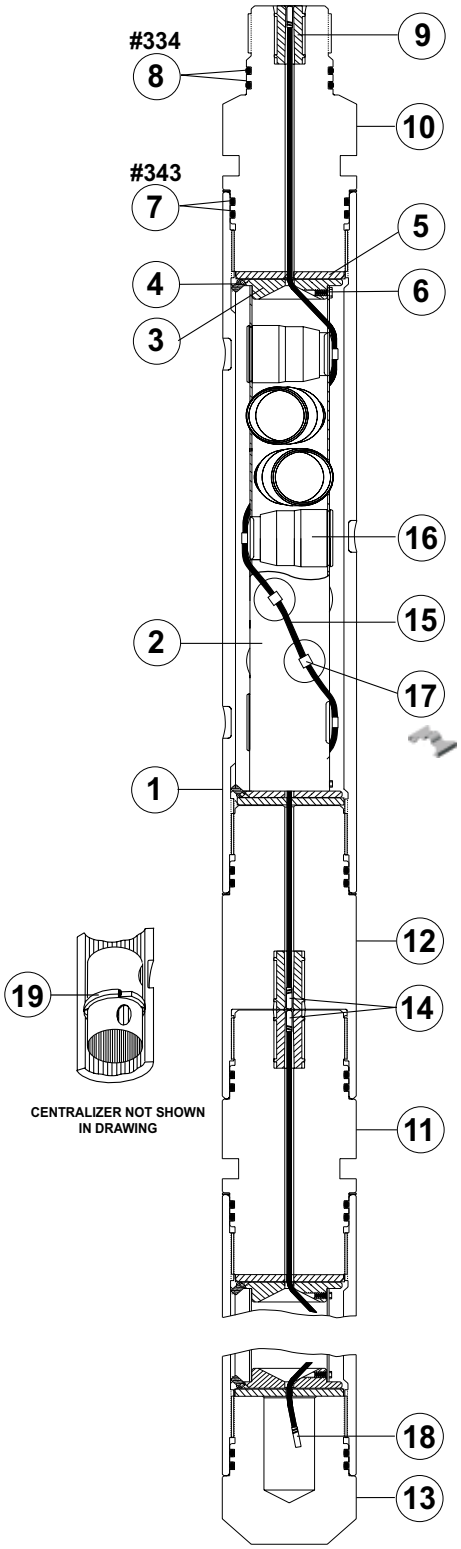

4 5/8-in. 6-spf 60°
(12-spf Carrier) VannGun™ System

*Included in Shipping Assembly.

4 $^5/_8$-in. 6-spf 60° (12-spf Carrier) VannGun™

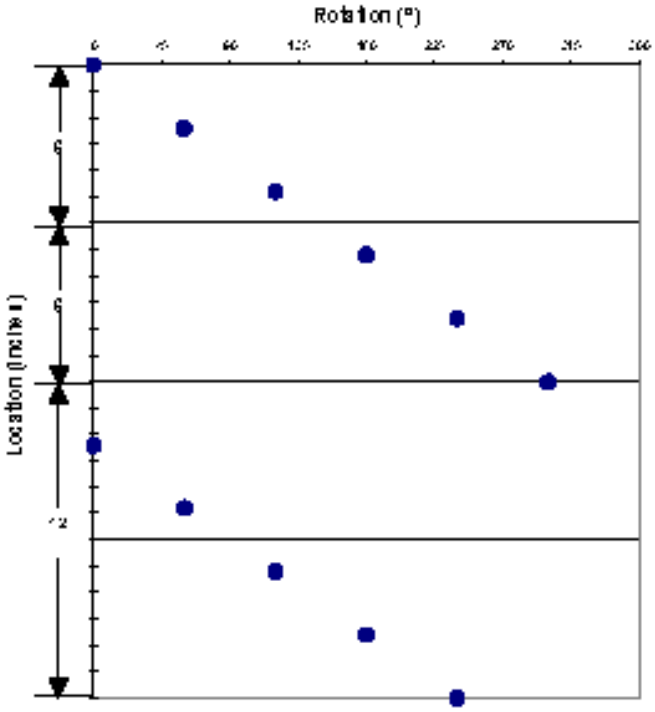

Shot Pattern for 4.625-in.
6-spf 60° Phasing

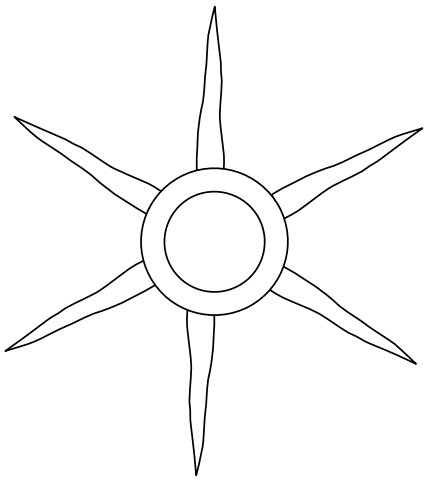

60° Phasing
6 Perforation Planes

VannGun™ Weights

Length ft (m)	4ft (1.22)	8 ft (2.44)	11 ft (3.35)	16 ft (4.88)	22 ft (6.71)
Loaded lb (kg)	82 (37)	165 (85)	227 (103)	331 (150)	455 (207)
Spacer lb (kg)	73 (33)	147 (67)	202 (91)	293 (133)	403 (183)

4 5/8-in. 8-spf 45°/135° SH VannGun™ System

Item	Part No.	Description	Part No.
	Premium		Standard
	101237924	Shipping Assembly - 4 ft	101228960
	101237926	Shipping Assembly - 8 ft	101228963
	N/A	Shipping Assembly - 11 ft	101228964
	100155840	Shipping Assembly - 16 ft	101228965
	100155841	Shipping Assembly - 22 ft	101228966
*1	101237924	Gun, Scallop - 4 ft	101228972
	101237926	Gun, Scallop - 8 ft	101228973
	N/A	Gun, Scallop - 11 ft	101228974
	100156336	Gun, Scallop - 16 ft	101228975
	100156337	Gun, Scallop - 22 ft	101228976

Item	Description	Part No.
*2	Tube, Charge Holder - 4 ft	100156415
	Tube, Charge Holder - 8 ft	100156416
	Tube, Charge Holder - 11 ft	101229264
	Tube, Charge Holder - 16 ft	100156417
	Tube, Charge Holder - 22 ft	100156418
*3	Fixture, Alignment	100156519
*4	Screw, Set 0.25”-20 D x 0.75” L	100028806
*5	Charge Tube Cushion	100156401
*6	Screw, Hex Socket 0.25”-20 D x 0.63” L	100028226
7	O-Ring, Buna 90 Duro #343	100001972
	O-Ring, Viton 95 Duro #343	100009383
	O-Ring, Aflas 90 Duro #343	100157505
	O-Ring, Backup #343	100014417
8	O-Ring, Buna 90 Duro #334	100001963
	O-Ring, Viton 95 Duro #334	100009382
	O-Ring, Aflas 90 Duro #334	13416
	O-Ring, Backup #334	100005381
9	Insert, Alignment (PAI)	100005255
	Insert, Alignment (AAI)	100005222
10	Crossover, Firing Head	100005264
11	Tandem, Grooved	100005263
12	Crossover, Box x Pin	100005265
13	Bull Plug	100005266
14	Bi-Directional Booster	See Appendix A
15	Detonating Cord	See Appendix A
16	Charge - 28.0g RDX SH	100005311
	Charge - 28.0g RDX SH/LD	101228756
	Charge - 28.0g HMX SH	100156995
	Charge - 28.0g HMX SH/LD	101233690
17	Charge Clip	100157866
18	End Seal	100005251

*Included in Shipping Assembly.

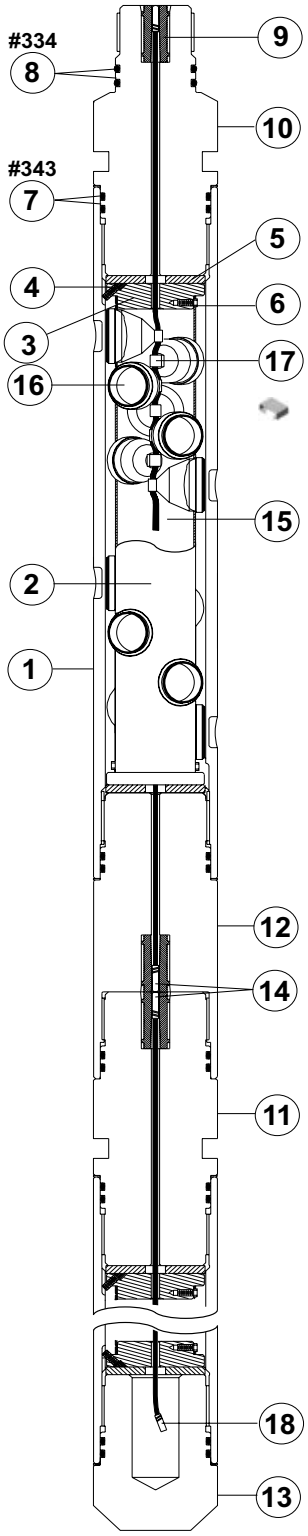

4 5/8-in. 8-spf 45°/135° SH VannGun™ System

4 $^{5}/_{8}$-in. 8-spf 45°/135° SH VannGun™ System

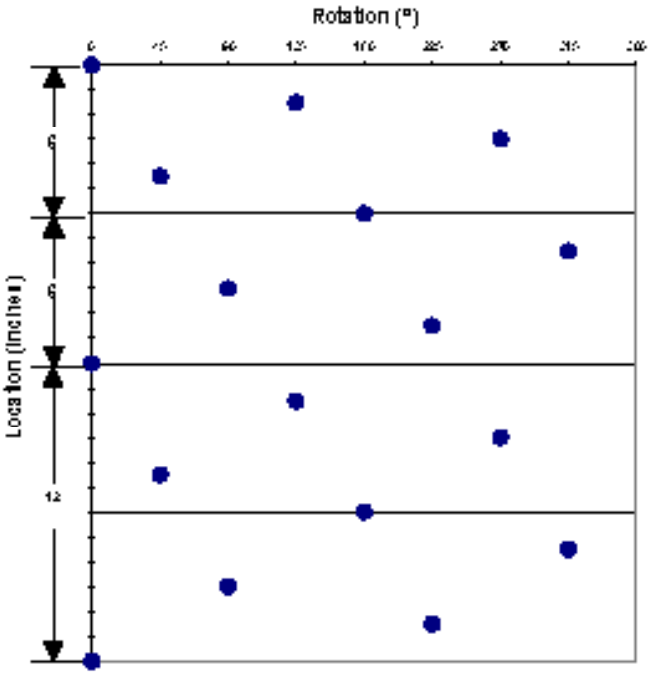

Shot Pattern for 4.625-in.
8-spf 45°/135° Phasing

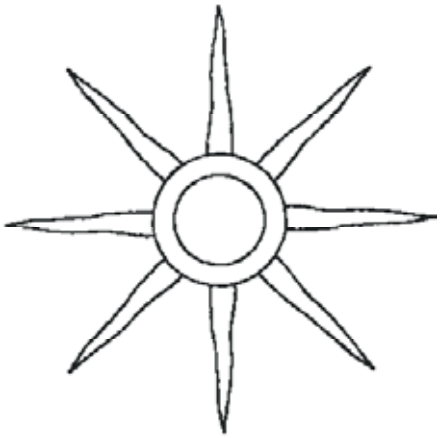

45°/135° Phasing
8 Perforation Planes

VannGun™ Weights

Length ft (m)	4ft (1.22)	8 ft (2.44)	11 ft (3.35)	16 ft (4.88)	22 ft (6.71)
Loaded lb (kg)	83 (38)	167 (76)	231 (105)	336 (153)	463 (210)
Spacer lb (kg)	73 (33)	146 (66)	201 (91)	292 (132)	401 (182)

4 5/8-in. 8-spf 180° VannGun™ System

Item	Part No.	Description	Part No.
	Premium		Standard
	101214389	Shipping Assembly - 4 ft	101214451
	101214396	Shipping Assembly - 8 ft	101214461
	101214398	Shipping Assembly - 11 ft	101214462
	121214402	Shipping Assembly - 16 ft	101214463
	101214403	Shipping Assembly - 22 ft	101214464
*1	100156350	Gun, Scallop - 4 ft	101214453
	100156351	Gun, Scallop - 8 ft	101214457
	100156352	Gun, Scallop - 11 ft	101214458
	100156353	Gun, Scallop - 16 ft	101214459
	101207606	Gun, Scallop - 22 ft	101214460

Item	Description	Part No.
*2	Tube, Charge Holder - 4 ft	101214363
	Tube, Charge Holder - 8 ft	101214364
	Tube, Charge Holder - 11 ft	101214365
	Tube, Charge Holder - 16 ft	101214366
	Tube, Charge Holder - 22 ft	101214367
*3	Fixture, Alignment	100156519
*4	Screw, Set 0.25”-20 D x 0.75” L	100028806
*5	Charge Tube Cushion	100156401
*6	Screw, Hex Socket 0.25”-20 D x 0.63” L	100028226
7	O-Ring, Buna 90 Duro #343	100001972
	O-Ring, Viton 95 Duro #343	100009383
	O-Ring, Aflas 90 Duro #343	100157505
	O-Ring, Backup #343	100014417
8	O-Ring, Buna 90 Duro #334	100001963
	O-Ring, Viton 95 Duro #334	100009382
	O-Ring, Aflas 90 Duro #334	13416
	O-Ring, Backup #334	100005381
9	Insert, Alignment (PAI)	100005255
	Insert, Alignment (AAI)	100005222
10	Crossover, Firing Head	100005264
11	Tandem, Grooved	100005263
12	Crossover, Box x Pin	100005265
13	Bull Plug	100005266
14	Bi-Directional Booster	See Appendix A
15	Detonating Cord	See Appendix A
16	Charge - 22.7g RDX DP	100005324
	Charge - 22.7g RDX DP/LD	100005325
	Charge - 25.0g RDX BH	100005319
	Charge - 22.7g RDX BH/LD	100005326
	Charge - 22.7g HMX ***Millennium***™	101210674
	Charge - 22.7g HMX DP	100014352
	Charge - 22.7g HMX DP/LD	100005340
	Charge - 25.0g HMX BH	100157006
	Charge - 22.7g HMX BH/LD	AR
	Charge - 26.0 PYX DP	AR
17	Charge Clip	100005250
18	End Seal	100005251

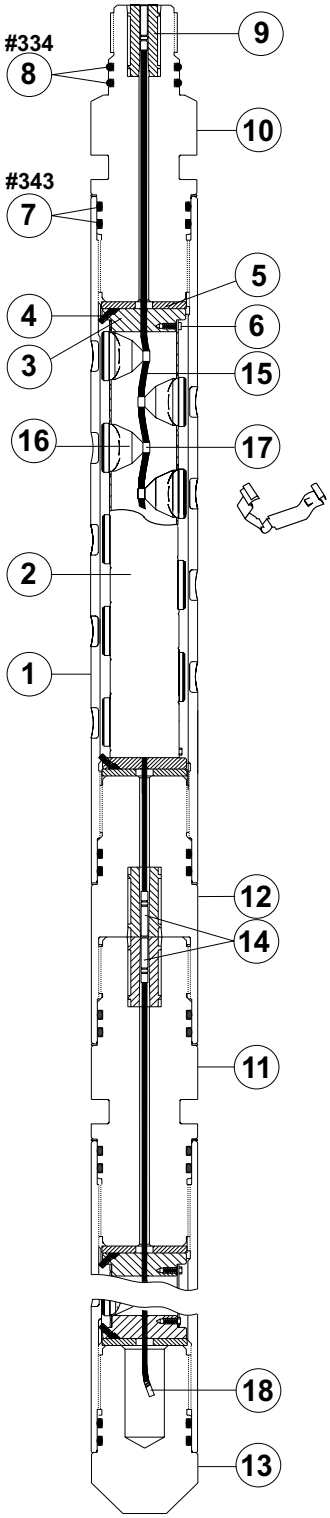

4 5/8-in. 8-spf 180° VannGun™ System

*Included in Shipping Assembly.
AR Available Upon Request.

4 $^{5}/_{8}$-in. 8-spf 180° VannGun™ System

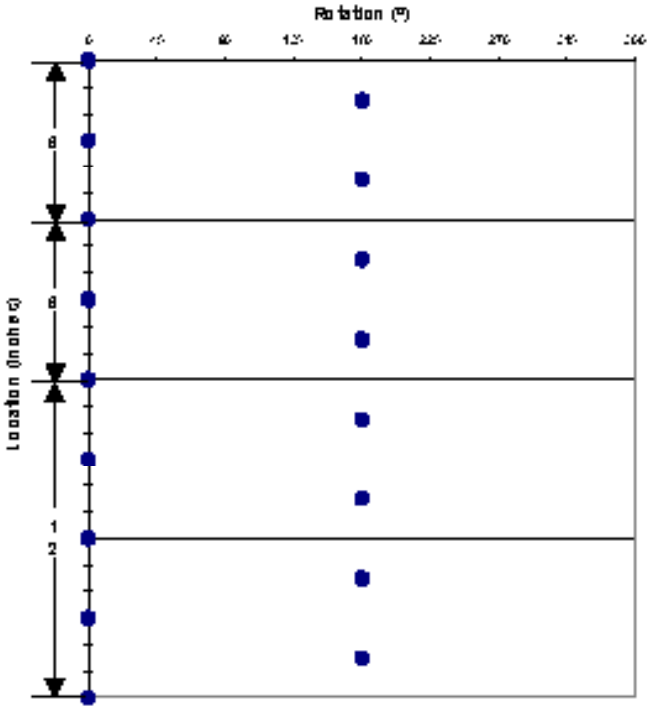

Shot Pattern for 4.625-in.
8-spf 180° Phasing

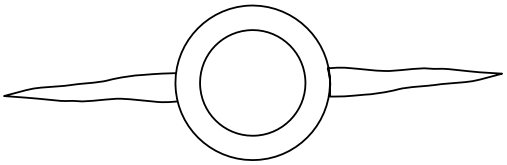

180° Phasing
2 Perforation Planes

VannGun™ Weights

Length ft (m)	4ft (1.22)	8 ft (2.44)	11 ft (3.35)	16 ft (4.88)	22 ft (6.71)
Loaded lb (kg)	83 (38)	167 (76)	231 (105)	336 (153)	463 (210)
Spacer lb (kg)	73 (33)	146 (66)	201 (91)	292 (132)	401 (182)

4 5/8-in. 8-spf 180° SH VannGun™ System

Item	Part No.	Description	Part No.
	Premium		Standard
	100155871	Shipping Assembly - 4 ft	101230387
	100155872	Shipping Assembly - 8 ft	101230388
	100155873	Shipping Assembly - 11 ft	101230389
	100155874	Shipping Assembly - 16 ft	101230390
	101207605	Shipping Assembly - 22 ft	101230392
*1	100156350	Gun, Scallop - 4 ft	101214453
	100156351	Gun, Scallop - 8 ft	101214457
	100156352	Gun, Scallop - 11 ft	101214458
	100156353	Gun, Scallop - 16 ft	101214459
	101207606	Gun, Scallop - 22 ft	101214460

Item	Description	Part No.
*2	Tube, Charge Holder - 4 ft	100156538
	Tube, Charge Holder - 8 ft	100156539
	Tube, Charge Holder - 11 ft	100156540
	Tube, Charge Holder - 16 ft	100156541
	Tube, Charge Holder - 22 ft	101207607
*3	Fixture, Alignment	100156519
*4	Screw, Set 0.25”-20 D x 0.75” L	100028806
*5	Charge Tube Cushion	100156401
*6	Screw, Hex Socket 0.25”-20 D x 0.63” L	100028226
7	O-Ring, Buna 90 Duro #343	100001972
	O-Ring, Viton 95 Duro #343	100009383
	O-Ring, Aflas 90 Duro #343	100157505
	O-Ring, Backup #343	100014417
8	O-Ring, Buna 90 Duro #334	100001963
	O-Ring, Viton 95 Duro #334	100009382
	O-Ring, Aflas 90 Duro #334	13416
	O-Ring, Backup #334	100005381
9	Insert, Alignment (PAI)	100005255
	Insert, Alignment (AAI)	100005222
10	Crossover, Firing Head	100005264
11	Tandem, Grooved	100005263
12	Crossover, Box x Pin	100005265
13	Bull Plug	100005266
14	Bi-Directional Booster	See Appendix A
15	Detonating Cord	See Appendix A
16	Charge - 28.0g RDX SH	100005311
	Charge - 28.0g RDX SH/LD	101228756
	Charge - 28.0g HMX SH	100156995
	Charge - 28.0g HMX SH/LD	101233690
17	Charge Clip	100157866
18	End Seal	100005251

*Included in Shipping Assembly.

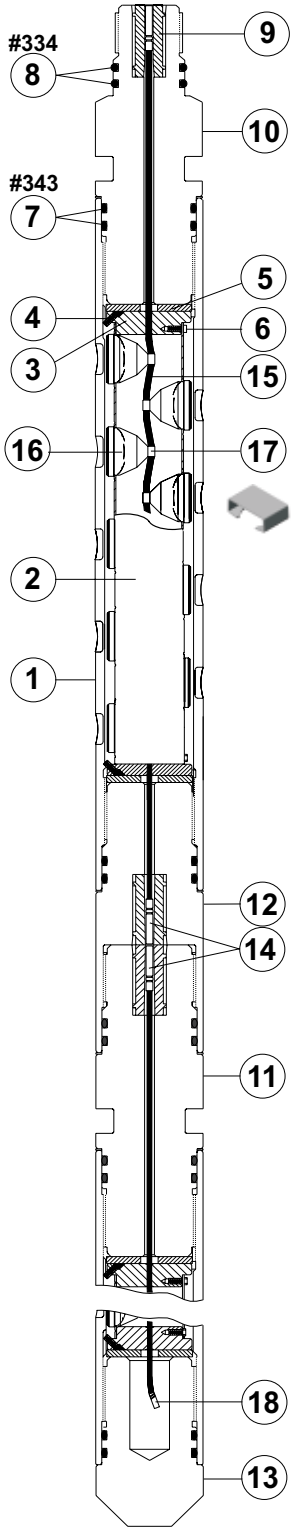

4 5/8-in. 8-spf 180° SH VannGun™ System

4 $^{5}/_{8}$-in. 8-spf 180° SH VannGun™ System

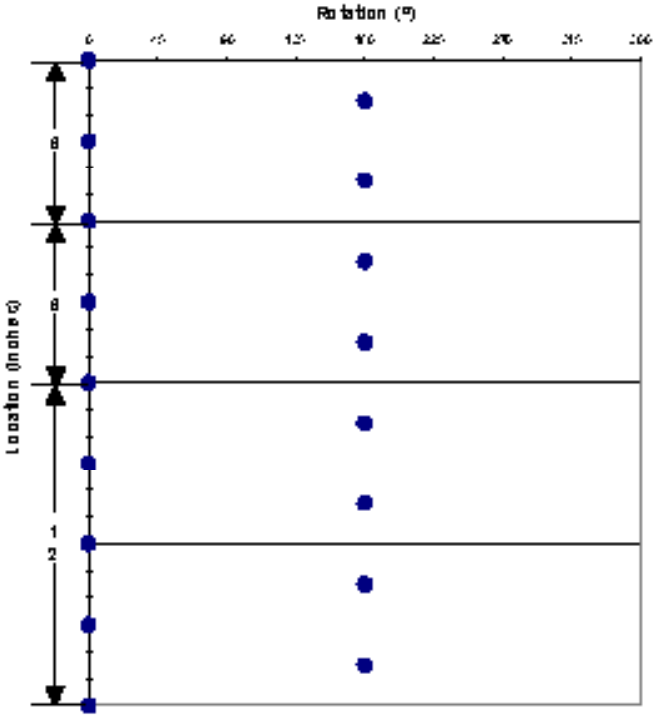

Shot Pattern for 4.625-in.
8-spf 180° Phasing

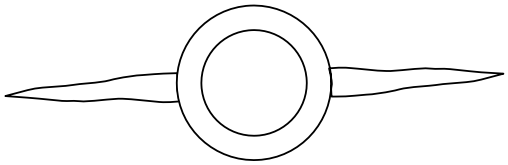

180° Phasing
2 Perforation Planes

VannGun™ Weights

Length ft (m)	4ft (1.22)	8 ft (2.44)	11 ft (3.35)	16 ft (4.88)	22 ft (6.71)
Loaded lb (kg)	83 (38)	167 (76)	231 (105)	336 (153)	463 (210)
Spacer lb (kg)	73 (33)	146 (66)	201 (91)	292 (132)	401 (182)

4 5/8-in. 11-spf 140°/160° Lowside VannGun™ System

Item	Part No.	Description	Part No.
	Premium		Standard
	101007654	Shipping Assembly - 4 ft	101215806
	101007655	Shipping Assembly - 8 ft	101215885
	N/A	Shipping Assembly - 11 ft	101215886
	100157484	Shipping Assembly - 16 ft	101215887
	101237887	Shipping Assembly - 22 ft	101215888
*1	101202154	Gun, Scallop - 4 ft	101215807
	101202155	Gun, Scallop - 8 ft	101215808
	N/A	Gun, Scallop - 11 ft	101215809
	100156349	Gun, Scallop - 16 ft	101215810
	101237885	Gun, Scallop - 22 ft	101215811

Item	Description	Part No.
*2	Tube, Charge Holder - 4 ft	101215859
	Tube, Charge Holder - 8 ft	101215861
	Tube, Charge Holder - 11 ft	101215862
	Tube, Charge Holder - 16 ft	101215863
	Tube, Charge Holder - 22 ft	101215866
*3	Fixture, Alignment	100156519
*4	Screw, Set 0.25”-20 D x 0.75” L	100028806
*5	Charge Tube Cushion	100156401
*6	Screw, Hex Socket 0.25”-20 D x 0.63” L	100028226
7	O-Ring, Buna 90 Duro #343	100001972
	O-Ring, Viton 95 Duro #343	100009383
	O-Ring, Aflas 90 Duro #343	100157505
	O-Ring, Backup #343	100014417
8	O-Ring, Buna 90 Duro #334	100001963
	O-Ring, Viton 95 Duro #334	100009382
	O-Ring, Aflas 90 Duro #334	13416
	O-Ring, Backup #334	100005381
9	Insert, Alignment (PAI)	100005255
	Insert, Alignment (AAI)	100005222
10	Crossover, Firing Head	100005264
11	Tandem, Grooved	100005263
12	Crossover, Box x Pin	100005265
13	Bull Plug	100005266
14	Bi-Directional Booster	See Appendix A
15	Detonating Cord	See Appendix A
16	Charge - 22.7g RDX DP	100005324
	Charge - 25.0g RDX BH	100005319
	Charge - 22.7g RDX BH/LD	100005326
	Charge - 22.7g HMX ***Millennium***™	101210674
	Charge - 22.7g HMX DP	100014352
	Charge - 25.0g HMX BH	100157006
	Charge - 22.7g HMX BH/LD	AR
	Charge - 26.0 PYX DP	AR
17	Charge Clip	100005250
18	End Seal	100005251

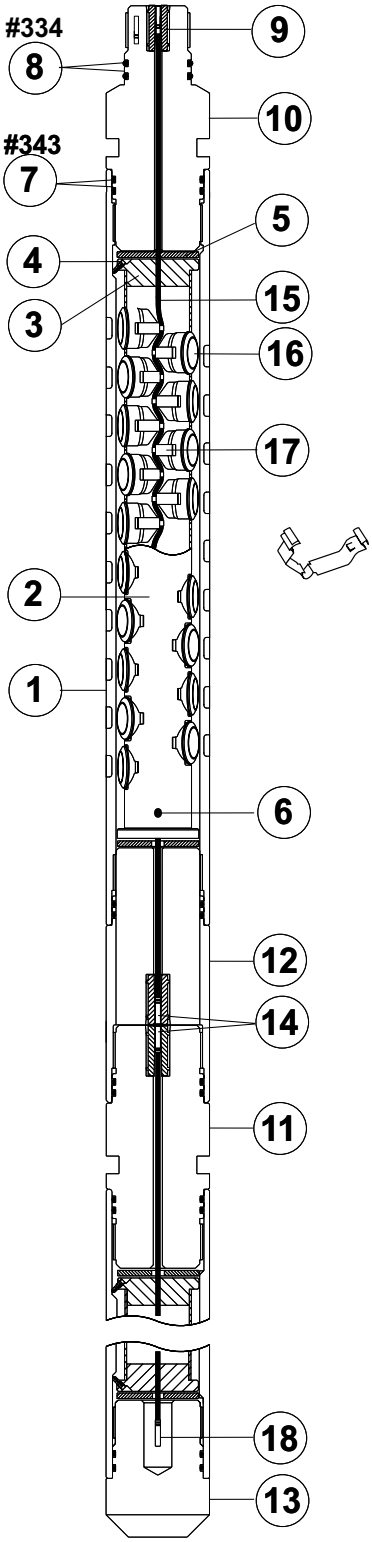

4 5/8-in. 11-spf 140°/160° Lowside VannGun™ System

*Included in Shipping Assembly.
AR Available Upon Request.

4 $^{5}/_{8}$-in. 11-spf 140°/160° Lowside VannGun™ System

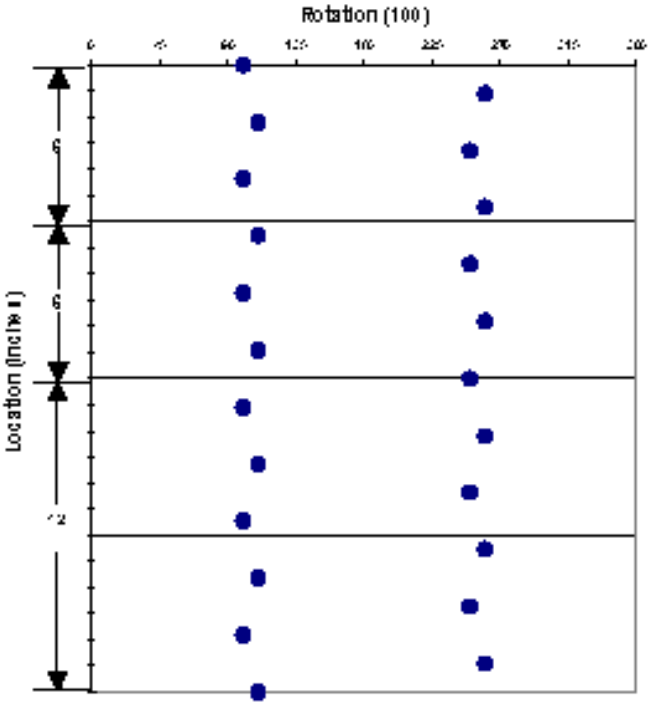

Shot Pattern for 4.625-in.
11-spf 140°/160° Phasing

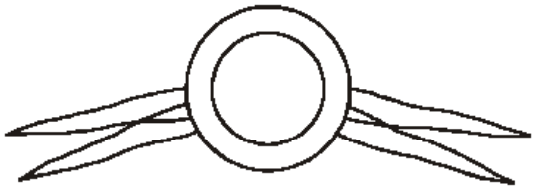

140°/160° Phasing
4 Perforation Planes
Lowside

VannGun™ Weights

Length ft (m)	4ft (1.22)	8 ft (2.44)	11 ft (3.35)	16 ft (4.88)	22 ft (6.71)
Loaded lb (kg)	83 (37)	168 (76)	232 (105)	339 (154)	407 (212)
Spacer lb (kg)	71 (32)	142 (65)	196 (89)	285 (129)	391 (178)

5-in. 12-spf OMNI™ SH VannGun™ System

Item	Part No.	Description	Part No.
	Premium		Standard
	101245307	Shipping Assembly - 4 ft	N/A
	101245308	Shipping Assembly - 8 ft	
	101245309	Shipping Assembly - 11 ft	
	101245310	Shipping Assembly - 16 ft	
	101245311	Shipping Assembly - 22 ft	

*1	101245276	Gun, Scallop - 4 ft	N/A
	101245277	Gun, Scallop - 8 ft	
	101245278	Gun, Scallop - 11 ft	
	101245279	Gun, Scallop - 16 ft	
	101245280	Gun, Scallop - 22 ft	

Item	Description	Part No.
*2	Tube, Charge Holder - 4 ft	101271162
	Tube, Charge Holder - 8 ft	101271164
	Tube, Charge Holder - 11 ft	101271165
	Tube, Charge Holder - 16 ft	101271166
	Tube, Charge Holder - 22 ft	101271167
*3	Fixture, Alignment	101245739
*4	Screw, Set 0.25”-20 D x 0.75” L	100028806
*5	Charge Tube Cushion	100156397
*6	Screw, Hex Socket 0.25”-20 D x 0.63” L	100028226
7	O-Ring, Buna 90 Duro #346	100001971
	O-Ring, Viton 95 Duro #346	100064845
	O-Ring, Aflas 90 Duro #346	101284368
	O-Ring, Backup #346	100157468
8	O-Ring, Buna 90 Duro #334	100001963
	O-Ring, Viton 95 Duro #334	100009382
	O-Ring, Aflas 90 Duro #334	13416
	O-Ring, Backup #334	100005381
9	Insert, Alignment (PAI)	100005255
	Insert, Alignment (AAI)	100005222
10	Crossover, Firing Head	101245302
11	Tandem, Grooved	101245299
12	Crossover, Box x Pin	101245301
13	Bull Plug	101245300
14	Bi-Directional Booster	See Appendix A
15	Detonating Cord	See Appendix A
16	Charge - 28.0g RDX SH	100005311
	Charge - 28.0g RDX SH/LD	101228756
	Charge - 28.0g HMX SH	100156995
	Charge - 28.0g HMX SH/LD	101233690
17	Charge Clip	100157866
18	End Seal	100005251

* Included in Shipping Assembly.

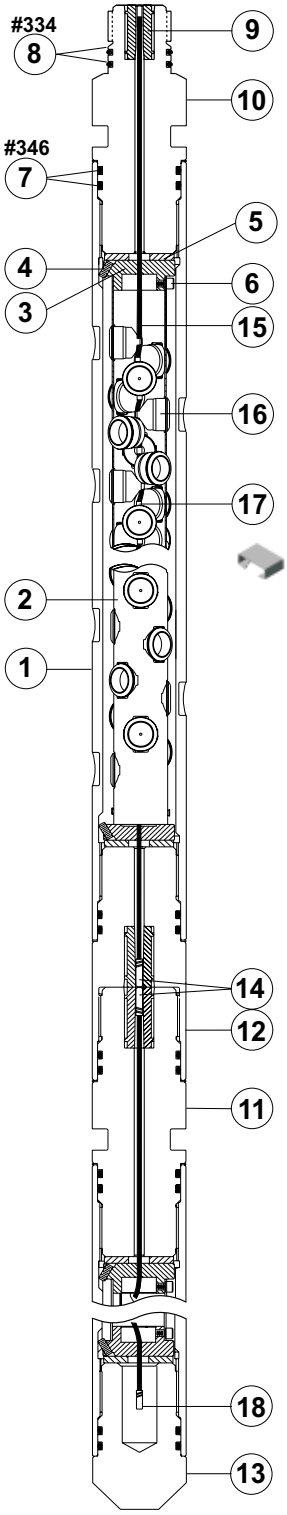

5 -in. 12-spf OMNI™ SH VannGun™ System

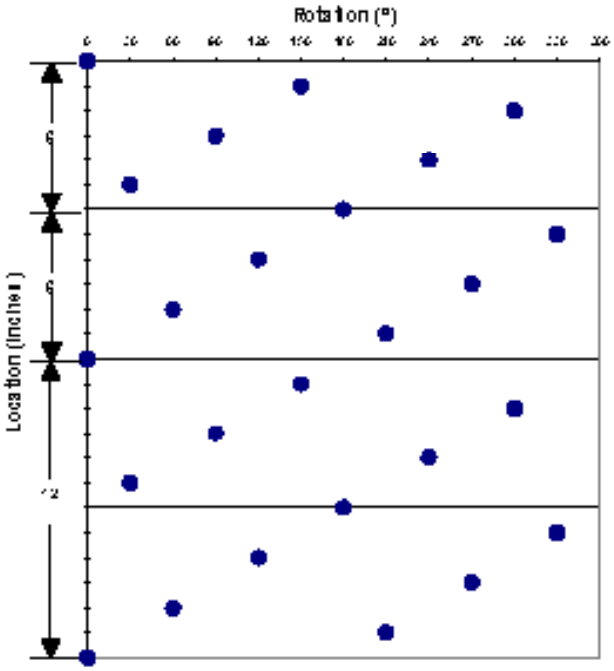

Shot Pattern for 5-in. 12-spf 30°/150° Phasing

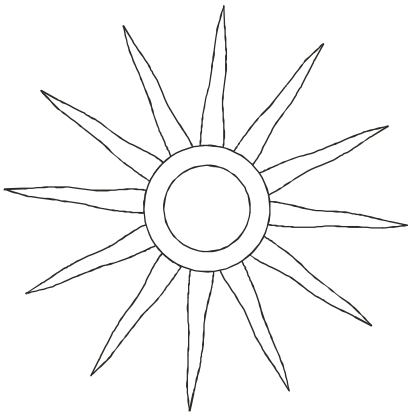

30°/150° Phasing
12 Perforation Planes

VannGun™ Weights

Length ft (m)	4ft (1.22)	8 ft (2.44)	11 ft (3.35)	16 ft (4.88)	22 ft (6.71)
Loaded lb (kg)	101 (46)	206 (93)	285 (129)	416 (189)	575 (260)
Spacer lb (kg)	78 (35)	156 (71)	214 (97)	311 (141)	428 (194)

5-in. 12-spf 25.7°/128.5° SH VannGun™ System

Item	Part No.	Description	Part No.
	Premium		Standard
	101245742	Shipping Assembly - 4 ft	N/A
	101245744	Shipping Assembly - 8 ft	
	101245745	Shipping Assembly - 11 ft	
	101245746	Shipping Assembly - 16 ft	
	101245747	Shipping Assembly - 22 ft	
*1	101245692	Gun, Scallop - 4 ft	N/A
	101245693	Gun, Scallop - 8 ft	
	101245694	Gun, Scallop - 11 ft	
	101245695	Gun, Scallop - 16 ft	
	101245696	Gun, Scallop - 22 ft	

Item	Description	Part No.
*2	Tube, Charge Holder - 4 ft	101271777
	Tube, Charge Holder - 8 ft	101271785
	Tube, Charge Holder - 11 ft	101271786
	Tube, Charge Holder - 16 ft	101271787
	Tube, Charge Holder - 22 ft	101271788
*3	Fixture, Alignment	101245739
*4	Screw, Set 0.25”-20 D x 0.75” L	100028806
*5	Charge Tube Cushion	100156397
*6	Screw, Hex Socket 0.25”-20 D x 0.63” L	100028226
7	O-Ring, Buna 90 Duro #346	100001971
	O-Ring, Viton 95 Duro #346	100064845
	O-Ring, Aflas 90 Duro #346	101284368
	O-Ring, Backup #346	100157468
8	O-Ring, Buna 90 Duro #334	100001963
	O-Ring, Viton 95 Duro #334	100009382
	O-Ring, Aflas 90 Duro #334	13416
	O-Ring, Backup #334	100005381
9	Insert, Alignment (PAI)	100005255
	Insert, Alignment (AAI)	100005222
10	Crossover, Firing Head	101245302
11	Tandem, Grooved	101245299
12	Crossover, Box x Pin	101245301
13	Bull Plug	101245300
14	Bi-Directional Booster	See Appendix A
15	Detonating Cord	See Appendix A
16	Charge - 28.0 g RDX SH	100005311
	Charge - 28.0 g RDX SH/LD	101228756
	Charge - 28.0 g HMX SH	100156995
	Charge - 28.0 g HMX SH/LD	101233690
17	Charge Clip	100157866
18	End Seal	100005251

*Included in Shipping Assembly.

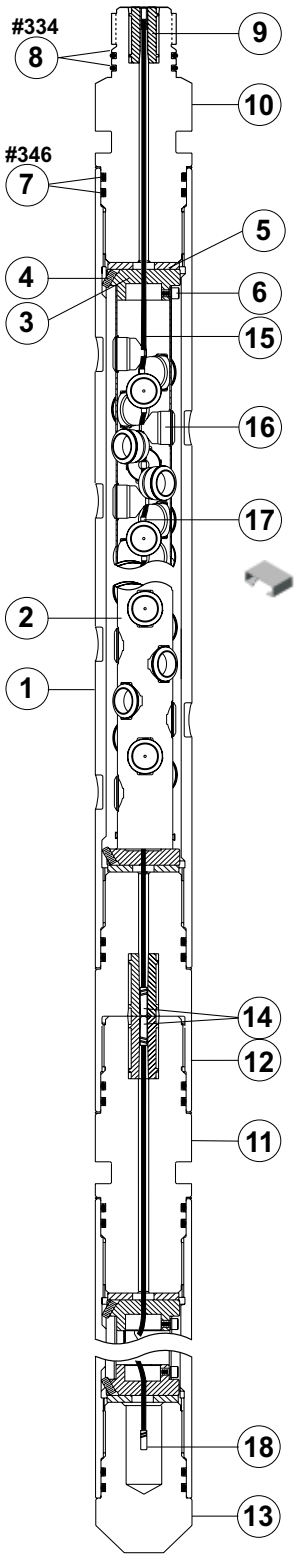

5-in. 12-spf 25.7°/128.5° SH VannGun™ System

5-in. 12-spf 25.7°/128.5° SH VannGun™ System

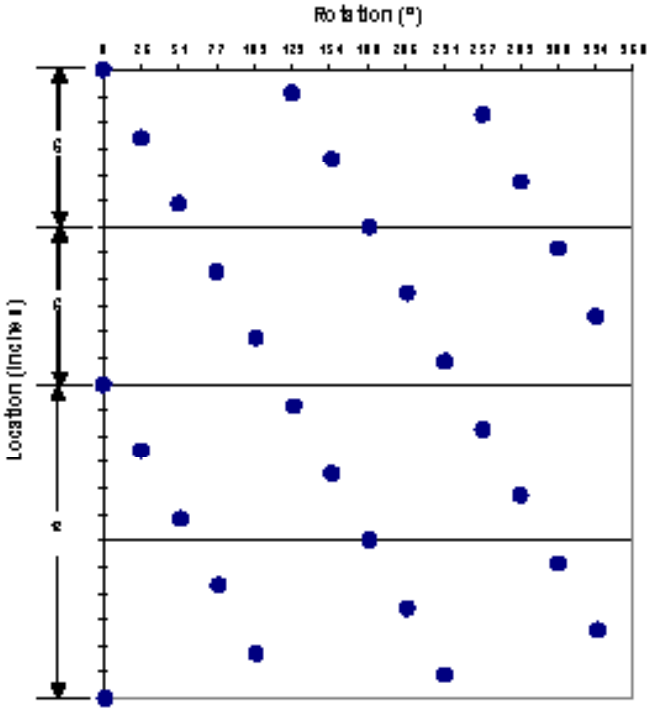

Shot Pattern for 5-in.
14-spf 25.7°/128.5° Phasing

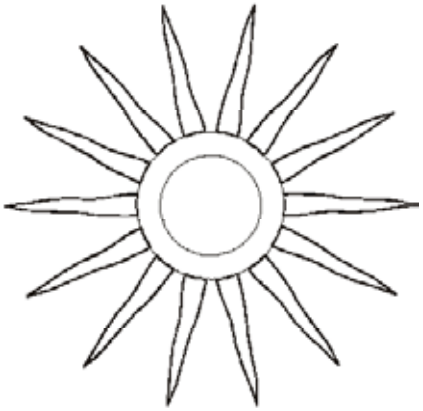

25.7°/128.5° Phasing
14 Perforation Planes

VannGun® Weights

Length ft (m)	4ft (1.22)	8 ft (2.44)	11 ft (3.35)	16 ft (4.88)	22 ft (6.71)
Loaded lb (kg)	103 (47)	212 (96)	293 (133)	430 (195)	593 (269)
Spacer lb (kg)	78 (35)	156 (71)	214 (97)	312 (141)	429 (194)

5-in. 12-spf 45°/135° *MIRAGE™* SH VannGun® System

Item	Part No.	Description	Part No.
	Premium		Standard
	101299819	Shipping Assembly - 4 ft	N/A
	101299821	Shipping Assembly - 8 ft	
	101299822	Shipping Assembly - 11 ft	
	101299823	Shipping Assembly - 16 ft	
	101299824	Shipping Assembly - 22 ft	

*1	101299809	Carrier - 4 ft	N/A
	101299810	Carrier - 8 ft	
	101299811	Carrier - 11 ft	
	101299812	Carrier - 16 ft	
	101299813	Carrier - 22 ft	

Item	Description	Part No.
*2	Tube, Charge Holder - 4ft	101299837
	Tube, Charge Holder - 8ft	101299838
	Tube, Charge Holder - 11ft	101299839
	Tube, Charge Holder - 16ft	101299840
	Tube, Charge Holder - 22ft	101299841
*3	Fixture, Alignment	101324177
*4	Screw, Set 0.25”-20 D x 0.75” L	100028806
*5	Charge Tube Cushion	100156397
*6	Screw, Hex Socket 0.25”-20 D x 0.63” L	100028226
7	O-Ring, Buna 90 Duro #346	100001971
	O-Ring, Viton 95 Duro #346	100064845
	O-Ring, Aflas 90 Duro #346	101284368
	O-Ring, Backup #346	100157468
8	O-Ring, Buna 90 Duro #334	100001963
	O-Ring, Viton 95 Duro #334	100009382
	O-Ring, Aflas 90 Duro #334	13416
	O-Ring, Backup #334	100008027
9	PAI - Polymer Alignment Insert	100005255
	AAI-Aluminum Alignment Insert	100005222
10	3.375 Pin grooved FH Crossover	101245302
11	Tandem, Grooved	101245299
12	Crossover, Box x Pin	101245301
13	Bull Plug	101245300
14	Bi-Directional Booster	160251
15	Detonating Cord	100157035
16	22 gram RDX MIRAGE™ SH Charge	101307494
17	Charge Clip	100157866
18	End Seal	100005251

*Included in Shipping Assembly.

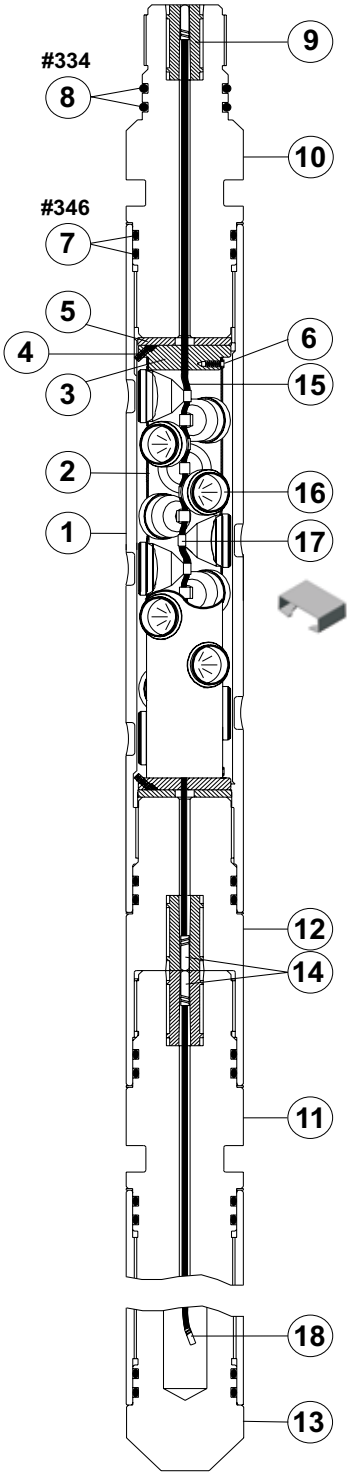

5-in. 12-spf 45°/135° MIRAGE™ SH VannGun® System

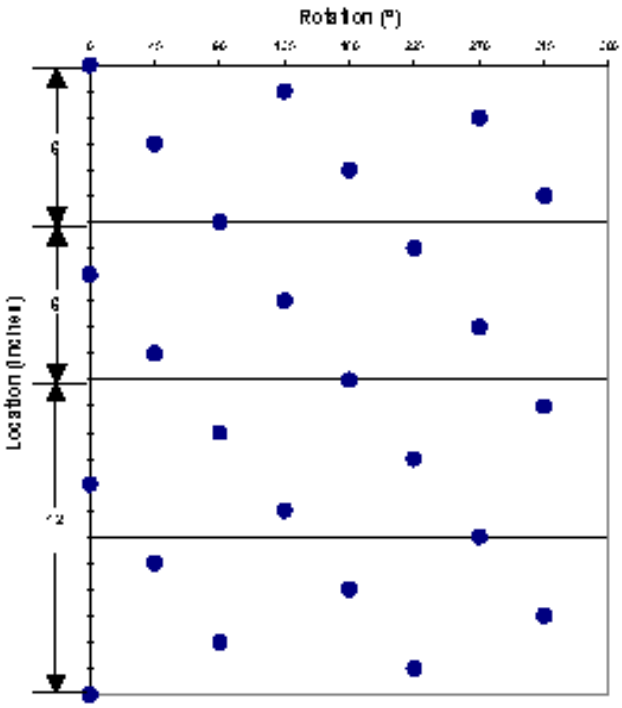

Shot Pattern for 5-in.
12-spf 45°/135° Phasing

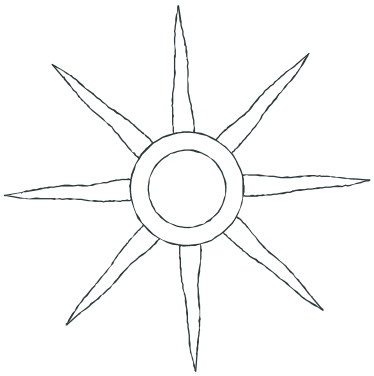

45°/135° Phasing
8 Perforation Planes

VannGun® Weights

Length ft (m)	4ft	8 ft	16 ft
Loaded lb (kg)	147	303	613
Spacer lb (kg)	114	228	456

5-in.15-spf 3/Plane SH VannGun™ System

Item	Part No.	Description	Part No.
	Premium		Standard
	101269775	Shipping Assembly - 4 ft	N/A
	101269776	Shipping Assembly - 8 ft	
	101269777	Shipping Assembly - 11 ft	
	101269778	Shipping Assembly - 16 ft	
	101269779	Shipping Assembly - 22 ft	
*1	101269762	Gun, Scallop - 4 ft	N/A
	101269765	Gun, Scallop - 8 ft	
	101269766	Gun, Scallop - 11 ft	
	101269767	Gun, Scallop - 16 ft	
	101269768	Gun, Scallop - 22 ft	

Item	Description	Part No.
*2	Tube, Charge Holder - 4 ft	101269770
	Tube, Charge Holder - 8 ft	101269771
	Tube, Charge Holder - 11 ft	101269772
	Tube, Charge Holder - 16 ft	101269773
	Tube, Charge Holder - 22 ft	101269774
*3	Fixture, Alignment	101245296
*4	Screw, Set 0.25”-20 D x 0.75” L	100028806
*5	Charge Tube Cushion	100156397
*6	Screw, Hex Socket 0.25”-20 D x 0.63” L	100028226
7	O-Ring, Buna 90 Duro #346	100001971
	O-Ring, Viton 95 Duro #346	100064845
	O-Ring, Aflas 90 Duro #346	101284368
	O-Ring, Backup #346	100157468
8	O-Ring, Buna 90 Duro #334	100001963
	O-Ring, Viton 95 Duro #334	100009382
	O-Ring, Aflas 90 Duro #334	13416
	O-Ring, Backup #334	100005381
9	Insert, Alignment (PAI)	100005255
	Insert, Alignment (AAI)	100005222
10	Crossover, Firing Head	101245302
11	Tandem, Grooved	101245299
12	Crossover, Box x Pin	101245301
13	Bull Plug	101245300
14	Bi-Directional Booster	See Appendix A
15	Detonating Cord	See Appendix A
16	Charge - 28.0g RDX SH	101269719
17	Charge Clip	N/A
18	End Seal	100005251

*Included in Shipping Assembly.

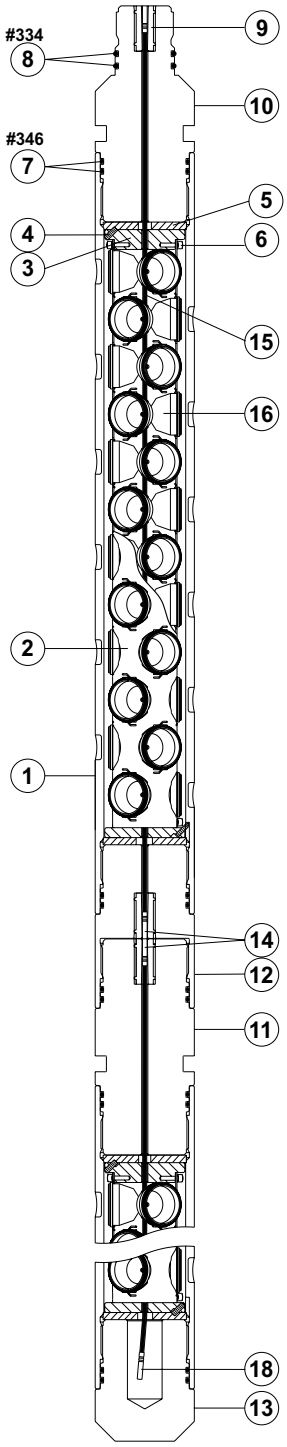

5-in. 15-spf
3/Plane SH VannGun™ System

5-in. 15-spf 3/Plane SH VannGun™ System

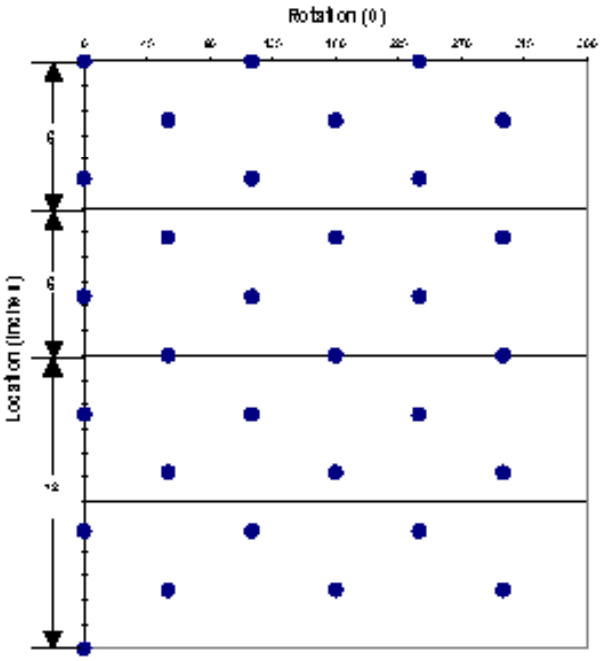

Shot Pattern for 5-in.
15-spf 60°/120° Phasing

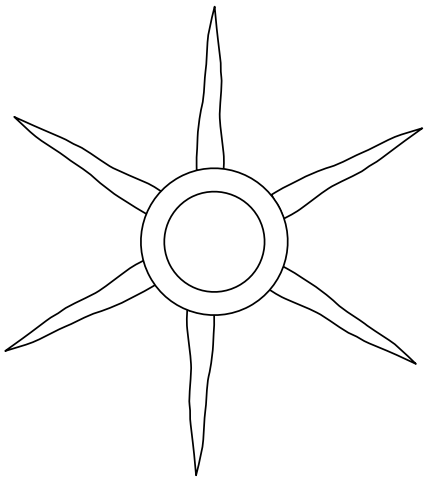

60°/120° Phasing
6 Perforation Planes

VannGun™ Weights

Length ft (m)	4ft (1.22)	8 ft (2.44)	11 ft (3.35)	16 ft (4.88)	22 ft (6.71)
Loaded lb (kg)	105 (51)	216 (98)	299 (136)	437 (198)	602 (273)
Spacer lb (kg)	78 (35)	156 (71)	214 (97)	312 (141)	429 (194)

5-in. 18-spf 3/Plane SH VannGun™ System

Item	Part No.	Description	Part No.
	Premium		Standard
	101269695	Shipping Assembly - 4 ft	N/A
	101269707	Shipping Assembly - 8 ft	
	101269708	Shipping Assembly - 11 ft	
	101269710	Shipping Assembly - 16 ft	
	101269714	Shipping Assembly - 22 ft	
*1	101245755	Gun, Scallop - 4 ft	N/A
	101245758	Gun, Scallop - 8 ft	
	101245760	Gun, Scallop - 11 ft	
	101245762	Gun, Scallop - 16 ft	
	101245763	Gun, Scallop - 22 ft	

Item	Description	Part No.
*2	Tube, Charge Holder - 4 ft	101245774
	Tube, Charge Holder - 8 ft	101245775
	Tube, Charge Holder - 11 ft	101245776
	Tube, Charge Holder - 16 ft	101245777
	Tube, Charge Holder - 22 ft	101245778
*3	Fixture, Alignment	101245296
*4	Screw, Set 0.25”-20 D x 0.75” L	100028806
*5	Charge Tube Cushion	100156397
*6	Screw, Hex Socket 0.25”-20 D x 0.63” L	100028226
7	O-Ring, Buna 90 Duro #346	100001971
	O-Ring, Viton 95 Duro #346	100064845
	O-Ring, Aflas 90 Duro #346	101284368
	O-Ring, Backup #346	100157468
8	O-Ring, Buna 90 Duro #334	100001963
	O-Ring, Viton 95 Duro #334	100009382
	O-Ring, Aflas 90 Duro #334	13416
	O-Ring, Backup #334	100005381
9	Insert, Alignment (PAI)	100005255
	Insert, Alignment (AAI)	100005222
10	Crossover, Firing Head	101245302
11	Tandem, Grooved	101245299
12	Crossover, Box x Pin	101245301
13	Bull Plug	101245300
14	Bi-Directional Booster	See Appendix A
15	Detonating Cord	See Appendix A
16	Charge - 28.0g RDX SH	101268719
	Charge - 28.0g HMX SH	AR
17	Charge Clip	N/A
18	End Seal	100005251

*Included in Shipping Assembly.
AR Available Upon Request.

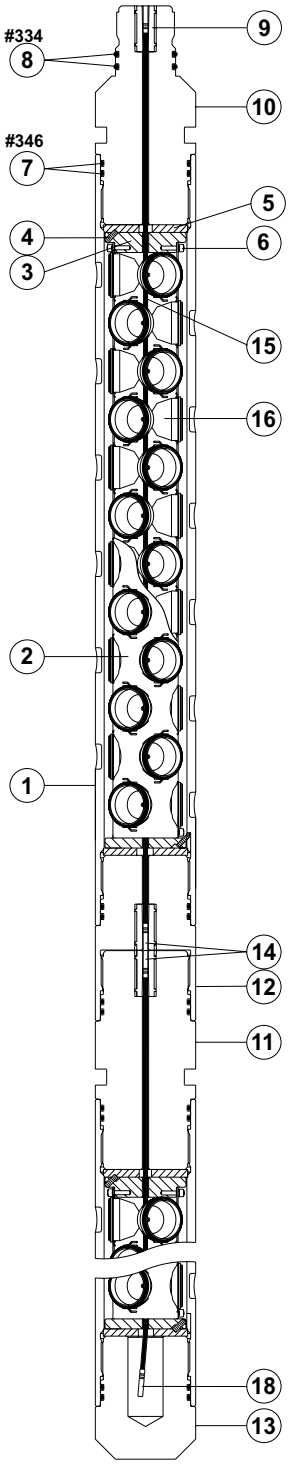

5-in. 18-spf 3/Plane SH VannGun™ System

5-in. 18-spf 3/Plane SH VannGun™ System

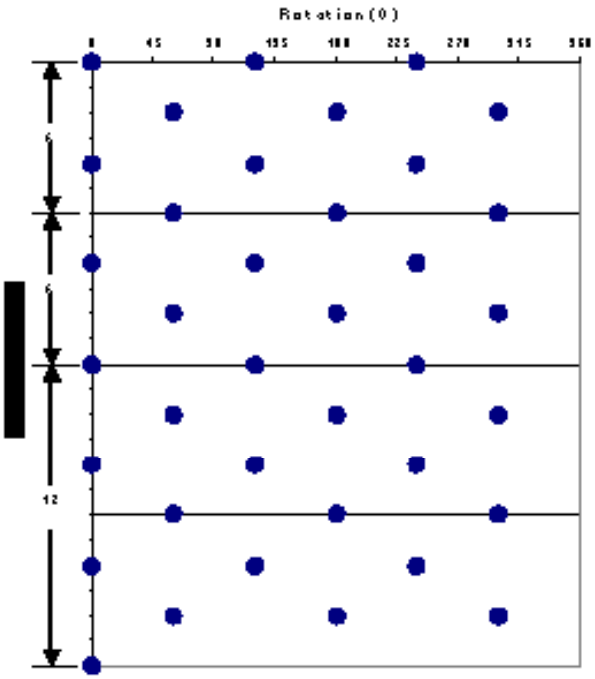

Shot Pattern for 5-in.
18-spf 60°/120° Phasing

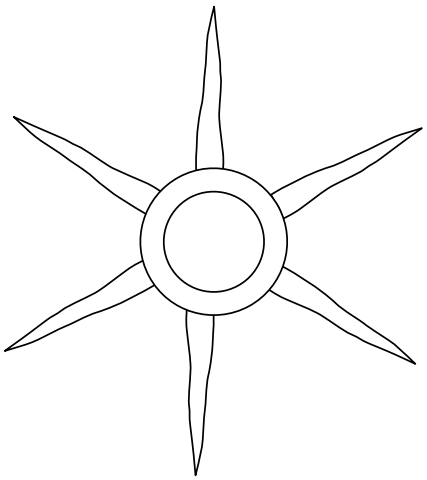

60°/120° Phasing
6 Perforation Planes

VannGun™ Weights

Length ft (m)	4ft (1.22)	8 ft (2.44)	11 ft (3.35)	16 ft (4.88)	22 ft (6.71)
Loaded lb (kg)	106 (48)	222 (101)	309 (140)	453 (206)	626 (284)
Spacer lb (kg)	78 (35)	156 (71)	214 (97)	312 (141)	429 (194)

5 1/8-in. 6-spf 135° SH VannGun™ System

Item	Part No.	Description	Part No.
	Premium		Standard
	101238092	Shipping Assembly - 4 ft	N/A
	101238093	Shipping Assembly - 8 ft	
	101238094	Shipping Assembly - 11 ft	
	101238095	Shipping Assembly - 16 ft	
	101238096	Shipping Assembly - 22 ft	
*1	101238055	Gun, Scallop - 4 ft	N/A
	101238056	Gun, Scallop - 8 ft	
	101238058	Gun, Scallop - 11 ft	
	101238059	Gun, Scallop - 16 ft	
	101238061	Gun, Scallop - 22 ft	

Item	Description	Part No.
*2	Tube, Charge Holder - 4 ft	101238067
	Tube, Charge Holder - 8 ft	101238085
	Tube, Charge Holder - 11 ft	101238086
	Tube, Charge Holder - 16 ft	101238087
	Tube, Charge Holder - 22 ft	101238088
*3	Fixture, Alignment	101238090
*4	Screw, Set 0.25”-20 D x 0.75” L	100028806
*5	Charge Tube Cushion	100156397
*6	Screw, Hex Socket 0.25”-20 D x 0.63” L	100028226
7	O-Ring, Buna 90 Duro #346	100001971
	O-Ring, Viton 95 Duro #346	100064845
	O-Ring, Aflas 90 Duro #346	101284368
	O-Ring, Backup #346	100157468
8	O-Ring, Buna 90 Duro #334	100001963
	O-Ring, Viton 95 Duro #334	100009382
	O-Ring, Aflas 90 Duro #334	13416
	O-Ring, Backup #334	100005381
9	Insert, Alignment (PAI)	100005255
	Insert, Alignment (AAI)	100005222
10	Crossover, Firing Head	100156632
11	Tandem, Grooved	100156629
12	Crossover, Box x Pin	100156630
13	Bull Plug	100156631
14	Bi-Directional Booster	See Appendix A
15	Detonating Cord	See Appendix A
16	Charge - 56.5g RDX SH	101240223
	Charge - 56.5g HMX SH	AR
17	Charge Clip	100157866
18	End Seal	100005251

*Included in Shipping Assembly.
AR Available Upon Request.

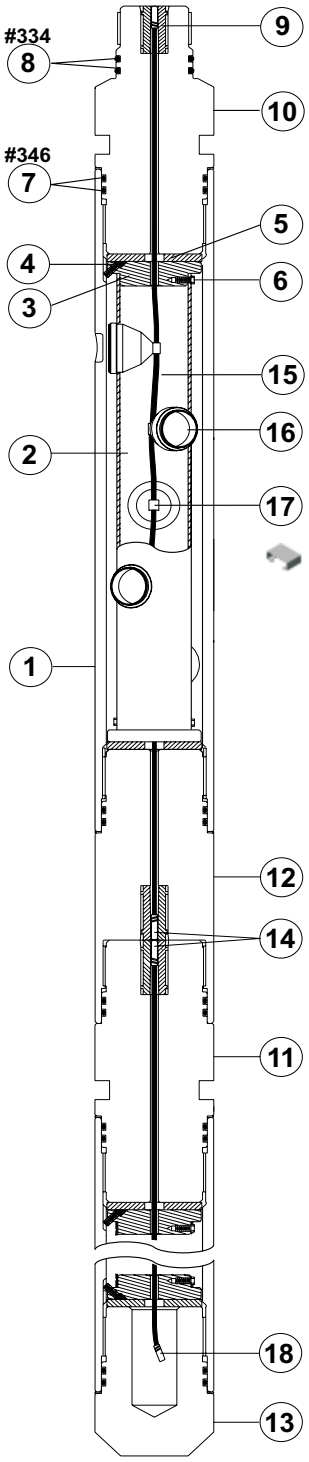

5 1/8-in. 6-spf 135° SH VannGun™ System

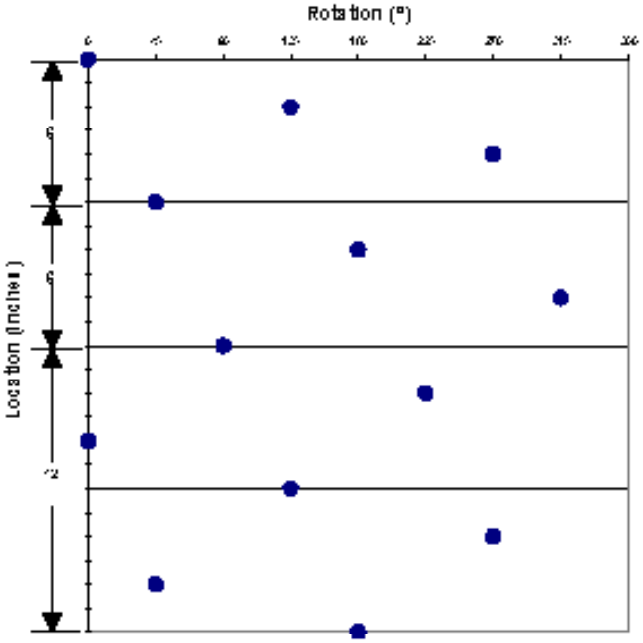

Shot Pattern for 5.125-in. 6-spf 135° Phasing

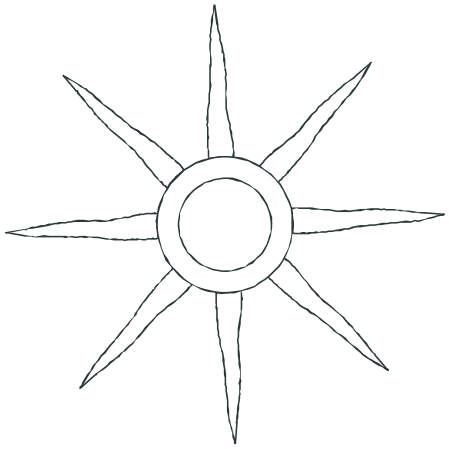

135° Phasing
8 Perforation Planes

VannGun™ Weights

Length ft (m)	4ft (1.22)	8 ft (2.44)	11 ft (3.35)	16 ft (4.88)	22 ft (6.71)
Loaded lb (kg)	111 (50)	229 (104)	317 (144)	465 (211)	641 (291)
Spacer lb (kg)	84 (38)	168 (76)	231 (105)	336 (152)	462 (209)

5 1/8-in. 12-spf OMNI™ VannGun™ System

Item	Part No.	Description	Part No.
	Premium		Standard
	100155880	Shipping Assembly - 4 ft	N/A
	100155881	Shipping Assembly - 8 ft	
	100155882	Shipping Assembly - 11 ft	
	100122883	Shipping Assembly - 16 ft	
	100155884	Shipping Assembly - 22 ft	
*1	100156367	Gun, Scallop - 4 ft	N/A
	100156368	Gun, Scallop - 8 ft	
	100156369	Gun, Scallop - 11 ft	
	100156370	Gun, Scallop - 16 ft	
	100156371	Gun, Scallop - 22 ft	

Item	Description	Part No.
*2	Tube, Charge Holder - 4 ft	100156440
	Tube, Charge Holder - 8 ft	100156441
	Tube, Charge Holder - 11 ft	100156442
	Tube, Charge Holder - 16 ft	100156443
	Tube, Charge Holder - 22 ft	100156444
*3	Fixture, Alignment	100156520
*4	Screw, Set 0.25”-20 D x 0.75” L	100028806
*5	Charge Tube Cushion	100156397
*6	Screw, Hex Socket 0.25”-20 D x 0.63” L	100028226
7	O-Ring, Buna 90 Duro #346	100001971
	O-Ring, Viton 95 Duro #346	100064845
	O-Ring, Aflas 90 Duro #346	101284368
	O-Ring, Backup #346	100157468
8	O-Ring, Buna 90 Duro #334	100001963
	O-Ring, Viton 95 Duro #334	100009382
	O-Ring, Aflas 90 Duro #334	13416
	O-Ring, Backup #334	100005381
9	Insert, Alignment (PAI)	100005255
	Insert, Alignment (AAI)	100005222
10	Crossover, Firing Head	100156632
11	Tandem, Grooved	100156629
12	Crossover, Box x Pin	100156630
13	Bull Plug	100156631
14	Bi-Directional Booster	See Appendix A
15	Detonating Cord	See Appendix A
16	Charge - 22.7g RDX DP	100005324
	Charge - 22.7g RDX DP/LD	100005325
	Charge - 25.0g RDX BH	100005319
	Charge - 22.7g RDX BH/LD	100005326
	Charge - 22.7g HMX *Millennium*™	101210674
	Charge - 22.7g HMX DP	100014352
	Charge - 22.7g HMX DP/LD	100005340
	Charge - 25.0g HMX BH	100157006
	Charge - 22.7g HMX BH/LD	120038060
	Charge - 26.0g PYX DP	100157060
17	Charge Clip	100005250
18	End Seal	100005251

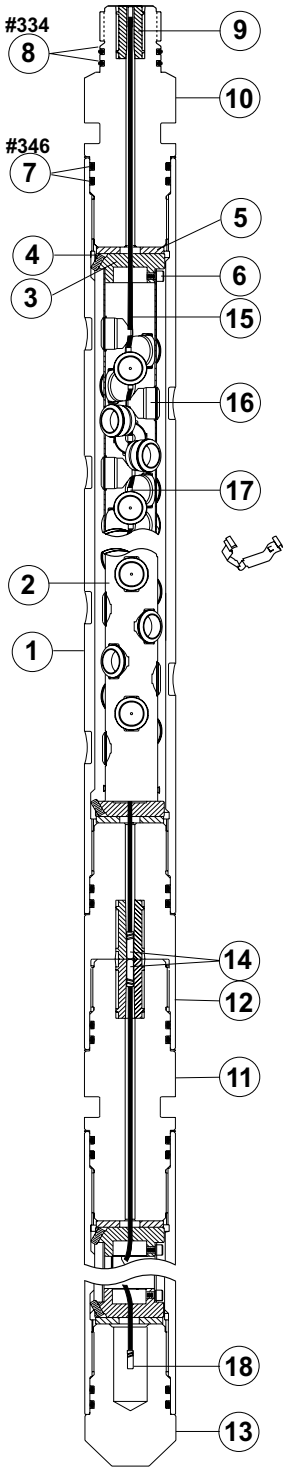

5 1/8-in. 12-spf OMNI™ VannGun™ System

*Included in Shipping Assembly.
AR Available Upon Request.

5 $^{1}/_{8}$-in. 12-spf OMNI™ VannGun™ System

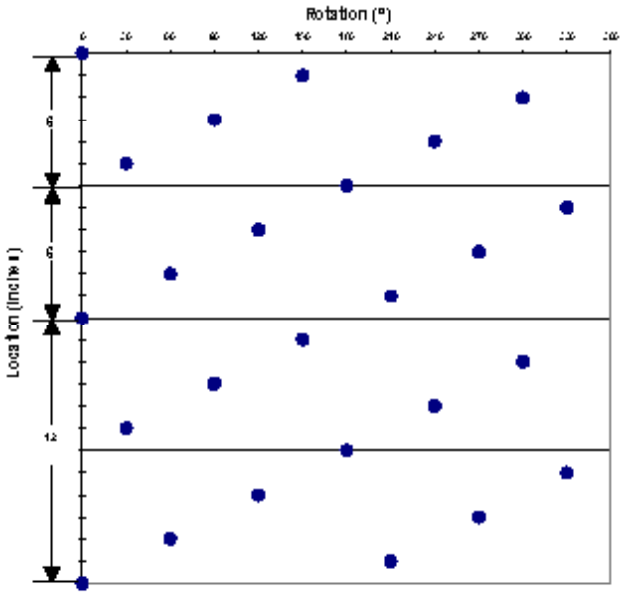

Shot Pattern for 5.125-in.
12-spf 30°/150° Phasing

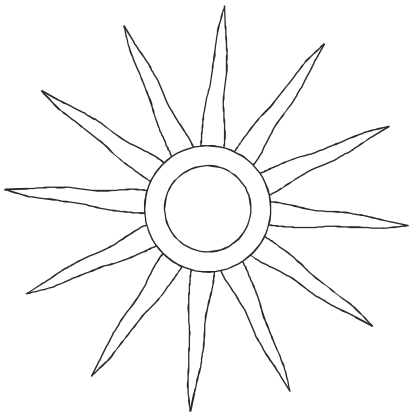

30°/150° Phasing
12 Perforation

VannGun™ Weights

Length ft (m)	4ft (1.22)	8 ft (2.44)	11 ft (3.35)	16 ft (4.88)	22 ft (6.71)
Loaded lb (kg)	118 (54)	245 (111)	340 (154)	498 (226)	688 (312)
Spacer lb (kg)	84 (38)	168 (76)	231 (105)	336 (152)	461 (209)

5 1/8-in. 12-spf OMNI™ VannGun™ SH System

Item	Part No.	Description	Part No.
	Premium		Standard
	100155857	Shipping Assembly - 4 ft	101215900
	100155858	Shipping Assembly - 8 ft	101215901
	100155859	Shipping Assembly - 11 ft	101215902
	100155860	Shipping Assembly - 16 ft	101215903
	100155861	Shipping Assembly - 22 ft	101215904
*1	100156367	Gun, Scallop - 4 ft	101215906
	100156368	Gun, Scallop - 8 ft	101215907
	100156369	Gun, Scallop - 11 ft	101215908
	100156370	Gun, Scallop - 16 ft	101215909
	100156371	Gun, Scallop - 22 ft	101215910

Item	Description	Part No.
*2	Tube, Charge Holder - 4 ft	100156430
	Tube, Charge Holder - 8 ft	100156431
	Tube, Charge Holder - 11 ft	100156439
	Tube, Charge Holder - 16 ft	100156432
	Tube, Charge Holder - 22 ft	100156433
*3	Fixture, Alignment	100156520
*4	Screw, Set 0.25”-20 D x 0.75” L	100028806
*5	Charge Tube Cushion	100156397
*6	Screw, Hex Socket 0.25”-20 D x 0.63” L	100028226
7	O-Ring, Buna 90 Duro #346	100001971
	O-Ring, Viton 95 Duro #346	100064845
	O-Ring, Aflas 90 Duro #346	101284368
	O-Ring, Backup #346	100157468
8	O-Ring, Buna 90 Duro #334	100001963
	O-Ring, Viton 95 Duro #334	100009382
	O-Ring, Aflas 90 Duro #334	13416
	O-Ring, Backup #334	100005381
9	Insert, Alignment (PAI)	100005255
	Insert, Alignment (AAI)	100005222
10	Crossover, Firing Head	100156632
11	Tandem, Grooved	100156629
12	Crossover, Box x Pin	100156630
13	Bull Plug	100156631
14	Bi-Directional Booster	See Appendix A
15	Detonating Cord	See Appendix A
16	Charge - 28.0g RDX SH	100005311
	Charge - 28.0g RDX SH/LD	101228756
	Charge - 28.0g HMX SH	100156995
	Charge - 28.0g HMX SH/LD	101233690
17	Charge Clip	100157866

*Included in Shipping Assembly.

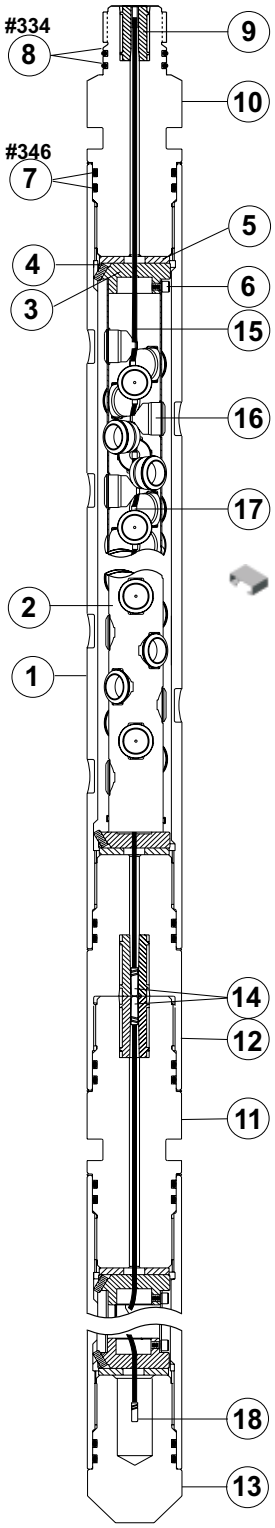

5 1/8-in. 12-spf OMNI™ VannGun™ SH System

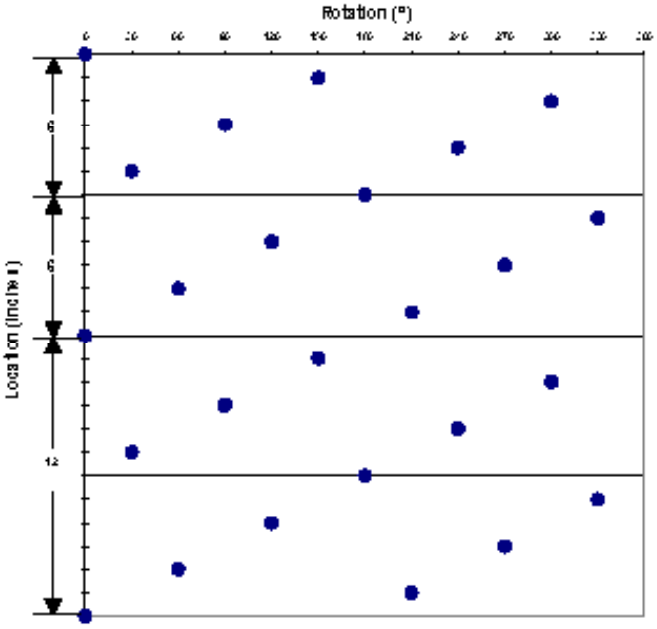

Shot Pattern for 5.125-in.
12-spf 30°/150° Phasing

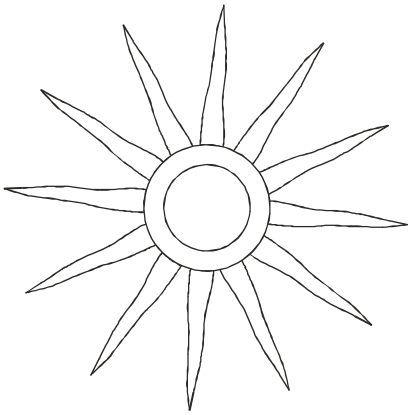

30°/150° Phasing
12 Perforation Planes

VannGun™ Weights

Length ft (m)	4ft (1.22)	8 ft (2.44)	11 ft (3.35)	16 ft (4.88)	22 ft (6.71)
Loaded lb (kg)	118 (54)	245 (111)	340 (154)	498 (226)	688 (312)
Spacer lb (kg)	84 (38)	168 (76)	231 (105)	336 (152)	461 (209)

5 1/8 in. 14-spf 25.7°/128.5° SH VannGun™ System

Item	Part No.	Description	Part No.
	Premium		Standard
	100155808	Shipping Assembly - 4 ft	101215936
	100155809	Shipping Assembly - 8 ft	101215938
	100155810	Shipping Assembly - 11 ft	101215939
	100155811	Shipping Assembly - 16 ft	101215940
	100155812	Shipping Assembly - 22 ft	101215941
*1	100156360	Gun, Scallop - 4 ft	101215942
	100156361	Gun, Scallop - 8 ft	101215943
	100156362	Gun, Scallop - 11 ft	101215944
	100156363	Gun, Scallop - 16 ft	101215945
	100156364	Gun, Scallop - 22 ft	101215946

Item	Description	Part No.
*2	Tube, Charge Holder - 4 ft	100156500
	Tube, Charge Holder - 8 ft	100156501
	Tube, Charge Holder - 11 ft	100156502
	Tube, Charge Holder - 16 ft	100156503
	Tube, Charge Holder - 22 ft	100156504
*3	Fixture, Alignment	100156505
*4	Screw, Set 0.25”-20 D x 0.75” L	100028806
*5	Charge Tube Cushion	100156397
*6	Screw, Hex Socket 0.25”-20 D x 0.63” L	100028226
7	O-Ring, Buna 90 Duro #346	100001971
	O-Ring, Viton 95 Duro #346	100064845
	O-Ring, Aflas 90 Duro #346	101284368
	O-Ring, Backup #346	100157468
8	O-Ring, Buna 90 Duro #334	100001963
	O-Ring, Viton 95 Duro #334	100009382
	O-Ring, Aflas 90 Duro #334	13416
	O-Ring, Backup #334	100005381
9	Insert, Alignment (PAI)	100005255
	Insert, Alignment (AAI)	100005222
10	Crossover, Firing Head	100156632
11	Tandem, Grooved	100156629
12	Crossover, Box x Pin	100156630
13	Bull Plug	100156631
14	Bi-Directional Booster	See Appendix A
15	Detonating Cord	See Appendix A
16	Charge - 32.0g RDX SH	100157007
	Charge - 32.0g HMX SH	100157011
17	Charge Clip	100157866
18	End Seal	100005251

*Included in Shipping Assembly.

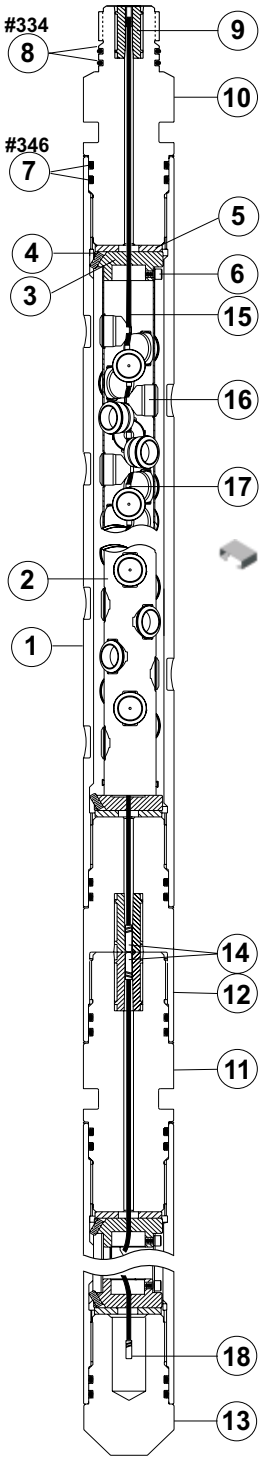

5 1/8 in. 14-spf
25.7°/128.5° SH VannGun™ System

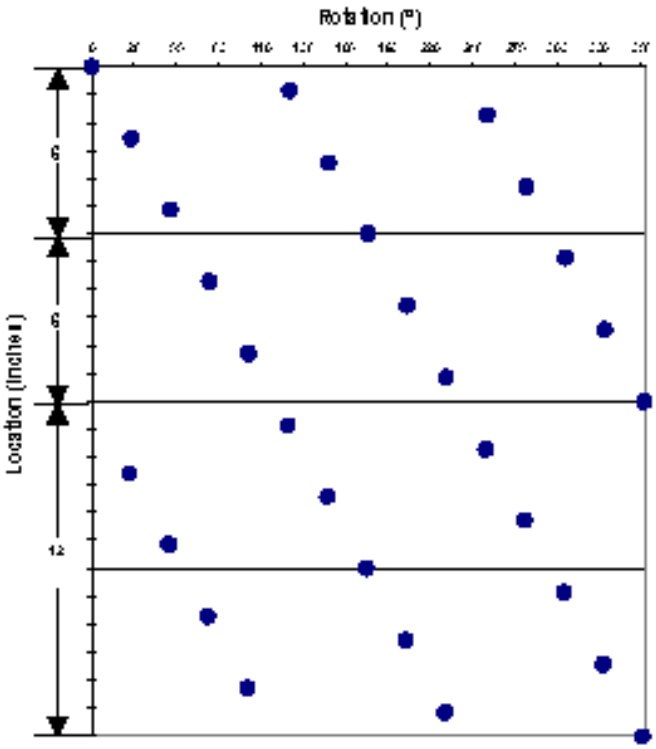

Shot Pattern for 5.125-in.
14-spf 25.7°/128.5° Phasing

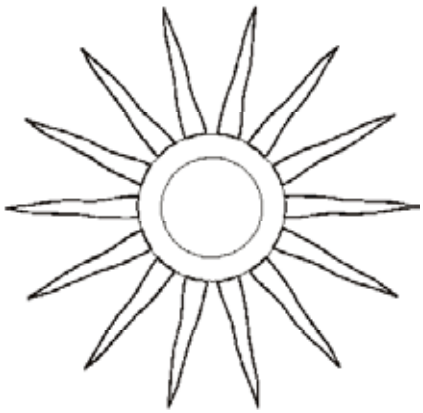

25.7°/128.5° Phasing
14 Perforation Planes

VannGun™ Weights

Length ft (m)	4ft (1.22)	8 ft (2.44)	11 ft (3.35)	16 ft (4.88)	22 ft (6.71)
Loaded lb (kg)	121 (55)	250 (113)	347 (157)	509 (231)	703 (319)
Spacer lb (kg)	84 (38)	168 (76)	231 (105)	335 (152)	461 (209)

5 1/8-in. 21-spf 3/Plane VannGun™ System

Item	Part No.	Description	Part No.
	Premium		Standard
	101205784	Shipping Assembly - 4 ft	101215564
	101205785	Shipping Assembly - 8 ft	101215593
	101205786	Shipping Assembly - 11 ft	101215607
	101205787	Shipping Assembly - 16 ft	101215610
	101205788	Shipping Assembly - 22 ft	101215612
*1	101205869	Gun, Scallop - 4 ft	101215563
	101205870	Gun, Scallop - 8 ft	101215592
	101205871	Gun, Scallop - 11 ft	101215594
	101205872	Gun, Scallop - 16 ft	101215609
	101205873	Gun, Scallop - 22 ft	101215611

Item	Description	Part No.
*2	Tube, Charge Holder - 4 ft	101205862
	Tube, Charge Holder - 8 ft	101205864
	Tube, Charge Holder - 11 ft	101205865
	Tube, Charge Holder - 16 ft	101205867
	Tube, Charge Holder - 22 ft	101205868
*3	Fixture, Alignment	101205874
*4	Screw, Set 0.25”-20 D x 0.75” L	100028806
*5	Charge Tube Cushion	100156397
*6	Screw, Hex Socket 0.25”-20 D x 0.63” L	100028226
7	O-Ring, Buna 90 Duro #346	100001971
	O-Ring, Viton 95 Duro #346	100064845
	O-Ring, Aflas 90 Duro #346	101284368
	O-Ring, Backup #346	100014417
8	O-Ring, Buna 90 Duro #334	100001963
	O-Ring, Viton 95 Duro #334	100009382
	O-Ring, Aflas 90 Duro #334	13416
	O-Ring, Backup #334	100005381
9	Insert, Alignment (PAI)	100005255
	Insert, Alignment (AAI)	100005222
10	Crossover, Firing Head	100156632
11	Tandem, Grooved	100156629
12	Crossover, Box x Pin	100156630
13	Bull Plug	100156631
14	Bi-Directional Booster	See Appendix A
15	Detonating Cord	See Appendix A
16	Charge - 22.0g RDX BH	101292616
	Charge - 22.0g HMX BH	AR
17	Charge Clip	N/A
18	End Seal	100005251

*Included in Shipping Assembly.
AR Available Upon Request.

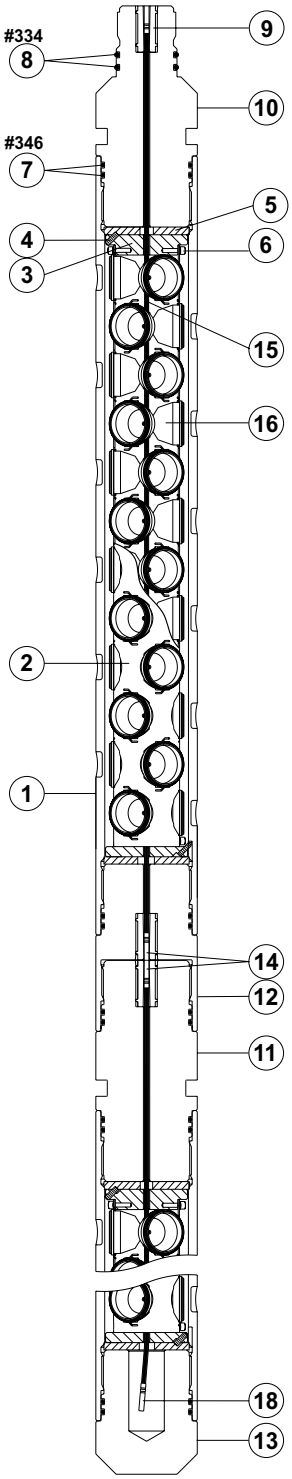

5 1/8-in. 21-spf 3/Plane VannGun™ System

5 $^{1}/_{8}$-in. 21-spf 3/Plane VannGun™ System

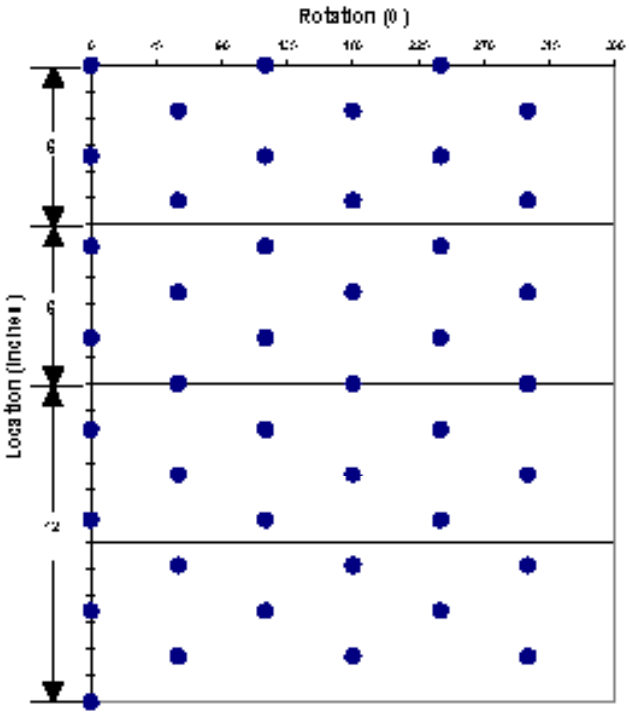

Shot Pattern for 5.125-in.
21-spf 60°/120° Phasing

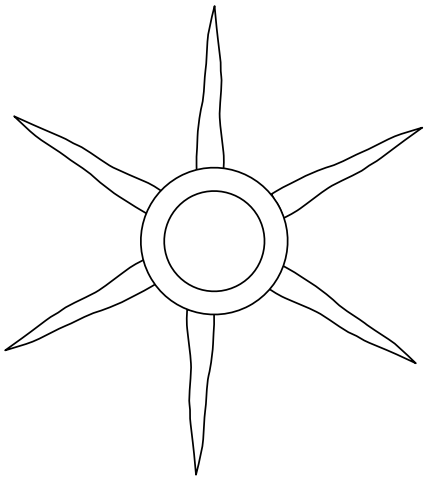

60°/120° Phasing
6 Perforation Planes

VannGun™ Weights

Length ft (m)	4ft (1.22)	8 ft (2.44)	11 ft (3.35)	16 ft (4.88)	22 ft (6.71)
Loaded lb (kg)	124 (56)	258 (117)	358 (162)	525 (238)	725 (329)
Spacer lb (kg)	84 (38)	167 (76)	230 (104)	334 (152)	459 (208)

5 $^{3}/_{4}$-in. 14-spf 25.7°/128.5° SH VannGun™ System

Item	Part No.	Description	Part No.
	Premium		Standard
	101272746	Shipping Assembly - 4 ft	N/A
	101272765	Shipping Assembly - 8 ft	
	101272766	Shipping Assembly - 11 ft	
	101272767	Shipping Assembly - 16 ft	
	101272769	Shipping Assembly - 22 ft	
*1	101201371	Gun, Scallop - 4 ft	N/A
	100156372	Gun, Scallop - 8 ft	
	100156373	Gun, Scallop - 11 ft	
	101201372	Gun, Scallop - 16 ft	
	100156374	Gun, Scallop - 22 ft	

Item	Description	Part No.
*2	Tube, Charge Holder - 4 ft	101272457
	Tube, Charge Holder - 8 ft	101272698
	Tube, Charge Holder - 11 ft	101272700
	Tube, Charge Holder - 16 ft	101272701
	Tube, Charge Holder - 22 ft	101272702
*3	Fixture, Alignment	101272730
*4	Screw, Set 0.25”-20 D x 0.63” L	100007783
*5	Charge Tube Cushion	100156565
*6	Screw, Hex Socket 0.25”-20 D x 0.63” L	100028226
7	O-Ring, Buna 90 Duro #351	100026787
	O-Ring, Viton 95 Duro #351	100064781
	O-Ring, Aflas 90 Duro #351	101204777
	O-Ring, Backup #351	100157480
8	O-Ring, Buna 90 Duro #334	100001963
	O-Ring, Viton 95 Duro #334	100009382
	O-Ring, Aflas 90 Duro #334	13416
	O-Ring, Backup #334	100005381
9	Insert, Alignment (PAI)	100005255
	Insert, Alignment (AAI)	100005222
10	Vented Crossover, Firing Head	101278969
11	Vented Tandem, Grooved	101278951
12	Vented Crossover, Box x Pin	101279018
13	Bull Plug	101278946
14	Bi-Directional Booster	See Appendix B
15	Detonating Cord	See Appendix B
16	Charge - 34.0g RDX SH/LD	101278515
17	Charge Clip	100157866
18	End Seal	100005251
19	Charge Tube Centralizer	101278485

*Included in Shipping Assembly.

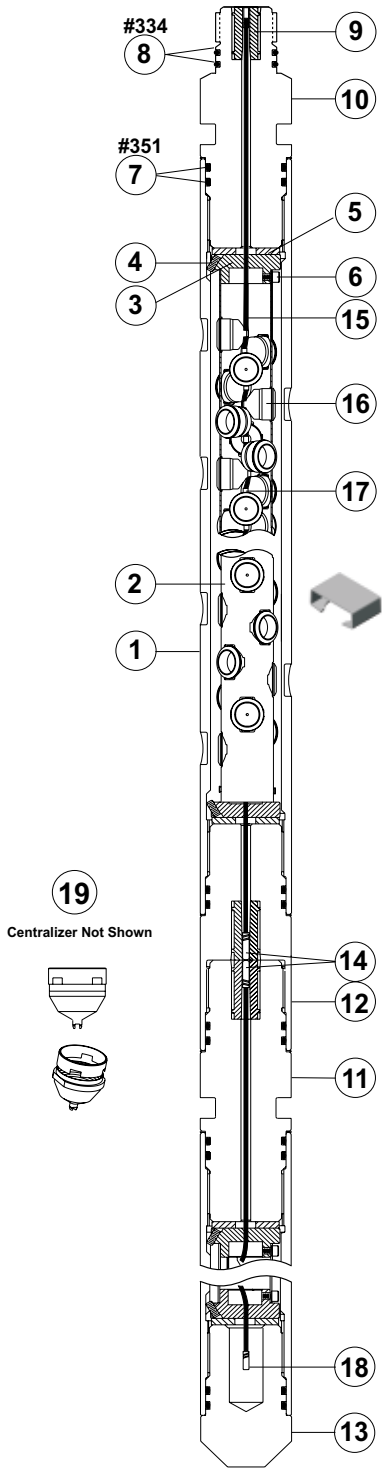

5 $^{3}/_{4}$-in. 14-spf
25.7°/128.5° SH VannGun™ System

5 $^{3}/_{4}$-in. 14-spf 25.7°/128.5° SH VannGun™ System

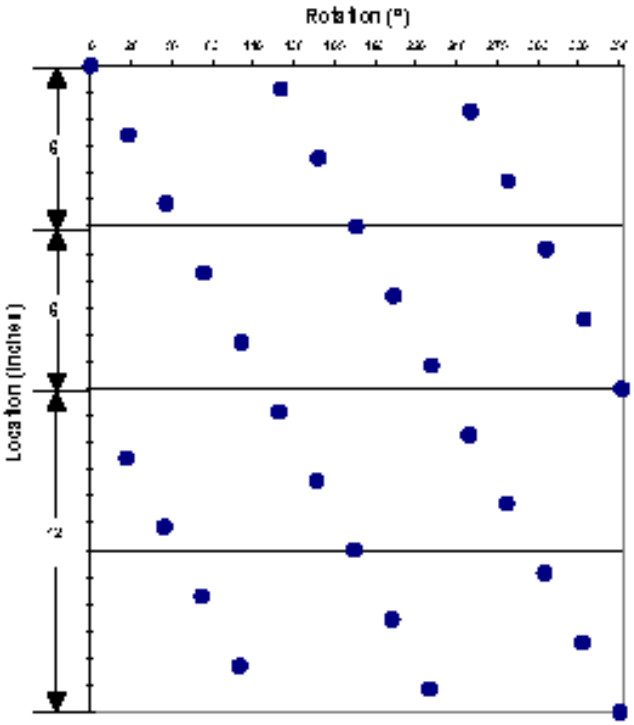

Shot Pattern for 5.75-in.
14-spf 25.7°/128.5° Phasing

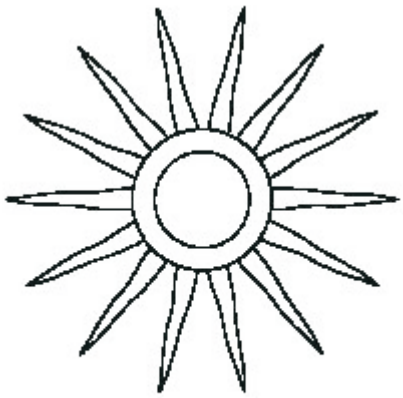

25.7°/128.5° Phasing
14 Perforation Planes

VannGun™ Weights

Length ft (m)	4ft (1.22)	8 ft (2.44)	11 ft (3.35)	16 ft (4.88)	22 ft (6.71)
Loaded lb (kg)	130 (59)	269 (122)	374 (170)	607 (275)	838 (380)
Spacer lb (kg)	94 (42)	187 (85)	257 (117)	374 (170)	515 (234)

6-in. 12-spf 51.4°/154.2° VannGun™ System

Item	Part No.	Description	Part No.
	Premium		Standard
	100005393	Shipping Assembly - 4 ft	N/A
	100005394	Shipping Assembly - 8 ft	
	100157373	Shipping Assembly - 15 ft	
*1	100156291	Gun, Scallop - 4 ft	N/A
	100156292	Gun, Scallop - 8 ft	
	100156293	Gun, Scallop - 15 ft	

Item	Description	Part No.
*2A	Tube, Charge Holder (Inner) - 4 ft	100156400
	Tube, Charge Holder (Inner) - 8 ft	100156402
	Tube, Charge Holder (Inner) - 15 ft	100156403
*2B	Tube, Charge Holder (Outer) - 37.73 in	100156404
	Tube, Charge Holder (Outer) - 86.73 in	100156405
	Tube, Charge Holder (Outer) - 170.73 in	100156406
*3	Fixture, Alignment	100156407
*4	Screw, Set 0.25”-20 D x 0.75” L	100037548
*5	Charge Tube Cushion	100156408
*6	Screw, Flat Head Cap 0.25”-20 D x 2” L	100138101
7	O-Ring, Buna 90 Duro #428	100001979
	O-Ring, Viton 95 Duro #428	100064852
	O-Ring, Aflas 90 Duro #428	N/A
	O-Ring, Backup #428	N/A
8	O-Ring, Buna 90 Duro #334	100001963
	O-Ring, Viton 95 Duro #334	100009382
	O-Ring, Aflas 90 Duro #334	13416
	O-Ring, Backup #334	100005381
9	Insert, Alignment (PAI)	100005255
	Insert, Alignment (AAI)	100005222
10	Crossover, Firing Head	100156602
11	Tandem, Grooved	100156593
12	Crossover, Box x Pin	100156594
13	Bull Plug	100156597
14	Bi-Directional Booster	See Appendix A
15	Detonating Cord	See Appendix A
16	Charge - 32.5g RDX DP	100156993
	Charge - 32.0g HMX DP	100156994
	Charge - 32.0g HMX BH	100156992
	Charge - 32.0g RDX BH	100156991
17	Charge Clip	N/A
18	End Seal	100005251

*Included in Shipping Assembly.

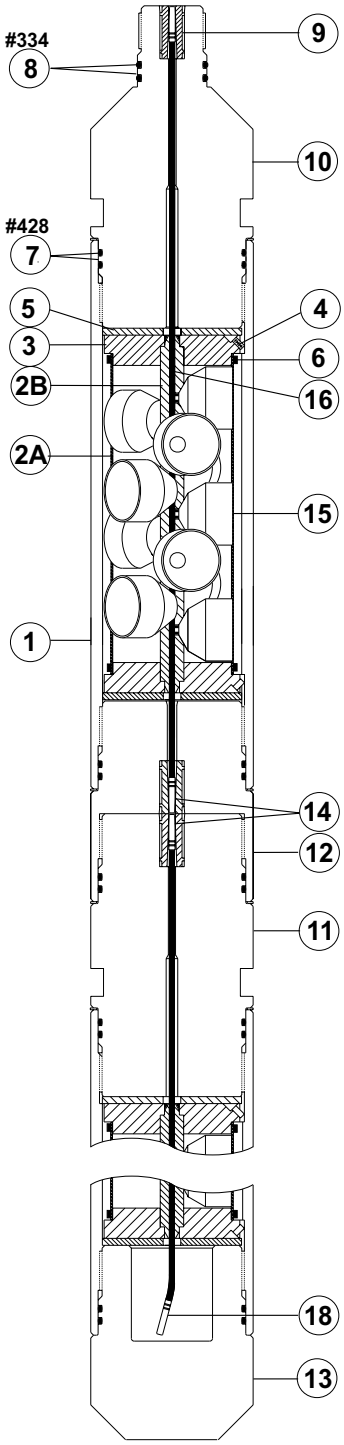

6-in. 12-spf 51.4°/154.2° VannGun™ System

6-in. 12-spf 51.4°/154.2° VannGun™ System

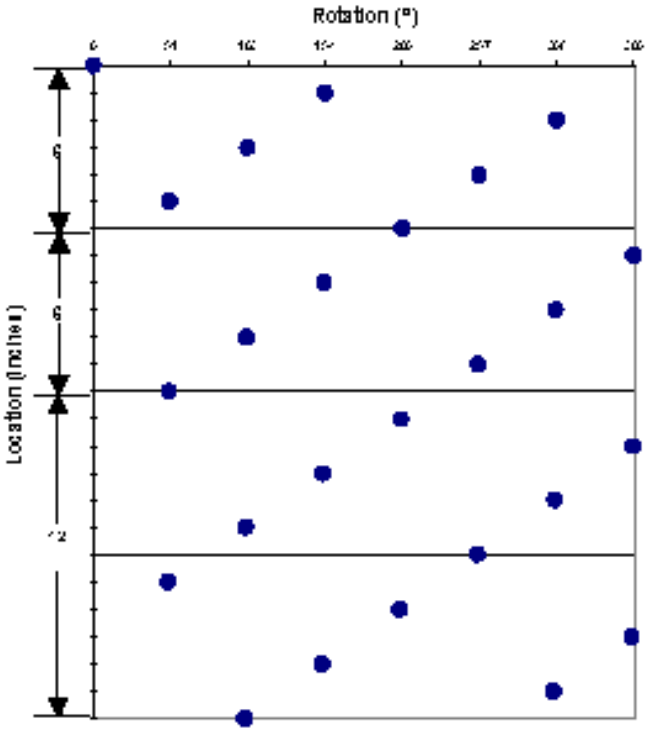

Shot Pattern for 6-in.
12-spf 51.4°/154.2° Phasing

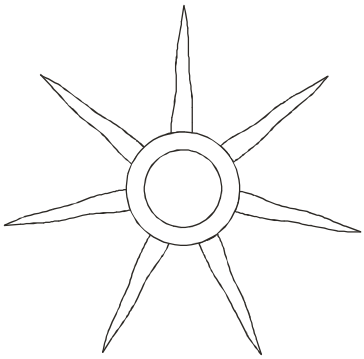

51.4°/154.2° Phasing
7 Perforation Planes

VannGun™ Weights

Length ft (m)	4ft (1.22)	8 ft (2.44)	16 ft (4.88)
Loaded lb (kg)	136 (62)	282 (128)	536 (243)
Spacer lb (kg)	102 (46)	204 (93)	383 (174)

6 1/2-in. 12-spf 45°/135° VannGun™ System

Item	Part No.	Description	Part No.
	Premium		Standard
	101208443	Shipping Assembly - 4 ft	N/A
	101208445	Shipping Assembly - 8 ft	
	101208444	Shipping Assembly - 16 ft	

*1	101208440	Gun, Scallop - 4 ft	N/A
	101208441	Gun, Scallop - 8 ft	
	101208442	Gun, Scallop - 16 ft	

Item	Description	Part No.
*2	Tube, Charge Holder - 4 ft	101213867
	Tube, Charge Holder - 8 ft	101213868
	Tube, Charge Holder - 16 ft	101213869
*3	Fixture, Alignment	101208436
*4	Screw, Set 0.25”-20 D x 0.75” L	100028806
*5	Charge Tube Cushion	101208483
*6	Screw, Hex Socket 0.25”-20 D x .50” L	100028225
7	O-Ring, Buna 90 Duro #358	100026772
	O-Ring, Viton 95 Duro #358	100064776
	O-Ring, Aflas 90 Duro #358	N/A
	O-Ring, Backup #358	101216688
8	O-Ring, Buna 90 Duro #334	100001963
	O-Ring, Viton 95 Duro #334	100009382
	O-Ring, Aflas 90 Duro #334	13416
	O-Ring, Backup #334	100005318
9	Insert, Alignment (PAI)	100005255
	Insert, Alignment (AAI)	100005222
10	Crossover, Firing Head	101231250
11	Tandem, Grooved	101208437
12	Crossover, Box x Pin	101208439
13	Bull Plug	101208438
14	Bi-Directional Booster	See Appendix A
15	Detonating Cord	See Appendix A
16	Charge - 39.0g RDX Mirage™ BH	101228161
	Charge - 39.0g RDX Mirage™ SH	101228037
	Charge - 56.5g RDX SH	101213474
	Charge - 56.5g RDX SH/LD	101212693
17	Charge Clip	100157866
18	End Seal	100005251

*Included in Shipping Assembly.

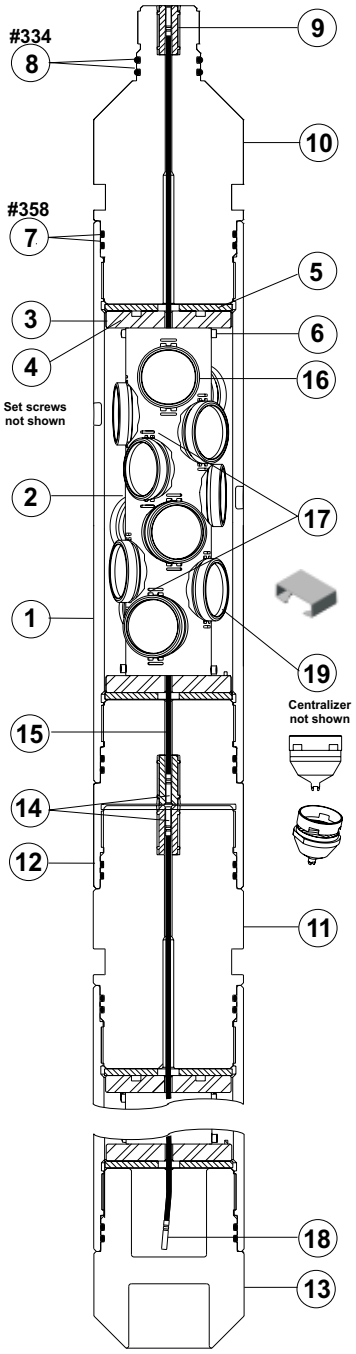

6 1/2-in. 12-spf 45°/135° VannGun™ System

6 $^1/_2$-in. 12-spf 45°/135° VannGun™ System

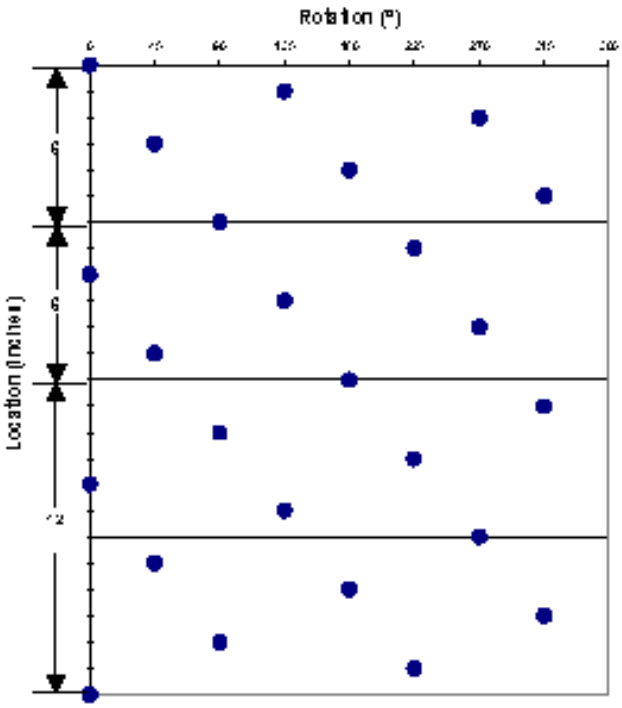

Shot Pattern for 6.5-in.
12-spf 45°/135° Phasing

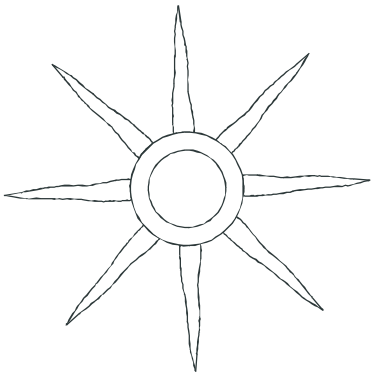

45°/135° Phasing
8 Perforation Planes

VannGun™ Weights

Length ft (m)	4ft (1.22)	8 ft (2.44)	16 ft (4.88)
Loaded lb (kg)	147 (67)	303 (137)	613 (278)
Spacer lb (kg)	114 (52)	228 (103)	456 (207)

6 1/2-in. 14-spf 138° VannGun™ System

Item	Part No.	Description	Part No.
	Premium		Standard
	101213823	Shipping Assembly - 4 ft	N/A
	101213825	Shipping Assembly - 8 ft	
	101213828	Shipping Assembly - 16 ft	
*1	101213773	Gun, Scallop - 4 ft	N/A
	101213775	Gun, Scallop - 8 ft	
	101213776	Gun, Scallop - 16 ft	

Item	Description	Part No.
*2	Tube, Charge Holder - 4ft	101208474
	Tube, Charge Holder - 8ft	101208475
	Tube, Charge Holder - 16ft	101208476
*3	Fixture, Alignment	101294529
*4	Screw, Set 0.25”-20 D x 0.75” L	100028806
*5	Charge Tube Cushion	101208483
*6	Screw, Hex Socket 0.25”-20 D x .63” L	100028226
7	O-Ring, Buna 90 Duro #358	100026772
	O-Ring, Viton 95 Duro #358	100064776
	O-Ring, Aflas 90 Duro #358	N/A
	O-Ring, Backup #358	101216688
8	O-Ring, Buna 90 Duro #334	100001963
	O-Ring, Viton 95 Duro #334	100009382
	O-Ring, Aflas 90 Duro #334	13416
	O-Ring, Backup #334	100005381
9	Insert, Alignment (PAI)	100005255
	Instert, Alignment (AAI)	100005222
10	Crossover, Firing Head	101231250
11	Tandem, Grooved	101208437
12	Crossover, Box x Pin	101208439
13	Bull Plug	101208438
14	Bi-Directional Booster	See Appendix A
15	Detonating Cord	See Appendix A
16	Charge - 39.0g RDX Mirage™ BH	101228161
	Charge - 39.0g RDX Mirage™ SH	101228037
17	Charge Clip (not shown)	100157866
18	End Seal (not shown)	100005251

*Included in Shipping Assembly.

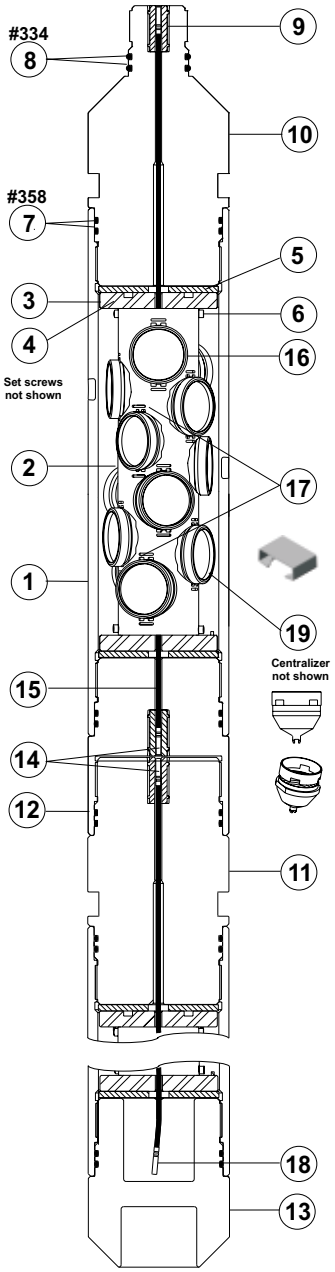

6 1/2-in. 14-spf 138° VannGun™ System

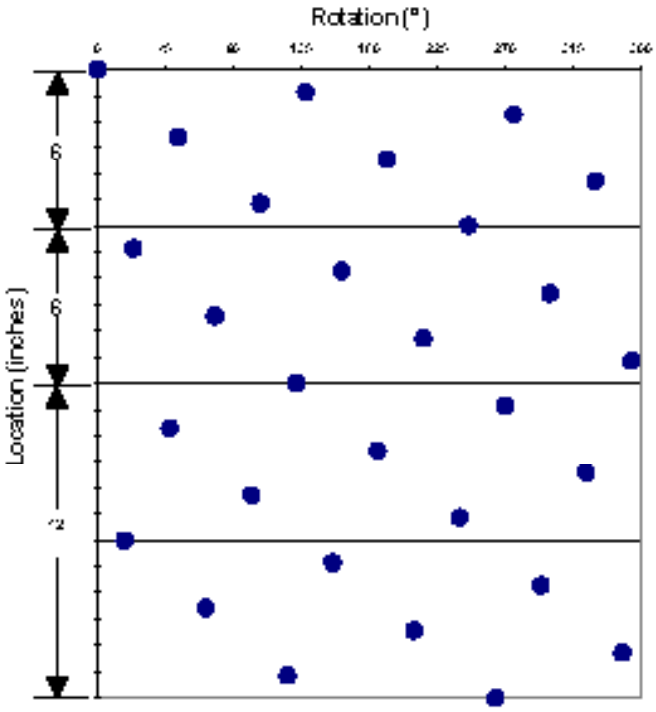

Shot Pattern for 6.5-in.
14-spf 138° Phasing

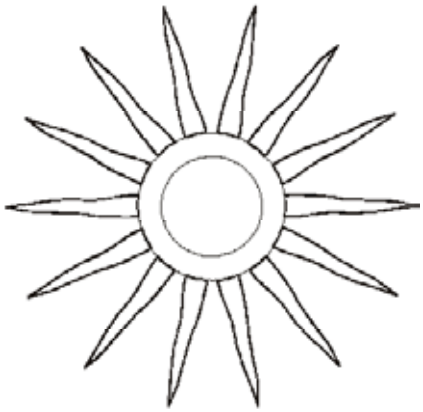

138° Phasing
14 Perforation Planes

VannGun™ Weights

Length ft (m)	4ft (1.22)	8 ft (2.44)	16 ft (4.88)
Loaded lb (kg)	150 (68)	310 (141)	629 (285)
Spacer lb (kg)	114 (52)	228 (103)	456 (207)

7-in. 12-spf 45°/135° DP VannGun™ System

Item	Part No.	Description	Part No.
	Premium		Standard
	101269014	Shipping Assembly - 4 ft	N/A
	101269017	Shipping Assembly - 8 ft	
	101269018	Shipping Assembly - 16 ft	
*1	101213936	Gun, Scallop - 4 ft	N/A
	101213937	Gun, Scallop - 8 ft	
	101213938	Gun, Scallop - 16 ft	

Item	Description	Part No.
*2	Tube, Charge Holder - 4 ft	101269023
	Tube, Charge Holder - 8 ft	101269027
	Tube, Charge Holder - 16 ft	101269028
*3	Fixture, Alignment	101269021
*4	Screw, Set 0.25”-20 D x 0.75” L	100028806
*5	Charge Tube Cushion	100156412
*6	Screw, Hex Socket 0.25”-20 D x .63” L	100028226
7	O-Ring, Buna 90 Duro #361	100002560
	O-Ring, Viton 95 Duro #361	100064917
	O-Ring, Aflas 90 Duro #361	100157506
	O-Ring, Backup #361	100157472
8	O-Ring, Buna 90 Duro #334	100001963
	O-Ring, Viton 95 Duro #334	100009382
	O-Ring, Aflas 90 Duro #334	13416
	O-Ring, Backup #334	100005381
9	Insert, Alignment (PAI)	100005255
	Insert, Alignment (AAI)	100005222
10	Crossover, Firing Head	100005269
11	Tandem, Grooved	100010326
12	Crossover, Box x Pin	100010327
13	Bull Plug	100005270
14	Bi-Directional Booster	See Appendix A
15	Detonating Cord	See Appendix A
16	Charge - 22.7g DP/LD RDX	100005325
	Charge - 22.7g DP/LD HMX	100005340
	Charge - 22.7g SDP HMX *Millennium*™	101210674
17	Charge Clip	100005250
18	End Seal	100005251

*Included in Shipping Assembly.

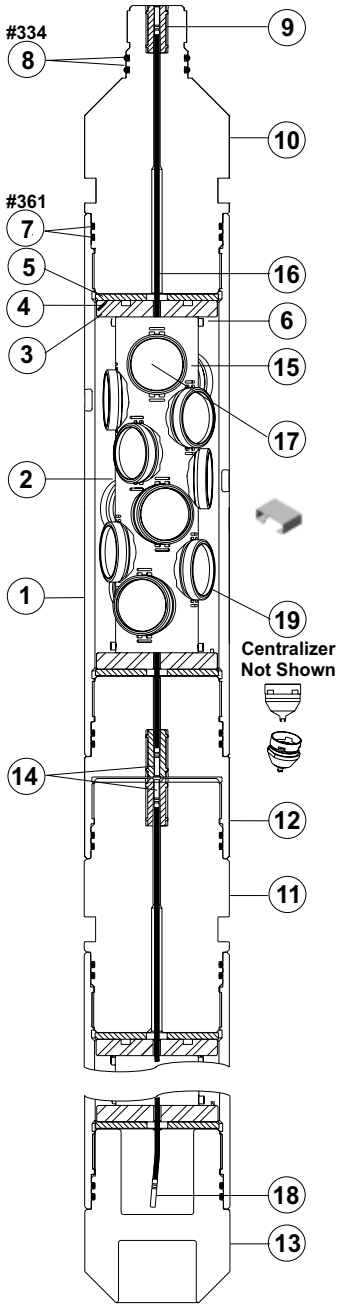

7-in. 12-spf
45°/135° DP VannGun™ System

7-in. 12-spf 45°/135° DP VannGun™ System

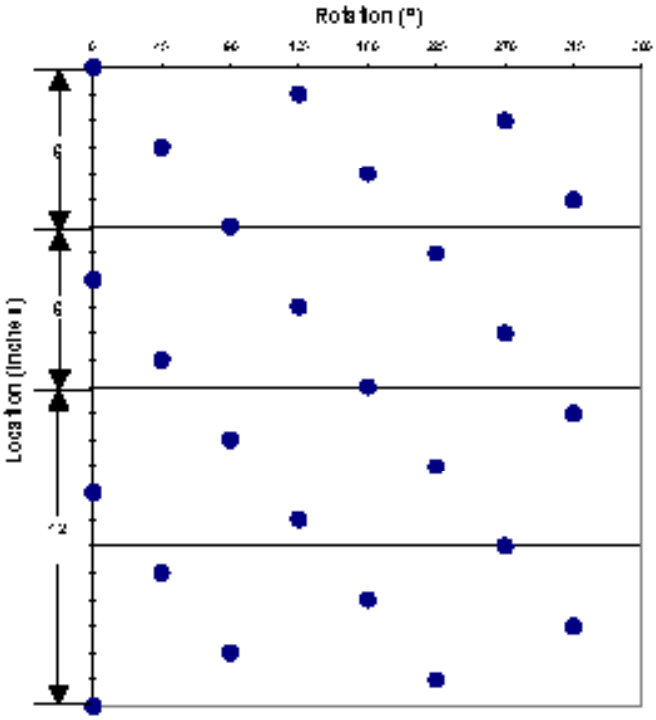

Shot Pattern for 7-in.
12-spf 45°/135° Phasing

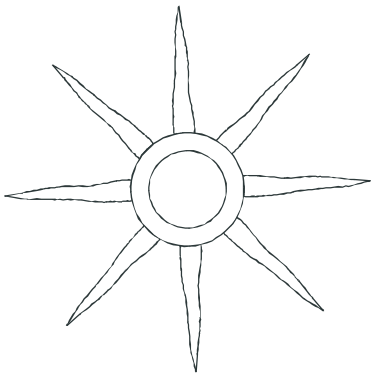

45°/135° Phasing
8 Perforation Planes

VannGun™ Weights

Length ft (m)	4ft (1.22)	8 ft (2.44)	16 ft (4.88)
Loaded lb (kg)	165 (75)	336 (152)	678 (307)
Spacer lb (kg)	129 (59)	258 (117)	516 (234)

7-in. 12-spf 45°/135° BH/SH VannGun™ System

Item	Part No.	Description	Part No.
	Premium		Standard
	101213876	Shipping Assembly - 4 ft	N/A
	101213877	Shipping Assembly - 8 ft	
	101213878	Shipping Assembly - 16 ft	
*1	101213936	Gun, Scallop - 4 ft	N/A
	101213937	Gun, Scallop - 8 ft	
	101213938	Gun, Scallop - 16 ft	

Item	Description	Part No.
*2	Tube, Charge Holder - 4 ft	101213867
	Tube, Charge Holder - 8 ft	101213868
	Tube, Charge Holder - 16 ft	101213869
*3	Fixture, Alignment	101210059
*4	Screw, Set 0.25”-20 D x 0.75” L	100028806
*5	Charge Tube Cushion	100156412
*6	Screw, Hex Socket 0.25”-20 D x .63” L	100028226
7	O-Ring, Buna 90 Duro #361	100002560
	O-Ring, Viton 95 Duro #361	100064917
	O-Ring, Aflas 90 Duro #361	100157506
	O-Ring, Backup #361	100157472
8	O-Ring, Buna 90 Duro #334	100001963
	O-Ring, Viton 95 Duro #334	100009382
	O-Ring, Aflas 90 Duro #334	13416
	O-Ring, Backup #334	100005381
9	Insert, Alignment (PAI)	100005255
	Insert, Alignment (AAI)	100005222
10	Crossover, Firing Head	100005269
11	Tandem, Grooved	100010326
12	Crossover, Box x Pin	100010327
13	Bull Plug	100005270
14	Bi-Directional Booster	See Appendix A
15	Detonating Cord	See Appendix A
16	Charge - 39.0g RDX Mirage™ BH	101228161
	Charge - 39.0g RDX Mirage™ SH	101228037
	Charge - 56.5g RDX SH	101213474
	Charge - 56.5g RDX SH/LD	101212693
17	Charge Clip	100157866
18	End Seal	100005251
19	Charge Tube Centralizer	101247136

*Included in Shipping Assembly.

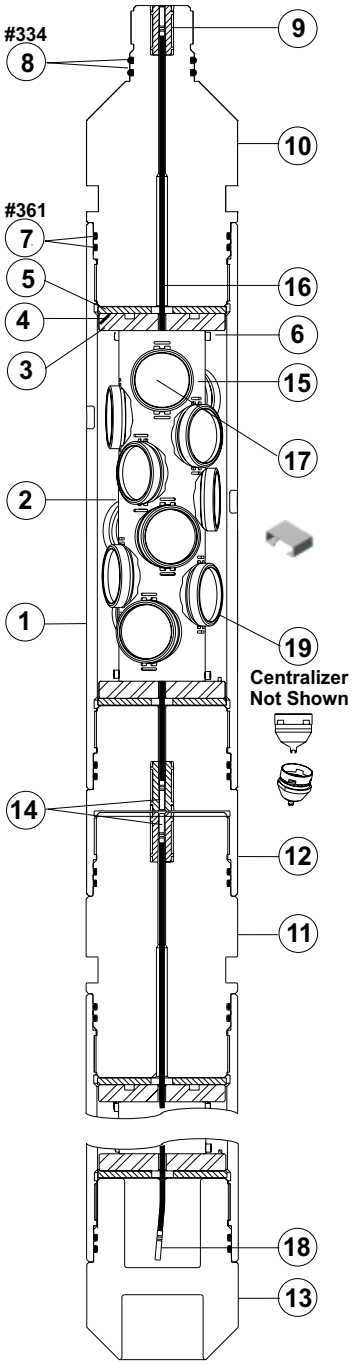

7-in. 12-spf
45°/135° BH/SH VannGun™ System

7-in. 12-spf 45°/135° BH/SH VannGun™ System

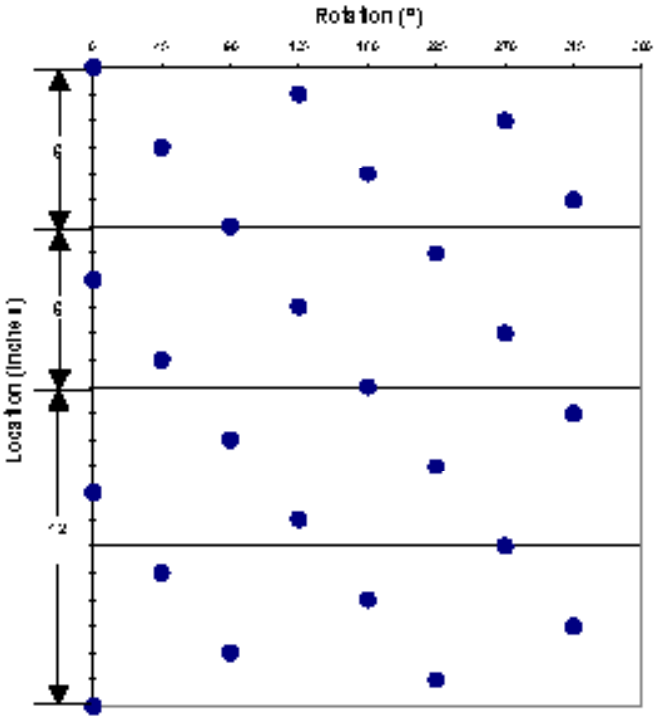

Shot Pattern for 7-in.
12-spf 45°/135° Phasing

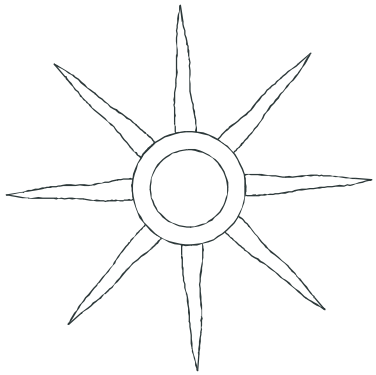

45°/135° Phasing
8 Perforation Planes

VannGun™ Weights

Length ft (m)	4ft (1.22)	8 ft (2.44)	16 ft (4.88)
Loaded lb (kg)	165 (75)	336 (152)	678 (307)
Spacer lb (kg)	129 (59)	258 (117)	516 (234)

7-in. 12-spf 45°/135° *Millennium*™ VannGun™ System

Item	Part No.	Description	Part No.
	Premium		Standard
	101274451	Shipping Assembly - 4 ft	N/A
	101274462	Shipping Assembly - 8 ft	
	101274463	Shipping Assembly - 16 ft	
*1	101213936	Gun, Scallop - 4 ft	N/A
	101213937	Gun, Scallop - 8 ft	
	101213938	Gun, Scallop - 16 ft	

Item	Description	Part No.
*2	Tube, Charge Holder - 4 ft	101274465
	Tube, Charge Holder - 8 ft	101274466
	Tube, Charge Holder - 16 ft	101274467
*3	Fixture, Alignment	101274483
*4	Screw, Set 0.25”-20 D x 0.75” L	100028806
*5	Charge Tube Cushion	100156412
*6	Screw, Hex Socket 0.25”-20 D x .63” L	100028226
7	O-Ring, Buna 90 Duro #361	100002560
	O-Ring, Viton 95 Duro #361	100064917
	O-Ring, Aflas 90 Duro #361	100157506
	O-Ring, Backup #361	100157472
8	O-Ring, Buna 90 Duro #334	100001963
	O-Ring, Viton 95 Duro #334	100009382
	O-Ring, Aflas 90 Duro #334	13416
	O-Ring, Backup #334	100005381
9	Insert, Alignment (PAI)	100005255
	Insert, Alignment (AAI)	100005222
10	Crossover, Firing Head	100005269
11	Tandem, Grooved	100010326
12	Crossover, Box x Pin	100010327
13	Bull Plug	100005270
14	Bi-Directional Booster	See Appendix A
15	Detonating Cord	See Appendix A
16	Charge - 39.0g HMX ***Millennium***™	101207997
17	Charge Clip	100157866
18	End Seal	100005251

*Included in Shipping Assembly.

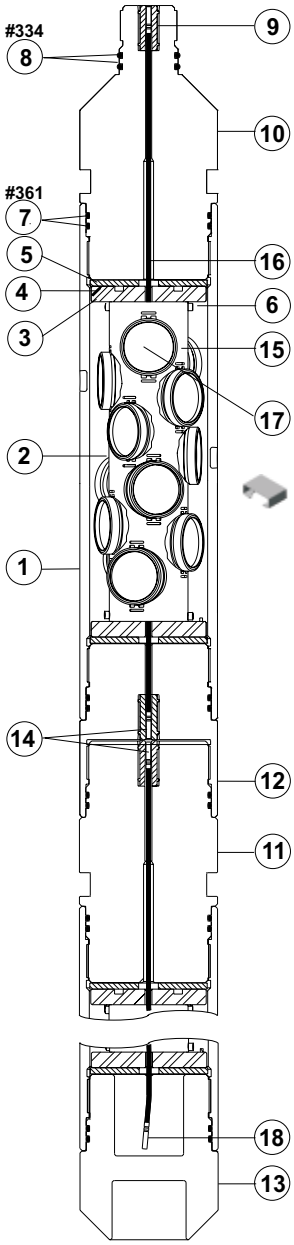

7-in. 12-spf
45°/135° Millennium™ VannGun™ System

7-in. 12-spf 45°/135° *Millennium*™ VannGun™ System

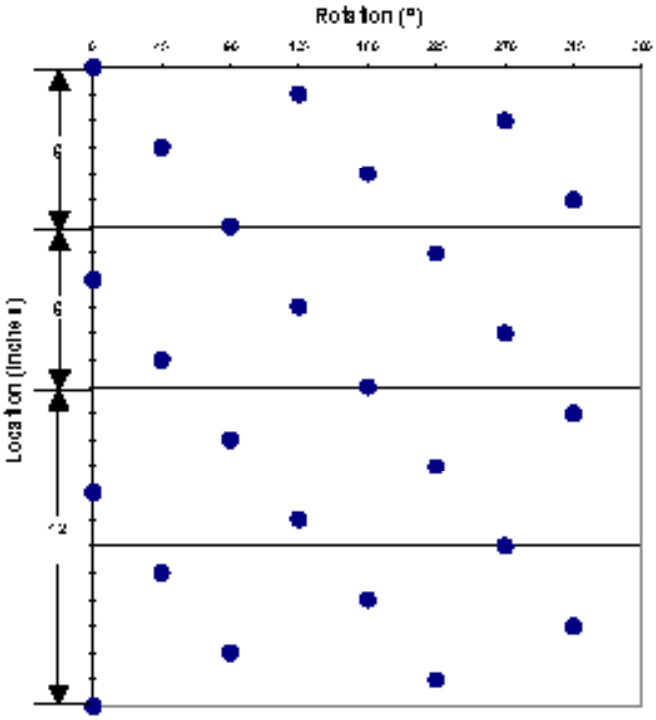

Shot Pattern for 7-in.
12-spf 45°/135° Phasing

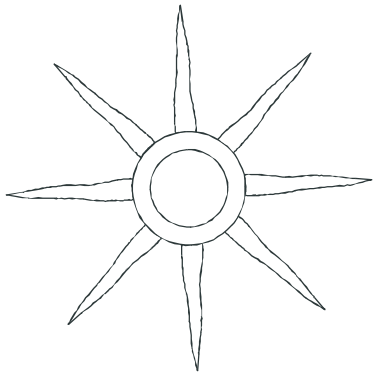

45°/135° Phasing
8 Perforation Planes

VannGun™ Weights

Length ft (m)	4ft (1.22)	8 ft (2.44)	16 ft (4.88)
Loaded lb (kg)	165 (75)	336 (152)	678 (307)
Spacer lb (kg)	129 (59)	258 (117)	516 (234)

7-in. 12-spf 45°/135° MaxForces™ VannGun™ System

Item	Part No.	Description	Part No.
	Premium		Standard
	101707389	Shipping Assembly - 4 ft	N/A
	101707390	Shipping Assembly - 8 ft	
	101707392	Shipping Assembly - 16 ft	
*1	101213936	Gun, Scallop - 4 ft	N/A
	101213937	Gun, Scallop - 8 ft	
	101213938	Gun, Scallop - 16 ft	

Item	Description	Part No.
*2	Tube, Charge Holder - 4 ft	101707938
	Tube, Charge Holder - 8 ft	101707939
	Tube, Charge Holder - 16 ft	101707941
*3	Fixture, Alignment	101707690
*4	Screw, Set 0.25”-20 D x 0.75” L	100028806
*5	Charge Tube Cushion	100156412
*6	Screw, Hex Socket 0.25”-20 D x .63” L	100028226
7	O-Ring, Buna 90 Duro #361	100002560
	O-Ring, Viton 95 Duro #361	100064917
	O-Ring, Aflas 90 Duro #361	100157506
	O-Ring, Backup #361	100157472
8	O-Ring, Buna 90 Duro #334	100001963
	O-Ring, Viton 95 Duro #334	100009382
	O-Ring, Aflas 90 Duro #334	13416
	O-Ring, Backup #334	100005381
9	Insert, Alignment (PAI)	100005255
	Insert, Alignment (AAI)	100005222
10	Crossover, Firing Head	100005269
11	Tandem, Grooved	100010326
12	Crossover, Box x Pin	100010327
13	Bull Plug	100005270
14	Bi-Directional Booster	See Appendix A
15	Detonating Cord	See Appendix A
16	Charge - 39.0g HMX **MaxForce™**	101702911
17	Charge Clip	100157866
18	End Seal	100005251
19	Centralizer Tandem (not shown)	101238387
20	Centralizer Ring (not shown)	101216946

*Included in Shipping Assembly.
MaxForce™ is Proprietary to Halliburton

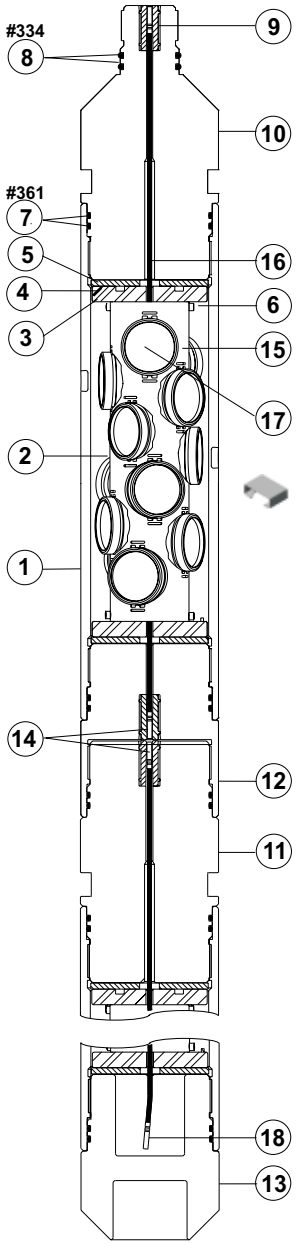

7-in. 12-spf
45°/135° MaxForce™ VannGun™ System

7-in. 12-spf 45°/135° MaxForces™ VannGun™ System

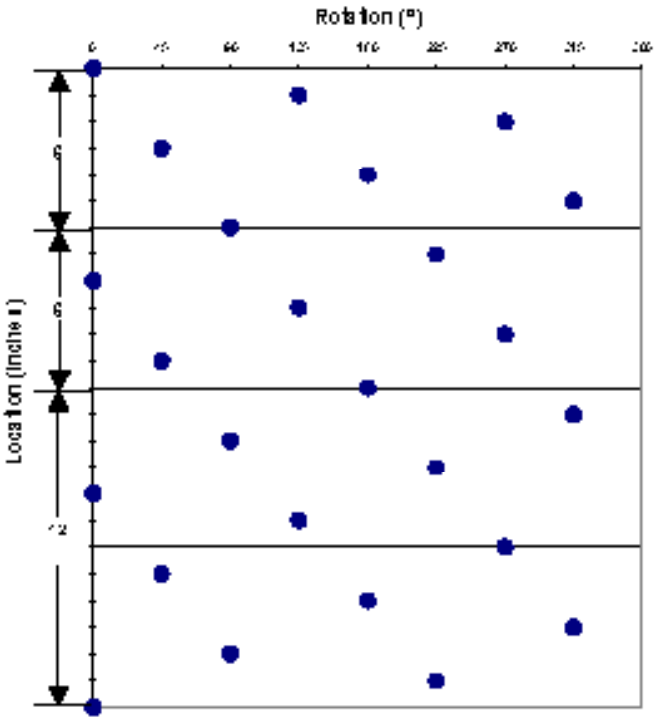

Shot Pattern for 7-in.
12-spf 45°/135° Phasing

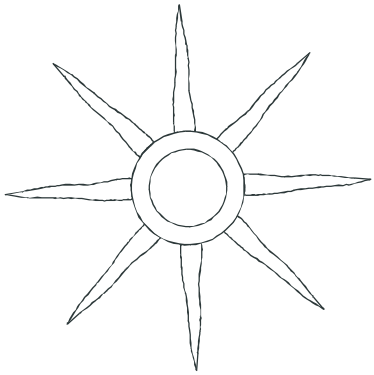

45°/135° Phasing
8 Perforation Planes

VannGun™ Weights

Length ft (m)	4ft (1.22)	8 ft (2.44)	16 ft (4.88)
Loaded lb (kg)	165 (75)	336 (152)	678 (307)
Spacer lb (kg)	129 (59)	258 (117)	516 (234)

7-in. 14-spf 138° BH/SH VannGun™ System

Item	Part No.	Description	Part No.
	Premium		Standard
	101210061	Shipping Assembly - 4 ft	N/A
	101210062	Shipping Assembly - 8 ft	
	101210063	Shipping Assembly - 16 ft	
*1	101210055	Gun, Scallop - 4 ft	N/A
	101210056	Gun, Scallop - 8 ft	
	101210057	Gun, Scallop - 16 ft	

Item	Description	Part No.
*2	Tube, Charge Holder - 4 ft	101208474
	Tube, Charge Holder - 8 ft	101208475
	Tube, Charge Holder - 16 ft	101208476
*3	Fixture, Alignment	101210059
*4	Screw, Set 0.25”-20 D x 0.75” L	100028806
*5	Charge Tube Cushion	100156412
*6	Screw, Hex Socket 0.25”-20 D x .63” L	100028226
7	O-Ring, Buna 90 Duro #361	100002560
	O-Ring, Viton 95 Duro #361	100064917
	O-Ring, Aflas 90 Duro #361	100157506
	O-Ring, Backup #361	100157472
8	O-Ring, Buna 90 Duro #334	100001963
	O-Ring, Viton 95 Duro #334	100009382
	O-Ring, Aflas 90 Duro #334	13416
	O-Ring, Backup #334	100005381
9	Insert, Alignment (PAI)	100005255
	Insert, Alignment (AAI)	100005222
10	Crossover, Firing Head	100005269
11	Tandem, Grooved	100010326
12	Crossover, Box x Pin	100010327
13	Bull Plug	100005270
14	Bi-Directional Booster	See Appendix A
15	Detonating Cord	See Appendix A
16	Charge - 39.0g RDX Mirage™ BH	101228161
	Charge - 39.0g RDX 12/14 SPF Mirage™ BH	101376793
	Charge - 39.0g HMX Mirage™ SH	101228037
	Charge - 56.5g RDX SH	101213474
	Charge - 47.0g HMX Mirage™ BH	101329124
17	Charge Clip	100157866
18	End Seal	100005251

*Included in Shipping Assembly.

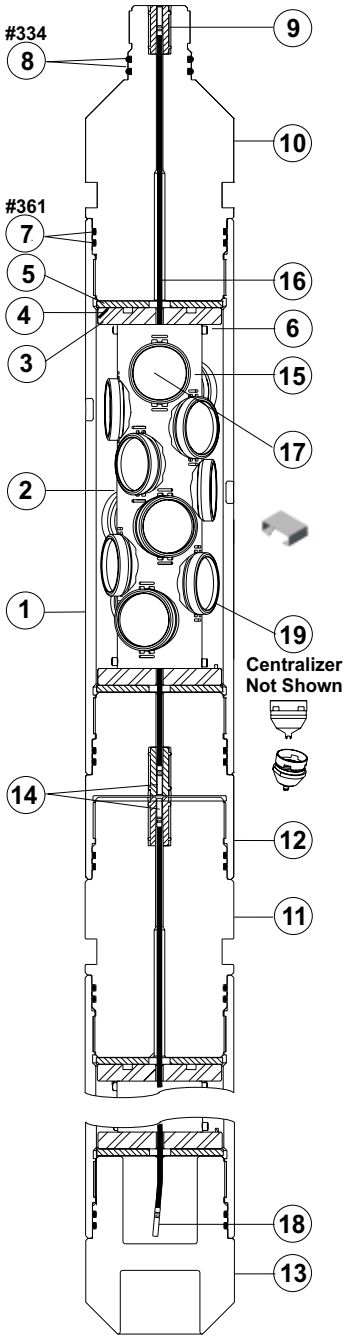

7-in. 14-spf
138° BH/SH VannGun™ System

7-in. 14-spf 138° BH/SH VannGun™ System

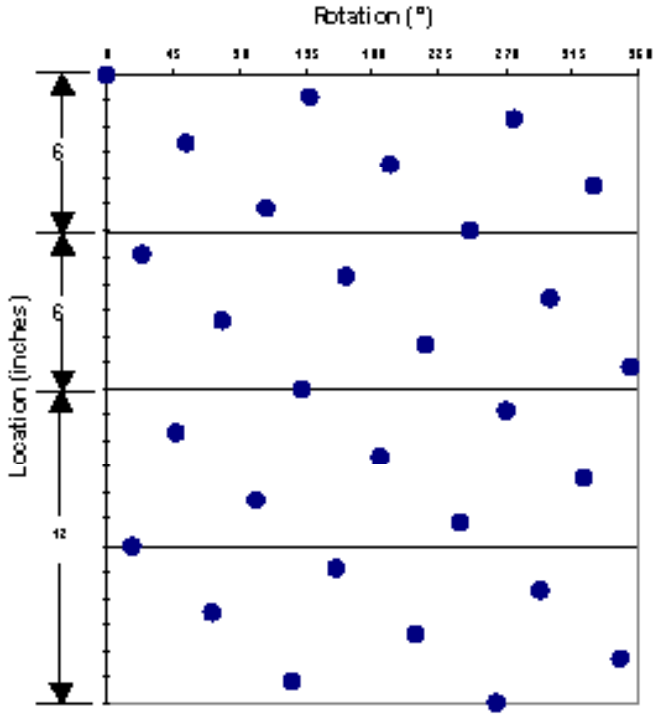

Shot Pattern for 7-in. 14-spf 138° Phasing

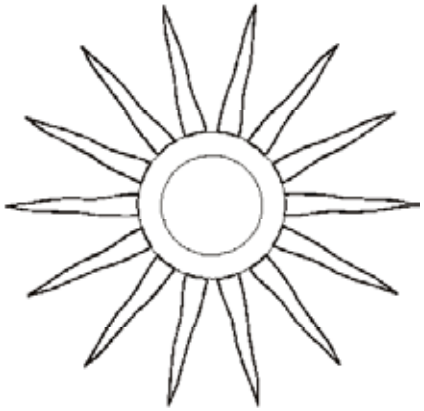

138° Phasing
14 Perforation Planes

VannGun™ Weights

Length ft (m)	4ft (1.22)	8 ft (2.44)	16 ft (4.88)
Loaded lb (kg)	164 (75)	336 (152)	678 (308)
Spacer lb (kg)	128 (58)	257 (117)	514 (233)

Ported Gun Perforating System

Jet Research Center's ported gun perforating systems provide users with economical, reusable guns for multi-purpose applications.

Applications

- Multi-zone shooting on a single run with select-fire subs
- Hostile environment
- Short guns available for squeeze applications

Features

- Charges are protected from well fluids, formation pressure and abrasion
- Debris retained in hollow carrier
- Carrier protects casing from detonation shock
- Charges for high-temperature environments available upon request
- Charges are tested to API standards
- Charges are designed to minimize internal damage to the gun body, prolonging life
- The gun design has minimized charge interference

Options

- 3 1/8-in. to 4-in. gun sizes
- Big hole and deep penetrating charges
- Port plugs are rated at 16,000 psi and 400 ^{o}F
- 90° and 120° phasing — other phase angles available upon request

Benefits

- Prolonged gun life and economical operations
- Proven reliable technology
- Reusable gun body allows economic operations

3 1/8-in. Ported Gun

Item	Description	Part No.
1	Carrier - 3 ft, 90° Phasing, 8 Shots	100014463
	Carrier - 7 ft, 90° Phasing, 24 Shots	100158070
	Carrier - 11 ft, 90° Phasing, 40 Shots	100158071
	Carrier - 3 ft, 120° Phasing, 8 Shots	100014464
	Carrier - 7 ft, 120° Phasing, 24 Shots	100014466
	Carrier - 11 ft, 120° Phasing, 40 Shots	100014466
2A	Top Sub - Halliburton, Q.C.	100014467
2B	Top Sub - JRC/Go Q.C.	100013305
3	O-ring, Buna 90 Duro #222 for item 2A	100009436
	O-ring, Buna 90 Duro #230 for item 2B	100002001
4	Tandem Sub	100158072
	Tandem Sub - S.F.	120022106
5	Bull Plug	100158073
6	Port Plug	100010850
7	Alignment Sleeve - 0.250 yellow	431663
	Alignment Sleeve - 0.325 dark gray	424841
	Alignment Sleeve - 0.375 red	431664
	Alignment Sleeve -0.422 green	354263
8	O-ring, Buna 90 Duro #228	100001999
	O-ring, Viton 95 Duro #228	100012311
9	Lead Wire Sleeve	100004159
10	Lead Wire - Stranded, 1,000 ft Yellow	100010600
10A	Lead Wire - Stranded *Teflon, 500 ft HT	100161099
10B	Lead Wire - Solid Red	100007892
11	Electric Connection - Pigtail	100004162
12	Contact Retainer - JRC Style	100013304
12A	Contact Retainer - Halliburton Style	100000615
13	Grounding Device	100000645
14	Charge - RDX, 12.0g, DP, 3 $^{1}/_{8}$ in. GS	101410556
15	Detonating Cord	See Appendix A
16A	RED® Block Detonator	101272580
16B	Fluid-Sensitive Block - Resistorized	100008089
16C	Fluid-Sensitive Detonator	100010578
17	Blast Sleeve	N/A
NS	Double Diode Assy. f/Dual Fire	100008218
	Split Dart	100004160
	Dart Retainer Nut	100004161
	Dart Seal Seat	100013306
	O-ring f/Seat	100015032
	Port Plug Wrench - 3 $^{1}/_{8}$ in. to 4 in. guns	100013453
	Thread Tap - $^{7}/_{8}$ in. x 12 f/3 $^{1}/_{8}$ in. to 4 in. guns	101001550
	Charge Loading Tool - 3 $^{1}/_{8}$ in. to 3 $^{3}/_{8}$ in. x 7 ft guns	100005497
	Charge Loading Tool - 3 $^{1}/_{8}$ in. to 3 $^{3}/_{8}$ in. x 11ft guns	100005496
	Alignment Sleeve Pliers	100146312
	Detonating Cord Cutter	100010823
	Nylon Seizing Cord	100010982
	Rubber Detonating Cord End Seal	100000652
	Aluminum End Seal	100005251
	Port Plug Air-Impact Wrench	100162428
	No-Gall Lubricant - 14 oz.	100142601
	Port Plug Extractor	100010356
	Lead Wire Threading Tool	101001503

NS Not Shown in Drawing
*Teflon is a trademark of E.I. Dupont De Nemours

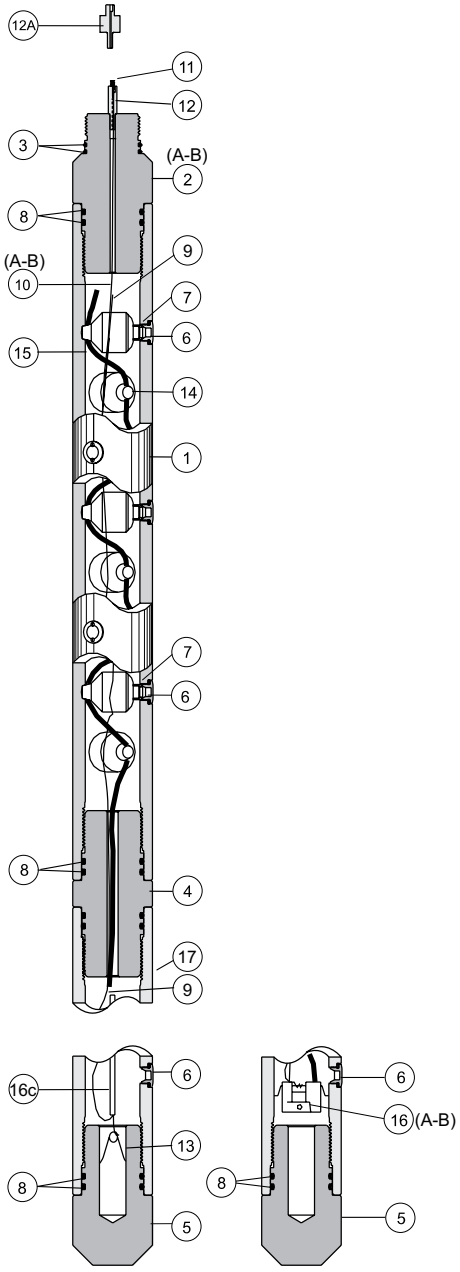

3 1/8-in. Ported Gun

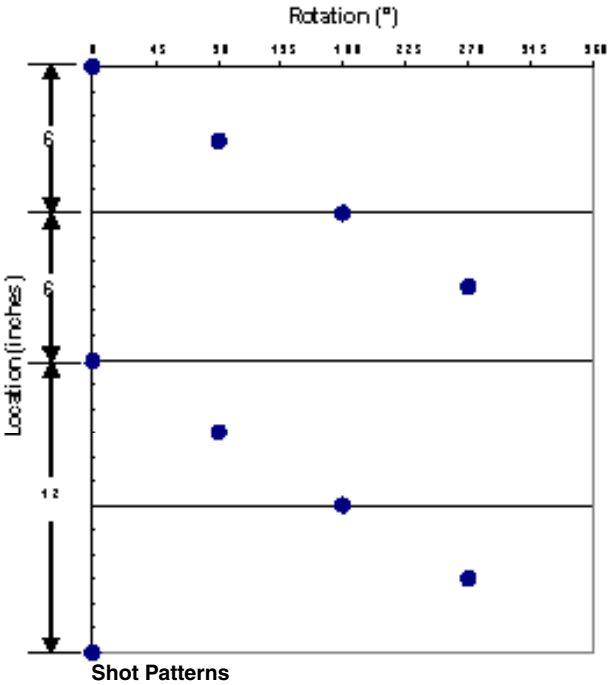

Shot Patterns
4-spf 90° Phasing

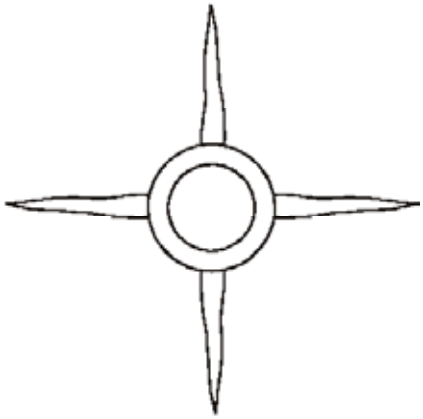

90° Phasing
4 Perforation Planes

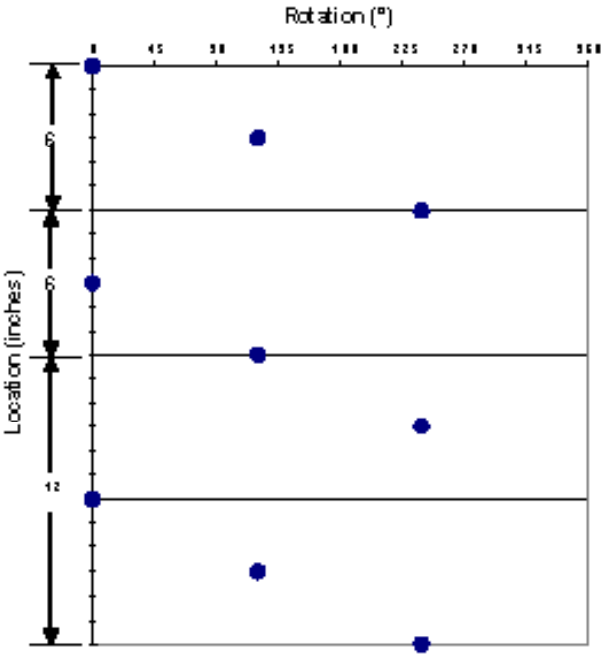

Shot Patterns
4-spf 120° Phasing

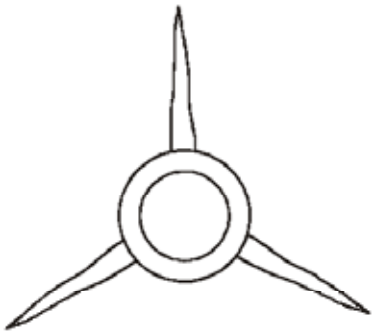

120° Phasing
3 Perforation Planes

4-in. Ported Gun

1	Carrier - 3 ft, 90° Phasing, 8 Shots	100009787
	Carrier - 7 ft, 90° Phasing, 24 Shots	100158081
	Carrier - 11 ft, 90° Phasing, 40 Shots	100158082
	Carrier - 3 ft, 120° Phasing, 8 Shots	100158083
	Carrier - 7 ft, 120° Phasing, 24 Shots	100014471
	Carrier - 11 ft, 120° Phasing, 40 Shots	100158084
2A	Top Sub - Halliburton, Q.C.	100158086
2B	Top Sub - JRC®, Q.C.	120133657
3	O-ring, Buna 90 Duro #222 for item 2A	100009436
	O-ring, Buna 90 Duro #230 for item 2B	100002001
4	Tandem Sub	100158087
	Tandem Sub - Select Fire	100141956
5	Bull Plug	100158088
6	Port Plug - Long Alpha Style	100008123
	Port Plug - Short Titan Style	101292064
7	Alignment Sleeve - 0.422 green	354263
	Alignment Sleeve - 0.530 blue	349454
	Alignment Sleeve - 0.600 white	349456
	Alignment Sleeve - 0.625 red	349458
8	O-ring, Buna 90 Duro #335	100001964
	O-ring, Viton 95 Duro #335	100064840
9	Lead Wire Sleeve	100004159
10	Lead Wire - Stranded, 1,000 ft Yellow	100010600
10A	Lead Wire - Stranded Teflon, 500 ft HT	100161099
10B	Lead Wire - Solid Red	100007892
11	Electric Connection - Pigtail	100004162
12	Contact Retainer - JRC® Style	100013304
12A	Contact Retainer - Halliburton Style	100000615
13	Grounding Device	100000645
*14	Charge - RDX, 19.5g, DP, 4 in. GS	101288857
15	Detonating Cord	See Appendix A
16A	Red Block Detonator	101272580
16B	Fluid Sensitive Block	100008089
16C	Fluid Sensitive Detonator	100010578
17	Blast Sleeve	564374
NS	Double Diode Assy f/Dual Fire	100008218
	Split Dart	100004160
	Dart Retainer Nut	100004161
	Dart Seal Seat	100013306
	O-ring f/Seat	100015032
	Port Plug Wrench - 3 $^{1}/_{8}$ in. to 4 in. guns	100013453
	Thread Tap - $^{7}/_{8}$ in. x 12 f/3 $^{1}/_{8}$ in. to 4 in. guns	101001550
	Charge Loading Tool - 4 in. x 7 ft	100014496
	Charge Loading Tool - 4 in. x 11 ft	100014495
	Alignment Sleeve Pliers	100146312
	Detonating Cord Cutter	100010823
	Nylon Seizing Cord	100010982
	Rubber Detonating Cord End Seal	100000652
	Aluminum End Seal	100005251
	Port Plug Air-Impact Wrench	100162428
	No-Gall Lubricant - 14 oz.	100142601
	Port Plug Extracotr	100010356
	Lead Wire Threading Tool	101001503

NS Not Shown in Drawing
*Teflon is a trademark of E.I. Dupont De Nemours
**Charge Uses Industry Standard Washer

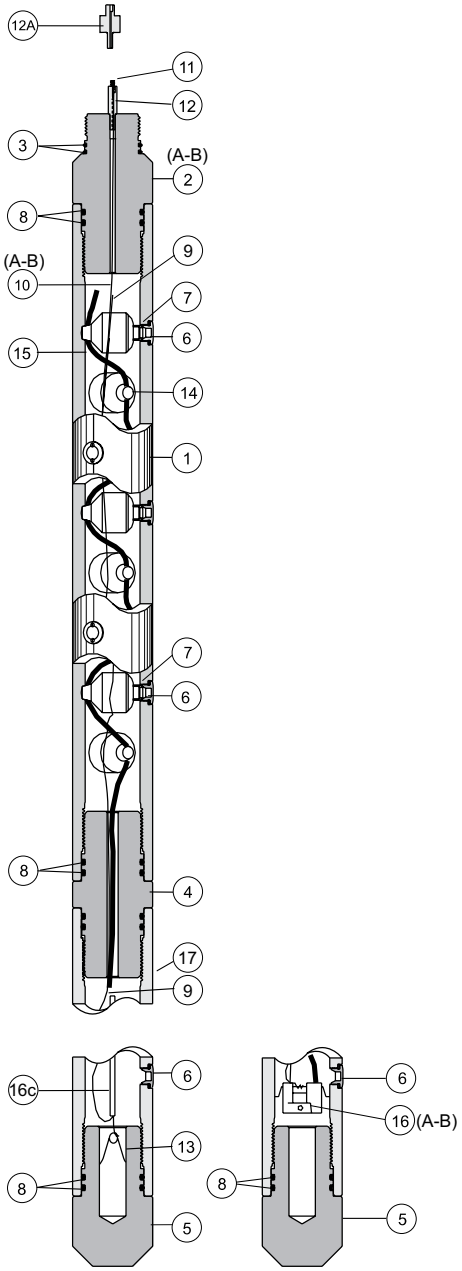

4-in. Ported Gun

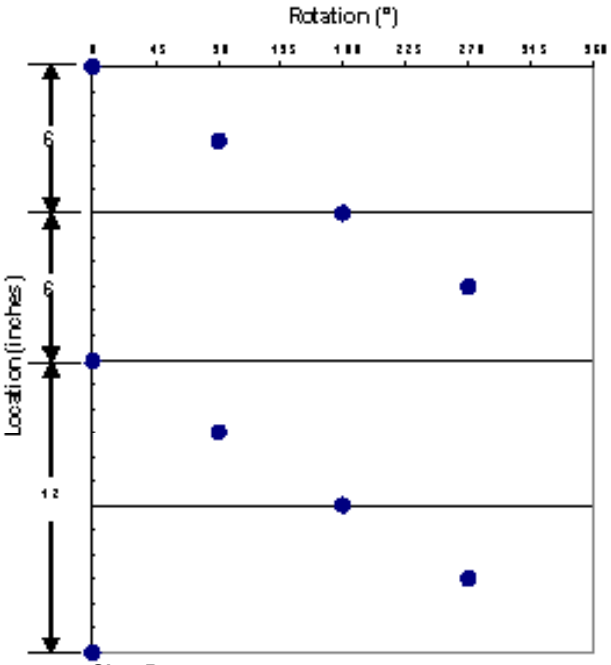

Shot Patterns
4-spf 90° Phasing

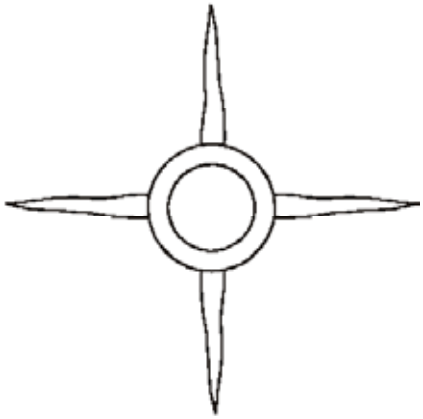

90° Phasing
4 Perforation Planes

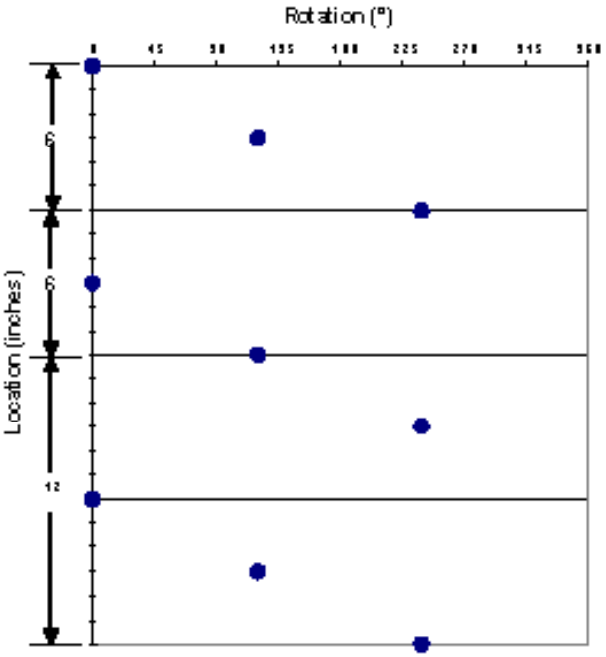

Shot Patterns
4-spf 120° Phasing

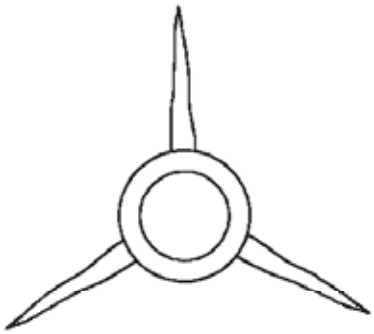

120° Phasing
3 Perforation Planes

Jet Research Center's offers a variety of Capsule Perforating Systems, which are generally used for underbalanced through-tubing perforating applications. Several systems offered are in the second and third generations of development. This section provides information concerning the following Capsule Gun Perforating Systems:

- Multiphased Dyna-Cap™ Formed Bi-Wire
- Dyna-Cap Four-Wire Capsule Gun
- Dyna-Star™ Perforating Systems
- Deep-Star™ Perforating Systems

Multiphased Dyna-Cap™ Formed Bi-Wire Capsule Gun

Jet Research Center's high-performance, multi-phased Dyna-Cap™ Formed Bi-Wire Capsule Gun charge is incorporated into an ultra-flexible carrier system for improved perforating performance in well conditions where hollow-carrier and link-type equipment normally cannot operate.

Features

- Flexible carrier assembly
- Steel case construction
- Patented design of the Dyna-Cap charge and flexible carrier allows 0° phasing of the charges at up to 6-spf and 180° phasing at up to 4-spf
- Carrier assemblies that can be run in a single length of up to 50 ft or modified into shorter gun sections as required
- Pressure rating up to 15,000 psi
- Temperature rating up to 400 °F
- 6-spf --- 300 shots on one continuous gun with no modification
- Interchangeable firing head and guide sub for both 1 11/16-in. and 2 1/8-in charges
- Uses same charges as Dyna-Strip™ Perforating Systems if the patented nut design is installed on the charge

Benefits

- Carrier assembly flexibility increases accurate accessibility to the zone to be perforated during run-in
- Steel case construction enhances shot performance and provides extra protection while it is run in highly deviated or restricted wells
- Economical operation

Multiphased Dyna-Cap™ Formed Bi-Wire Capsule Gun

1 11/16-in. Multiphase Dyna-Cap™ (Formed Bi-Wire) Capsule Gun

Item	Description	Part No.
1	Formed Wire Carrier - 4 spf, 50 ft	100005451
	Formed Wire Carrier - 6 spf, 50 ft	100000377
*2	Firing Head - 1 $^{3}/_{16}$ x 12 Box	100008044
*3	Bottom Guide Sub	100158282
4	Wire Clamp	100158078
5	Cap Screw -0.38 in. -16 x 0.88 in.	100158080
6	Hex Nut - 0.38 in. - 16 UNC-2B	100163467
7	SST Band	100007501
8	Lead Wire - 500 ft	100007892
9	Seizing Cord - 1,500 ft	100010982
10	Rubber End Seal	100000652
11	Charge Nut (1 per Charge)	100014470
12	Charge - RDX, 13.5 g, Dyna-Star™, 1 $^{11}/_{16}$ in.	100005450
	Charge - HMX, 13.5 g, Dyna-Star™, 1 $^{11}/_{16}$ in.	100005449
13	Detonator	See Det. Section
14	Detonating Cord	See Appendix A
NS	SST Band Installation Tool (Panduit)	100158236

*Requires items 4, 5, and 6
NS Not Shown in Drawing

1 11/16-in. Multiphase Dyna-Cap (Formed Bi-Wire)

Item	Description	Part No.
1	Formed Wire Carrier - 4 spf, 50 ft	101001756
*2	Firing Head - 1 $^{3}/_{16}$ x 12 Box	100008044
*3	Bottom Guide Sub	100158282
4	Wire Clamp	100158078
5	Cap Screw - 0.38 in. -16 x 0.88 in.	100158080
6	Hex Nut - 0.38 in. -18 UNC - 2B	100163467
7	SST Band	100007501
8	Lead Wire - 500 ft	100007892
9	Seizing Cord - 1,500 ft	100010982
10	Rubber End Seal	100000652
11	Charge Nut (1 per Charge)	100158077
12	Charge - RDX, 15.5 g, Dyna-Star™, 2 $^{1}/_{8}$ in.	100005448
	Charge - HMX, 15.5 g, Dyna-Star™, 2 $^{1}/_{8}$ in.	100008259
13	Detonator	See Det. Section
14	Detonating Cord	See Appendix A
NS	SST Band Installation Tool (Panduit)	100158236

*Requires items 4, 5, and 6
NS Not Shown in Drawing

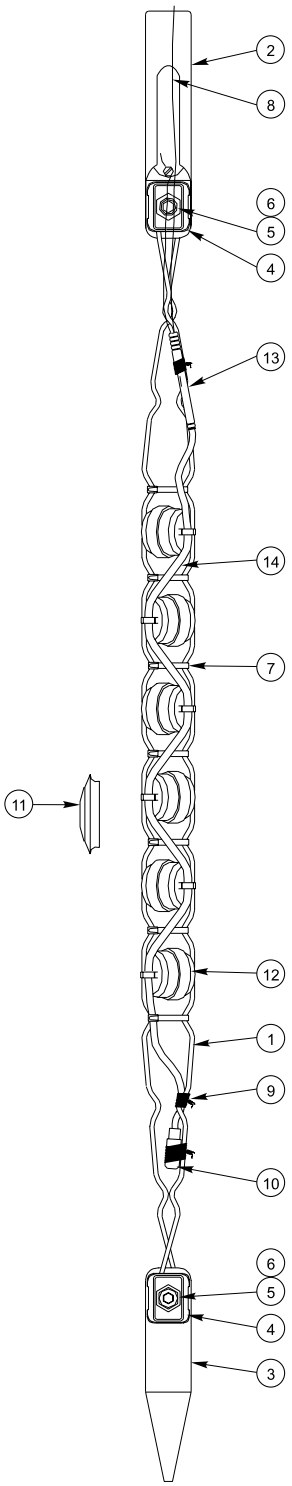

Multiphased Dyna-Cap™ Capsule Gun

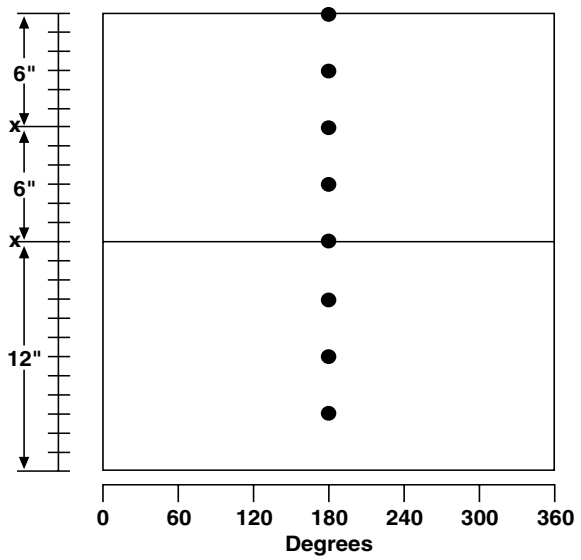

1 $^{11}/_{16}$-in. and 2 $^{1}/_{8}$-in.
4-spf 0° Phasing

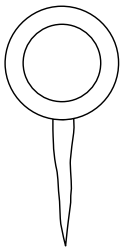

0° Phasing
1 Perforation Plane

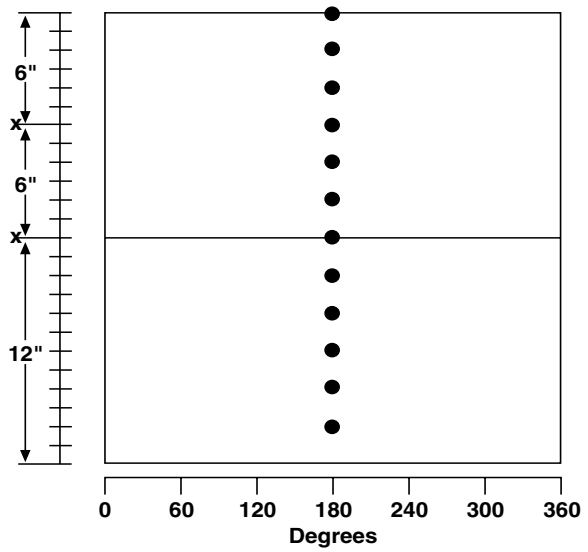

1 $^{11}/_{16}$-in. and 2 $^{1}/_{8}$-in.
6-spf 0° Phasing

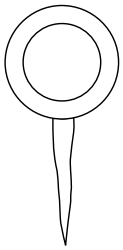

0° Phasing
1 Perforation Plane

Multiphased Dyna-Cap™ Formed Bi-Wire Capsule Gun

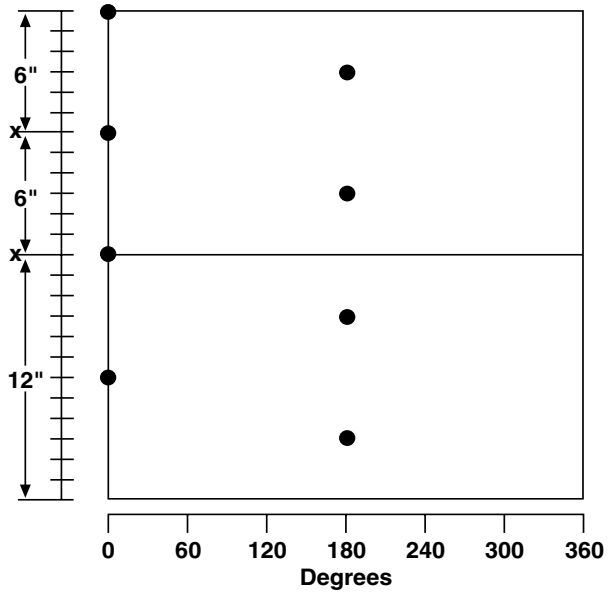

1 $^{11}/_{16}$-in. and 2 $^{1}/_{8}$-in.
4-spf 180° Phasing

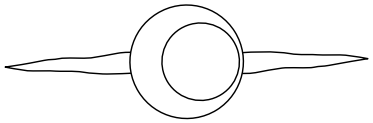

180° Phasing
2 Perforation Planes

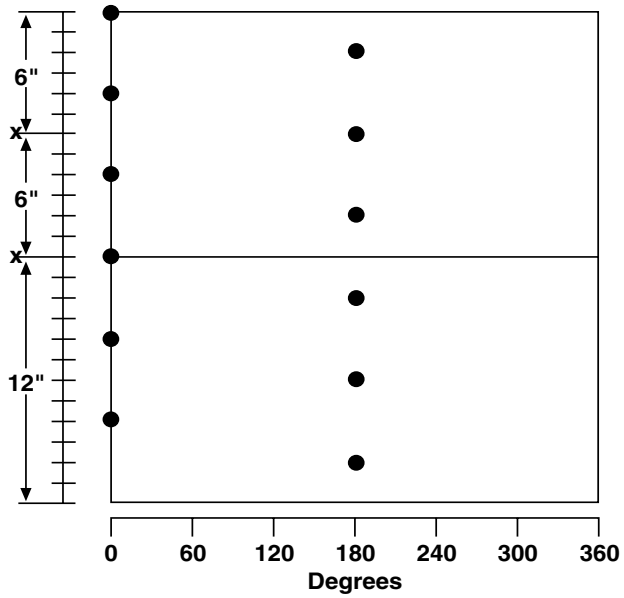

1 $^{11}/_{16}$-in. and 2 $^{1}/_{8}$-in.
6-spf 180° Phasing

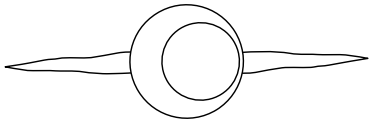

180° Phasing
2 Perforation Planes

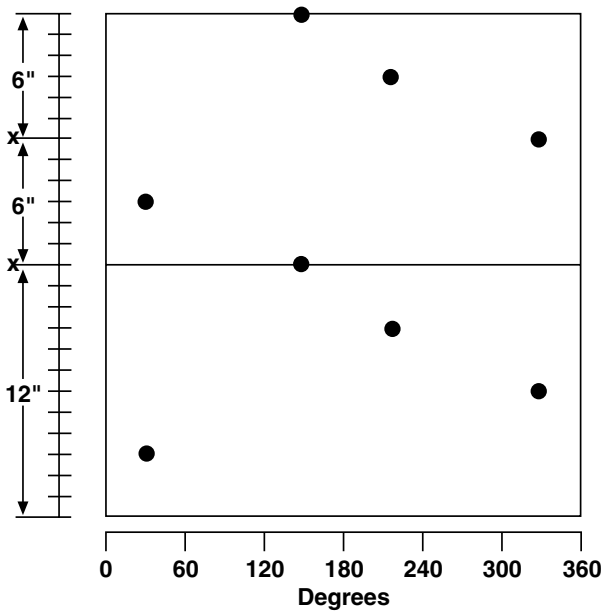

2 $^1/_8$-in.
4-spf 62°/117° Phasing

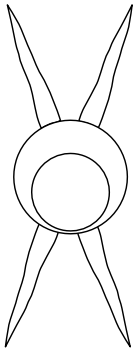

62°/117° Phasing
4 Perforation Planes

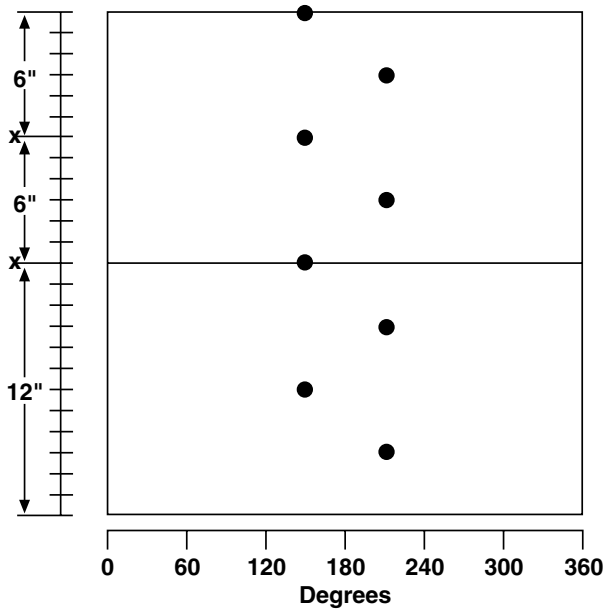

2 $^1/_8$-in.
4-spf 63° Phasing Downside

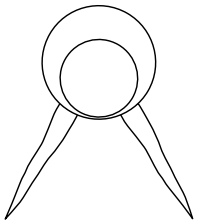

63° Phasing
2 Perforation Planes

Dyna-Cap™ Four-Wire Capsule Gun

Jet Research Center's Dyna-Cap™ Four-Wire Capsule Gun is an economical, second-generation capsule perforating system. This system is partially expendable and uses four formed wires in its through-tubing technology.

Applications

- 2 1/8-in. and 1 11/16-in. gun systems, at 4-spf and 6-spf
- 1 11/16-in. system rated at 14,000 psi, and up to 370 °F (HMX version) in dry gas or fluid
- 2 1/8-in. system rated at 15,000 psi, and up to 370 °F (HMX version) in dry gas or fluid
- Not recommended for hostile environments

Features

- Deep penetrating charges
- Uses same charges as the Dyna-Star™ strip gun
- Available in two phasings: 0° and 180° at 4-spf and 0° at 4-spf
- Complete interval coverage with cut-to-length wire, which minimizes wire deformation, allowing easy retrieval

Benefits

- Selective fire capacity (up to two guns)
- Economical operation
- Continuous gun - no joints or splices
- Wire lengths up to 50 ft
- Ease of gun retrieval after shooting

1 11/16-in. Dyna-Cap™ Four-Wire

Item	Description	Part No.
1	Formed Wire Carrier - 4 spf, 50 ft	100005451
	Formed Wire Carrier - 6 spf, 50 ft	100000377
*2	Firing Head - 1 $^{3}/_{16}$ x 12 Box	100008044
*3	Bottom Guide Sub	100158282
4	Wire Clamp	100158078
5	Cap Screw - 0.38 in. - 16 x 0.88 in.	100158080
6	Hex Nut - 0.38 in. - 16 UNC-2B	100163467
7	Hog Ring	100000435
7A	SST Band (Optional)	100007501
9	Seizing Cord - 1,500 ft	100010982
10	Rubber End Seal	100000652
11	Charge Nut (1 per Charge)	100014470
12	Charge - RDX, 13.5 g, Dyna-Star™, 1 $^{11}/_{16}$ in.	100005450
	Charge - HMX, 13.5 g, Dyna-Star™, 1 $^{11}/_{16}$ in.	100005449
13	Detonator	See Det. Section
14	Detonating Cord	See Appendix A
NS	Hog Ring Pliers	100008059
	Leadwire	100007892
	SST Band Installation Tool (Panduit)	100158236

*Requires Items 4, 5, and 6
NS Not Shown in Drawing

2 1/8-in. Multiphase Dyna-Cap Four Wire

Item	Description	Part No.
1	Formed Wire Carrier - 4 spf, 50 ft	101001756
	Formed Wire Carrier - 6 spf, 50 ft	100000377
*2	Firing Head - 1 $^{3}/_{16}$ x 12 Box	100008044
*3	Bottom Guide Sub	100158282
4	Wire Clamp	100158078
5	Cap Screw -0.38 in. - 16 x 0.88 in.	100158080
6	Hex Nut - 0.38 in. - 16 UNC-2B	100163467
7	Hog Ring	‘100000435
7A	SST Band (Optional)	100007501
9	Seizing Cord - 1,500 ft	100010982
10	Rubber End Seal	100000652
11	Charge Nut (1 per Charge)	100158077
12	Charge - RDX, 15.5 g, Dyna-Star™, 2 $^{1}/_{8}$ in.	100005448
	Charge - HMX, 15.5 g, Dyna-Star™, 2 $^{1}/_{8}$ in.	100008259
13	Detonator	See Det. Section
14	Detonating Cord	See Appendix A
NS	Hog Ring Pliers	100008059
	Lead wire	100007892
	SST Band Installation Tool (Panduit)	100158236

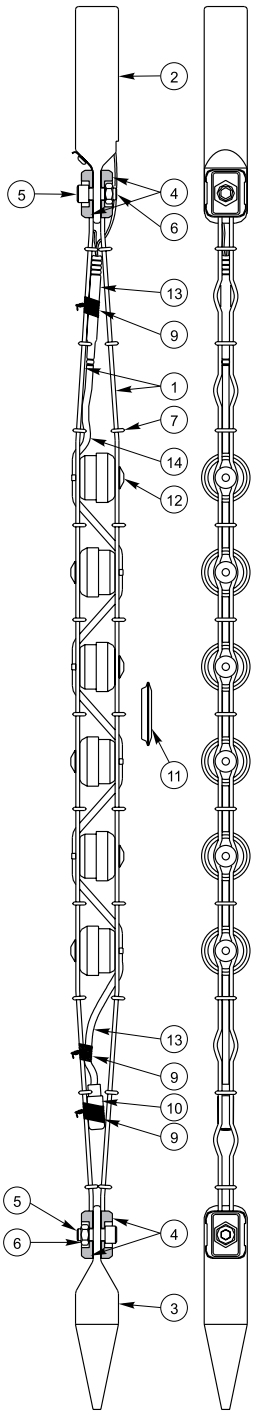

Dyna-Cap™ Four-Wire Capsule Gun

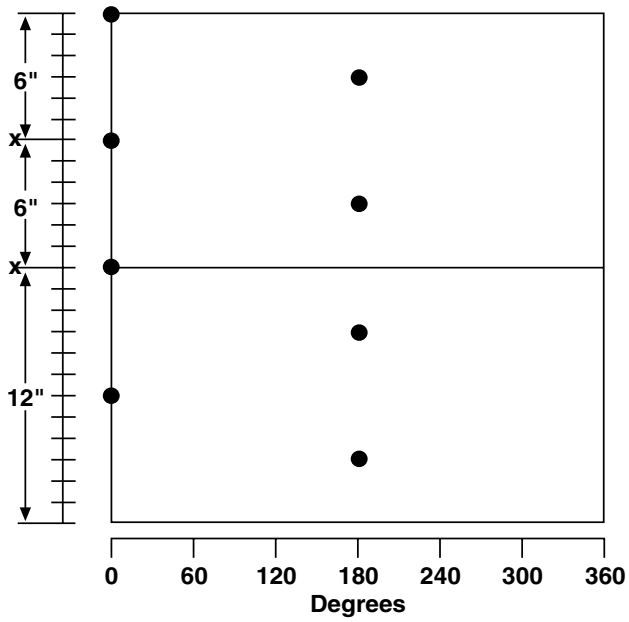

1 $^{11}/_{16}$-in. and 2 $^{1}/_{8}$-in.
4-spf 180° Phasing

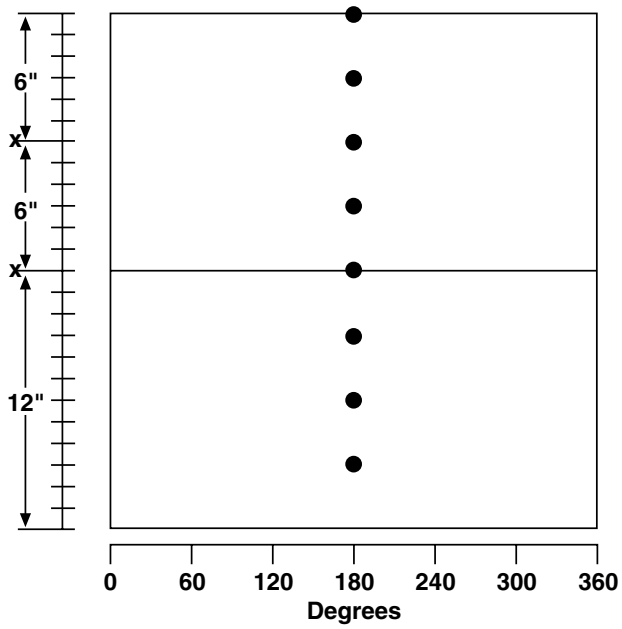

1 $^{11}/_{16}$-in. and 2 $^{1}/_{8}$-in.
4-spf 0° Phasing

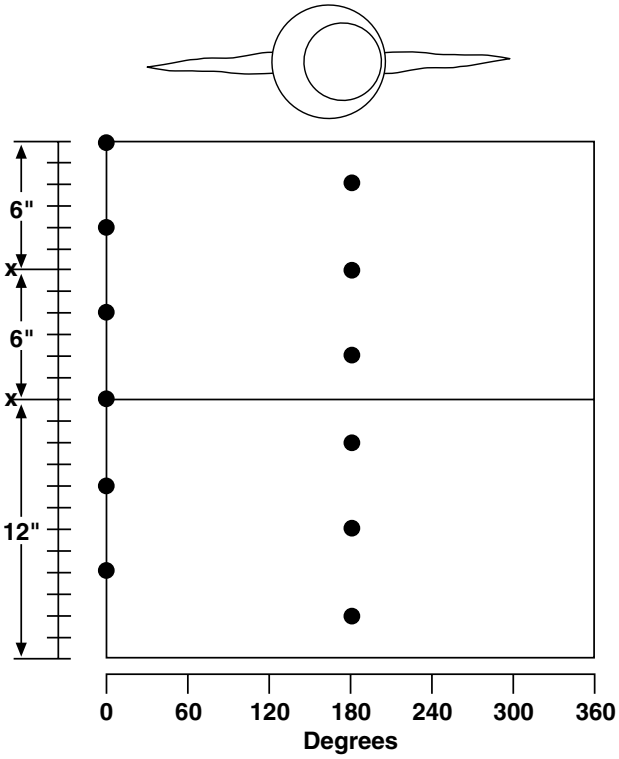

1 $^{11}/_{16}$-in. and 2 $^{1}/_{8}$-in.
6-spf 180° Phasing

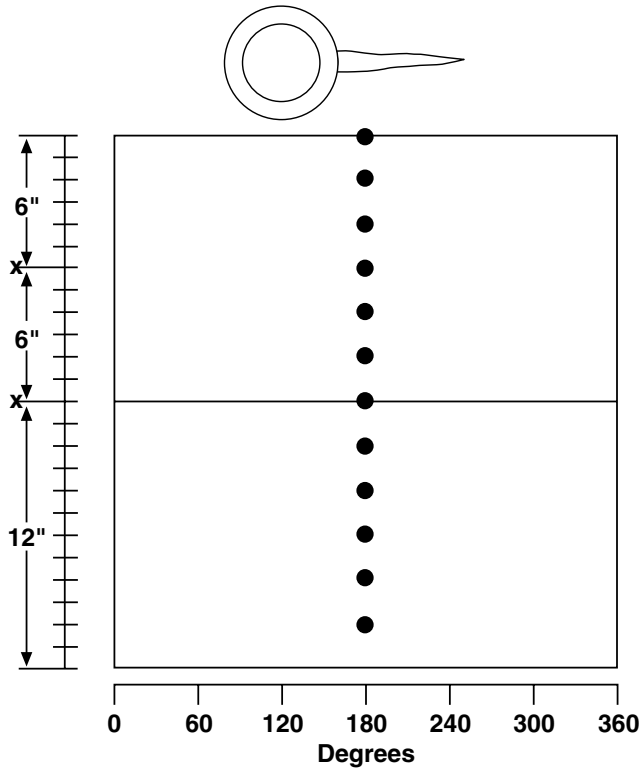

1 $^{11}/_{16}$-in. and 2 $^{1}/_{8}$-in.
6-spf 0° Phasing

Jet Research Center's Dyna-Star™ Capsule Gun is an economical, second-generation capsule perforating system. This system is partially expendable and uses a stainless steel strip in its through-tubing technology.

Applications

- 2 1/8-in. and 1 11/16-in. gun systems, at 4-spf and 6-spf
- 1 11/16-in. system rated at 14,000 psi, and up to 370 °F (HMX version) in dry gas or fluid
- 2 1/8-in. system rated at 15,000 psi, and up to 370 °F (HMX version) in dry gas or fluid
- Rated up to 370 °F (HMX version) in dry gas or fluid - may be used in hostile environments only if special precautions are taken. Contact JRC for more information.

Features

- Deep penetrating charges
- Uses same charges as the Dyna-Cap Four-Wire strip gun to minimize inventory
- Available in 0° phasing
- Rollover sleeves keep the gun in its optimum orientation.
- Guns can be cut to required length in the field.

Benefits

- Selective fire capacity (up to two guns)
- Economical operation
- System can use 18-ft long strips without tandem
- Ease of gun retrieval after shooting

1 11/16-in. Dyna-Star™ 4 and 6-spf Perforating System

Item	Description	Part No.
1	Carrier Strip - 18 ft, 4 spf	100005502
	Carrier Strip - 18 ft, 6 spf	100005503
	Carrier Strip - 12 ft, 4 spf	100008256
	Carrier Strip - 12 ft, 6 spf	100008030
2	Firing Head Assy. - 1 $^{3}/_{16}$ x 12 Box	100005507
3	Bottom Sub Guide	100005508
*4	Bolt	100008060
5	Detonating Cord Protector Kit w/Bolt	100005419
6	Rollover Sleeve	100005483
7	Detonating Cord Retainer	100011538
8	Charge - Dyna-Star™, RDX	100005450
	Charge - Dyna-Star, HMX	100005449
11	Rubber End Seal	100000652
12	Nylon Seizing Cord (1,500 ft)	100010982
13	Tandem Plate for 4 spf	100157575
14	Tandem Plate for 6 spf	100157574
*15	Charge Nut	100014470
NS	Charge Installation Tool	100008267

*Four each required for tandem; two each per Bottom Sub Guide

NS Not Shown in Drawing
Note: Make tandem strip by cutting 1 ft. section from Dyna-Star™ Strip Carriers

2 1/8-in. Dyna-Star 4 and 6-spf Perforating System

Item	Description	Part No.
1	Carrier Strip - 18 ft, 4 spf	100005509
	Carrier Strip - 18 ft, 6 spf	100008269
	Carrier Strip - 12 ft, 4 spf	100005416
	Carrier Strip - 12 ft, 6 spf	100014439
2	Firing Head Assy.	100014498
3	Bottom Sub Guide	100008270
*4	Bolt	100005510
5	Detonating Cord Protector	100005418
6	Rollover Sleeve	100005484
7	Detonating Cord Retainer w/Bolt	100011538
8	Charge - Dyna-Star™, RDX	100005448
	Charge - Dyna-Star™, HMX	100008259
11	Rubber End Seal	100000652
12	Nylon Seizing Cord (1,500 ft)	100010982
13	Tandem Plate for 4 spf	100157569
14	Tandem Plate for 6 spf	100157570
NS	Charge Installation Tool	100005485

* Four each required for tandem; two each per Bottom Sub Guide
NS Not Shown in Drawing
Note: Make tandem strip by cutting 1 ft. section from Dyna-Star™ Strip Carriers

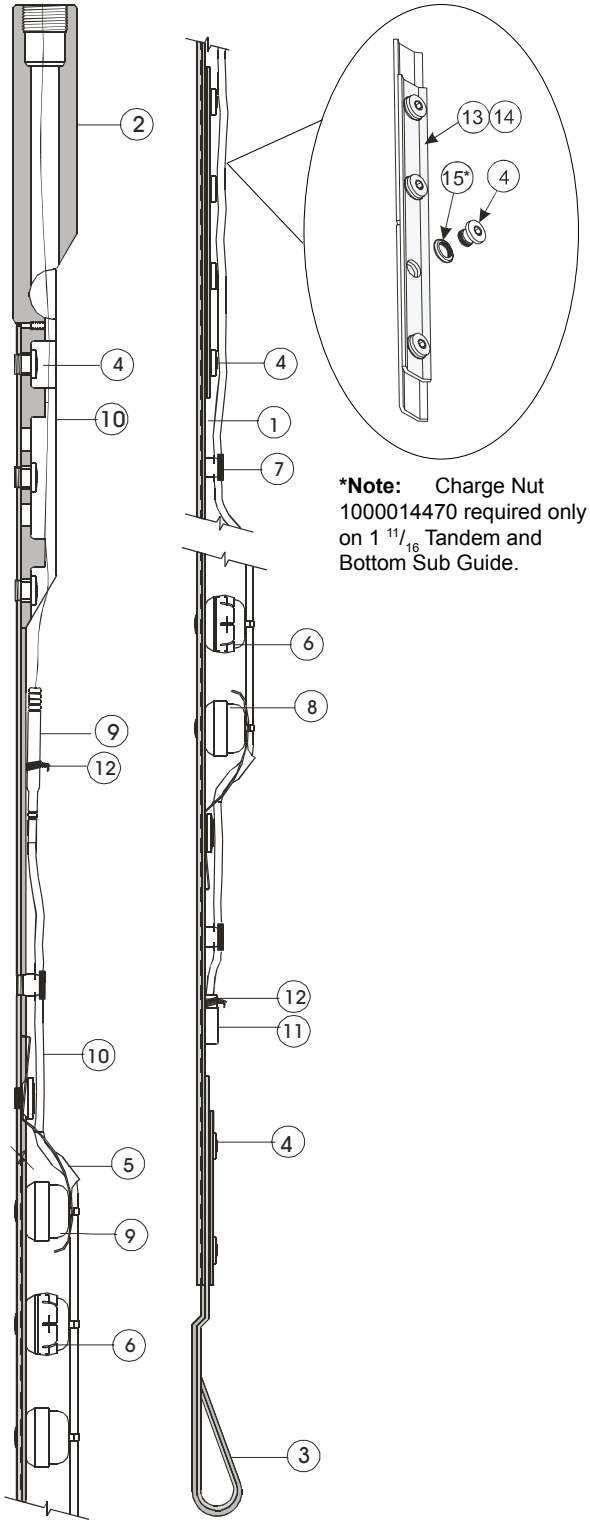

***Note:** Charge Nut 1000014470 required only on 1 $^{11}/_{16}$ Tandem and Bottom Sub Guide.

Dyna-Star™ Capsule Gun

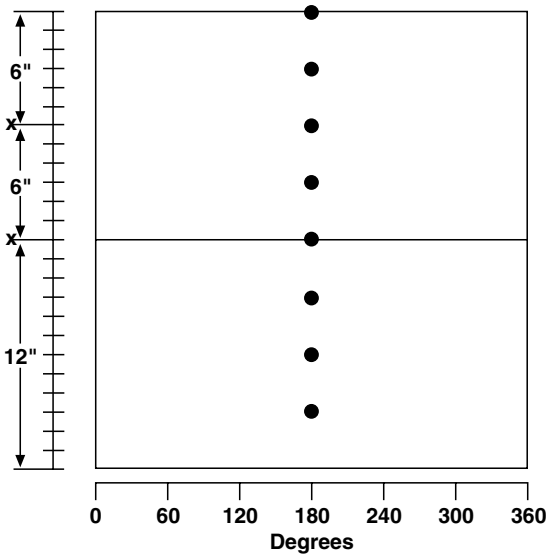

1 $^{11}/_{16}$-in. and 2 $^{1}/_{8}$-in.
6-spf 0° 1 Phasing

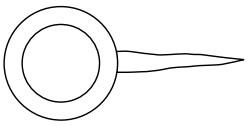

0° Phasing
1 Perforation Plane

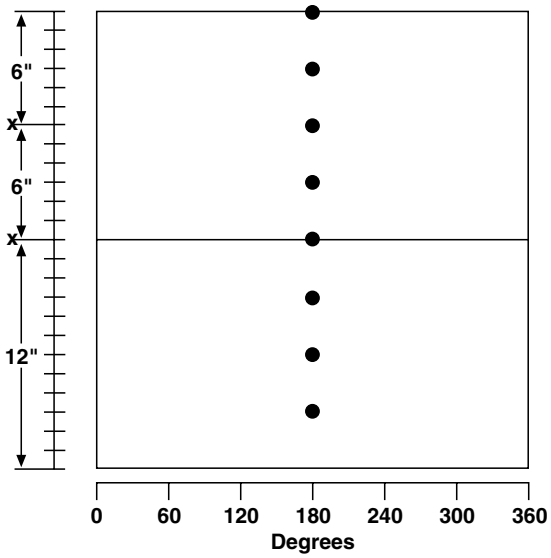

1 $^{11}/_{16}$-in. and 2 $^{1}/_{8}$-in.
4-spf 0° Phasing

Jet Research Center's Deep-Star™ Perforating System is a third-generation, state-of-the-art, through-tubing capsule perforating system with improved charge performance and running characteristics.

Applications

- 2 1/8-in. and 1 11/16-in. OD gun systems
- Rated at 15,000 psi and 350°F in dry gas, fluid or hostile environments
- Higher ratings are available upon request
- The Deep-Star™ system is designed for deep, high temperature, high pressure wells

Features

- Extremely deep penetrating charges
- Higher shot densities without charge interference (up to 8-spf with the 1 11/16-in. system-patent pending) attained using hydrodynamic modeling techniques
- Most are available in seven phasings: 0°, 90° downside, 90° spiral, Triphase (patented), Penta-phase, Heptaphase, and Octaphase
- Compatible interval coverage with the innovative "gull-wing" tandem (patent), which minimizes strip deformation, allowing easier retrieval
- Hardware offset in conjunction with charge center gravity to optimize gun stability and orientation

Benefits

- Selective fire capability (up to two guns)
- Corrosion-resistant steel alloy charge cases and carrier strips permit the use of the Deep-Star™ system in hostile environments
- No gaps in shot pattern at joints in strips
- Ease of gun removal after shooting

1 11/16-in. and 2 1/8-in. Deep-Star™ Debris Fill Data

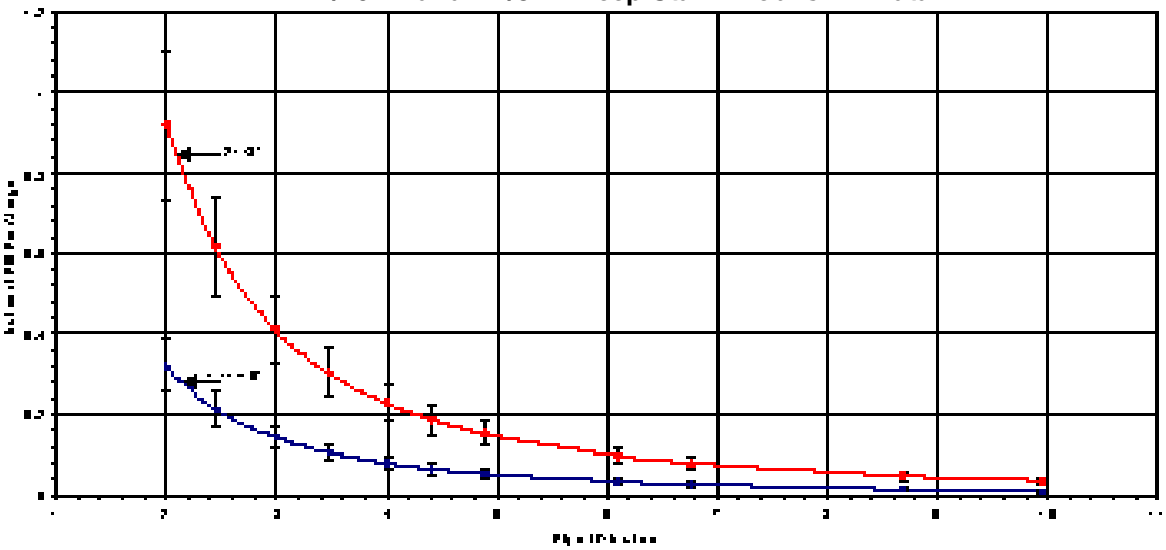

Deep-Star Fill Data (Shot in water)

Pipe O.D.	Pipe Weight	Pipe I.D.	Fill per 1 11/16-in. Change		Fill Per 2 1/8-in. Change	
Inches	Pounds/Foot	Inches	Inches	mm	Inches	mm
2 3/8	4.7 lb/ft	1.995	0.322	8.17	0.920	23.37
2 7/8	6.5 lb/ft	2.441	0.215	5.45	0.615	15.61
3 1/2	9.3 lb/ft	2.992	0.143	3.63	0.409	10.39
4	11.0 lb/ft	3.476	0.106	2.69	0.303	7.70
4 1/2	11.6 lb/ft	4.000	0.080	2.03	0.229	5.81
5	15.0 lb/ft	4.408	0.066	1.67	0.188	4.79
5 1/2	17.0 lb/ft	4.892	0.053	1.36	0.153	3.89
7	32.0 lb/ft	6.094	0.034	0.88	0.099	2.50
7 5/8	33.7 lb/ft	6.765	0.028	0.71	0.080	2.03
9 5/8	47.0 lb/ft	8.681	0.017	0.43	0.049	1.23

Notes:
1. Fill data is approximate.
2. When shot in gas, the debris is smaller and will occupy less volume.

Zero Phase

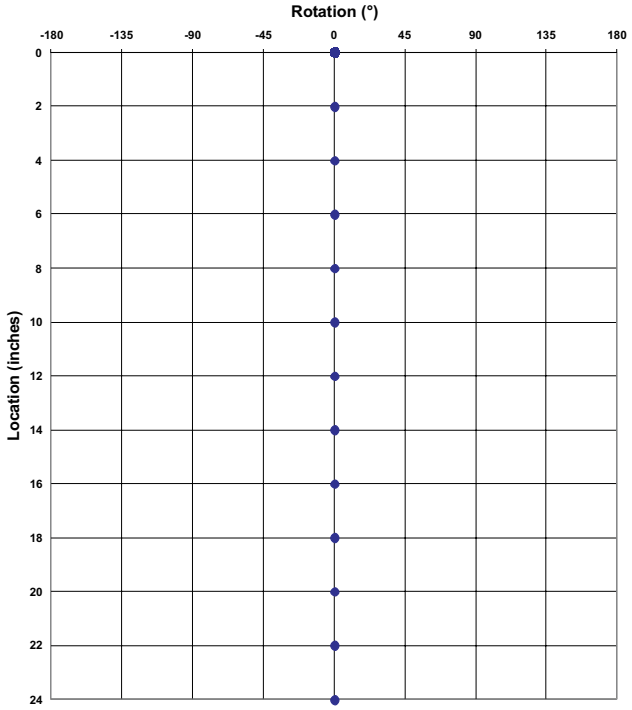

Biphase

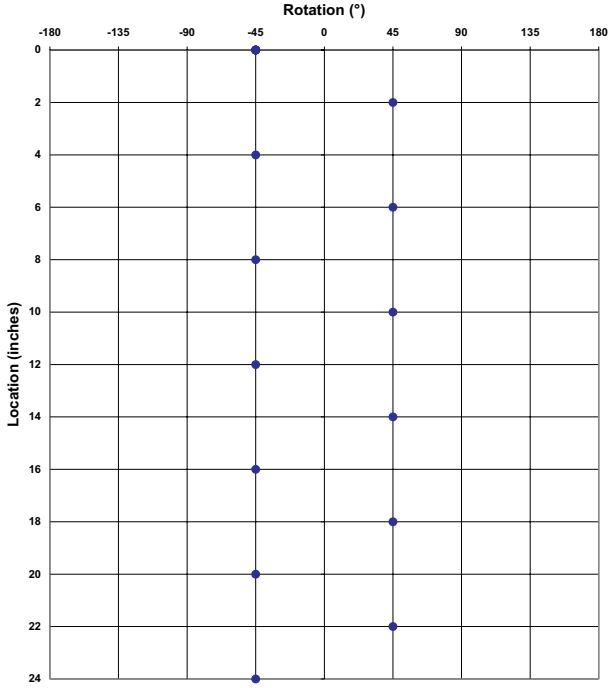

Triphase Spiral

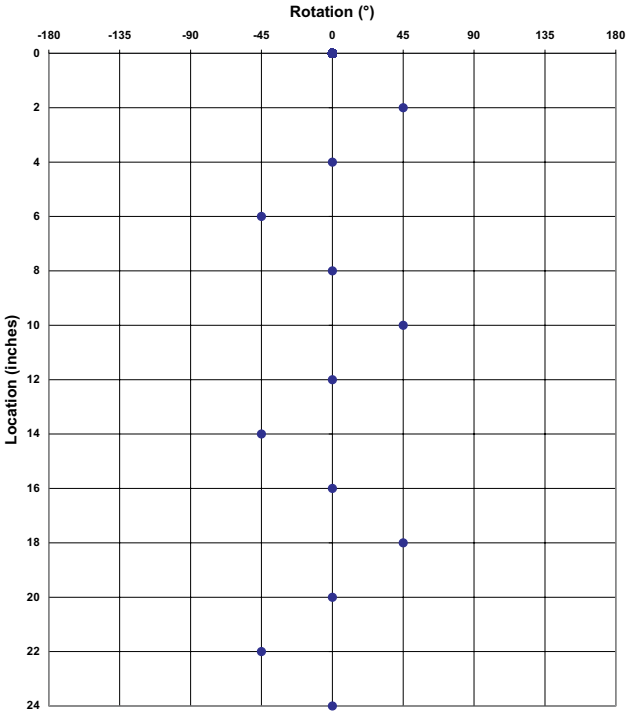

90° Spiral

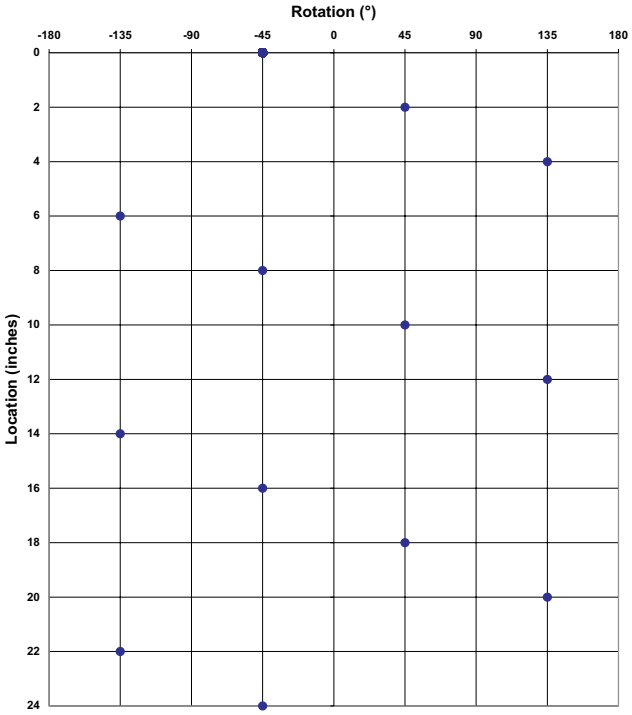

Pentaphase Oscillating Spiral

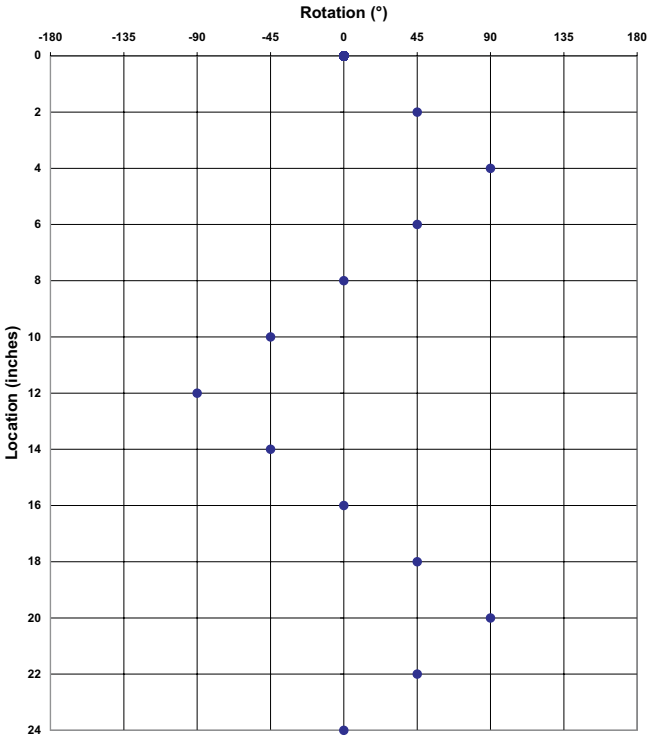

Hetaphase Oscillating Spiral

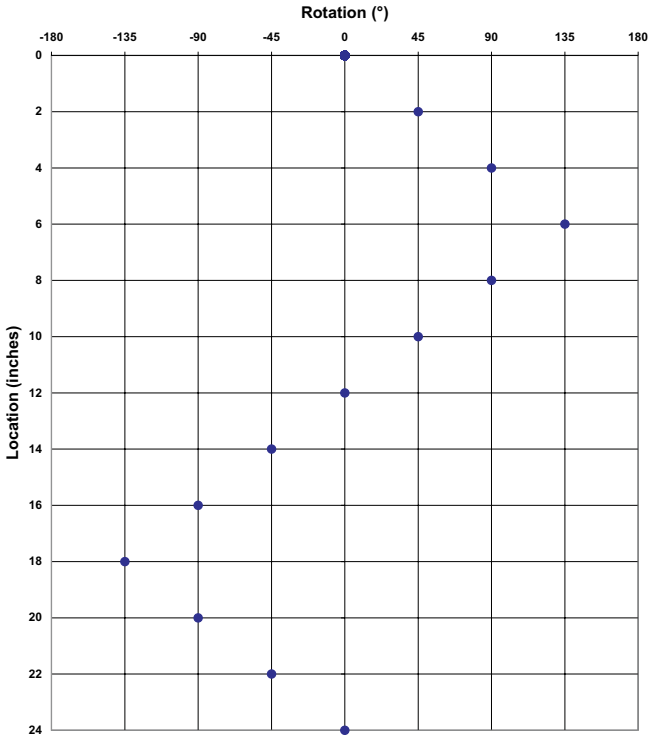

Octaphase Spiral

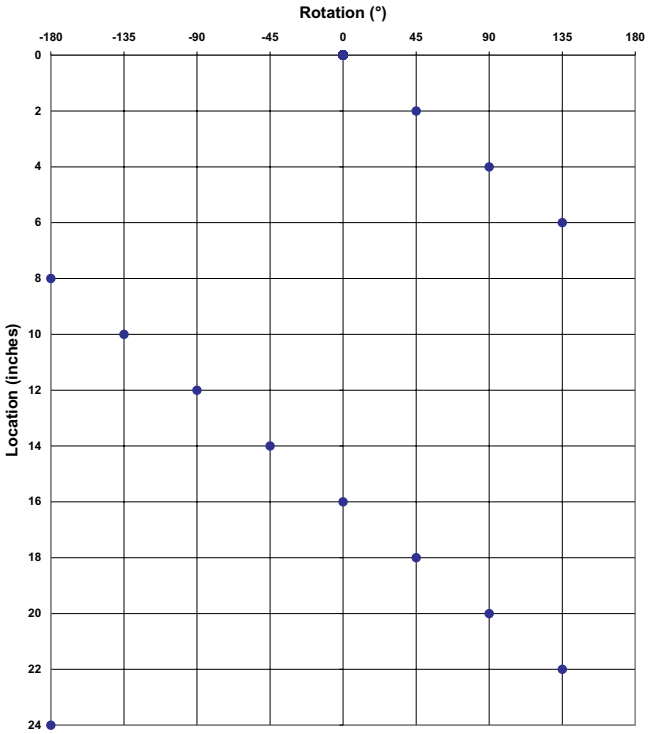

Deep-Star™ Phasings and Shot Densities

1 $^{11}/_{16}$-in. OD				
Phasing				
	Shots per foot	Shots per Meter	Shots per Foot	Shots per Meter
0°	Up to 8	Up to 26.2	4, 6, 8	13, 19.7, 26.2
Triphase	6, 6.6	19.7, 21.7	6, 6.6	19.7, 21.7
114° Downside	2 or 4	6.6, 13.1	4	13.1
Pentaphase	5.8	19	5.8	19

2 $^{1}/_{18}$-in. OD				
Phasing	Shot Densities		Available Strips	
	Shots per foot	Shots per Meter	Shots per Foot	Shots per Meter
0°	Up to 6	Up to 19.7	4, 6	13.1, 19.7
Triphase	6	19.7	6	19.7
114° Downside	2 or 4	6.6, 13.1	4	13.1
90° Spiral	4	13.1	4	13.1
Pentaphase	5.8	19	5.8	19
Heptaphase	5.8	19	5.8	19
Octaphase 45° Spiral	5.8	19	5.8	19

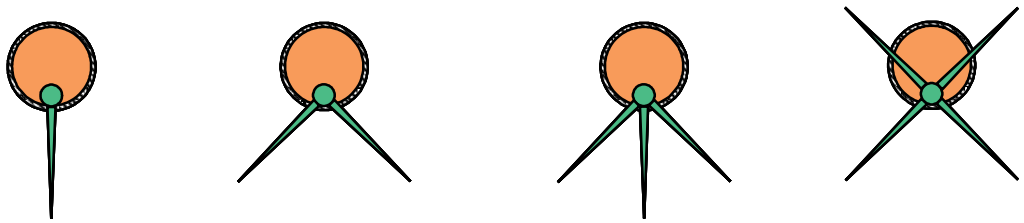

Zero Phase **Biphase** **Triphase** **90° Spiral**

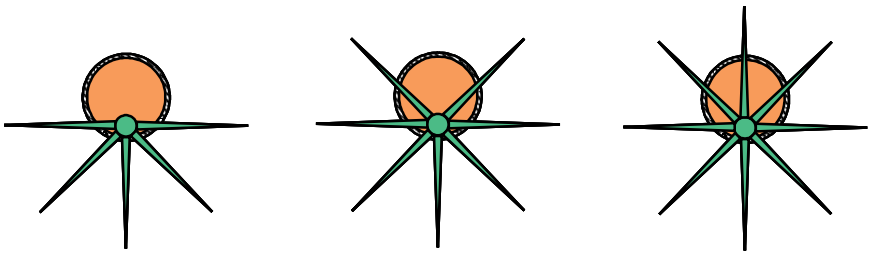

Pentaphase **Heptaphase** **Octaphase Spiral**

Phasings and Shot Densities

Deep-Star™ Assembly Tools List

Item	Part No.	Description	1 11/16 in.	2 1/8 in.	Zero	Tri	Down	90° Spiral	Penta	Hepta	Octa
	100009587	Charge Orienting Socket Assembly, 2 1/8”		x	x	x	x	x	x	x	x
	100014503	Charge Orienting Socket Assembly, 1 11/16”	x		x	x	x	x	x	x	x
	100009586	Charge Clip Installation Tool	x	x	x	x	x	x	x	x	x
	100009585	Charge Clip Downloading Tool	x	x	x	x	x	x	x	x	x
	100014500	Pneumatic Pop-Rivet Gun Cherry Brand, Phased Guns	x	x		x	x	x	x	x	x
	100014483	Charge Mounting Bracket Installation Fixture, 2 1/8”		x		x	x	x	x	x	x
	100014485	Charge Mounting Bracket Installation Fixture, 1 11/16”	x			x	x	x	x	x	x
		Nozzle Cherry Pop-rivet Gun #4	x	x		x	x	x	x	x	x
		Nozzle Modification Drawing, for non-Cherry Models	x	x		x	x	x	x	x	x
		Arbor Press, Drago Model #AP-0	x	x		x	x	x	x	x	x
	100158429	O.D. Gauge for assembled gun 2 1/8”		x	x	x	x	x	x	x	x
	100158430	O.D. Gauge for assembled gun 1 11/16”	x		x	x	x	x	x	x	x
	100014482	Charge Tightening Wrench, Deep-Star™ 2 1/8”		x	x	x	x	x	x	x	x
	100014484	Charge Tightening Wrench, Deep-Star 1 11/16”	x		x	x	x	x	x	x	x
Other Tools											
		Sheet Metal Cutter, Wiss M3R									
		Thread Tap 5/8 x 24 UNF (for Carrier Strip)									
		Thread Tap 3/8” x 24 UNF (For Tandem Connection)									
		Allen Wrench,									
		Allen Wrench, 3/16”									
		Allen Wrench,									
		Wrench, 9/16” ring or socket									

Required Assembly Tools Parts List

Item	Description	Part Number
1	Blaster’s Digital Multimeter SD-109	100009455
2	1/16 in., 3/16 in., & 3/8 in. Allen wrench	N/A
3	7/16 in. & 9/16 in. Wrench	N/A
4	Cap crimper	100010566
5	Wire stripper	N/A
Detonator safety tube assembly		
6	Resistorized Detonators (up to 3.5” long)	100141901
	Detonators (up to 11.5” long)	100158423
	RED® High Pressure Capsule Detonator	100157521
8	Detonating Cord Cutters – for textile cord	100005417

Deep-Star™ Firing Heads

Item	Description	2 1/8 in.	1 11/16 in.
1	Firing Head Adapter, Plug-in (Button Contact), Double O-ring HTHP	100157532	100157532
2A	Firing Head Plug-in, Deep-Star™ System, Double o-ring	100157604	100157605
2B	Firing Head, Deep-Star GO®-style	100014452	100008043
3	Detonator Protector	100014455	100014455
4	Screw, Button Head .25”-20 D x 3/16” L	100014502	100014502
5	Detonator	See Detonator Section	
6	Bolt	100005517	100005517
7	Jam Nut	100005519	100005519
8	Detonating Spacer Bar, plug-in style	100014440	100014440
9	Detonating Spacer Bar 18” (requires tandem)	100005420	100005420
10	Screw, Socket Head #10-32 D x .25” L	100002087	100002087
11	Detonating Cord	See Appendix A	
12	Detonating Cord Retainer (tandem connection)	100157582	100157582
13	Detonating Cord Retainer (threaded charge hole)	100008038	100008038
14	Detonator Retainer Clamp - .61” OD	100157572	100157572
	Detonator Retainer Clamp - .50” OD	100005425	100005425
	Detonator Retainer Clamp - .375” OD	100157580	100157580
	Detonator Retainer Clamp - .325” OD	100157579	100157579
15	Boot Assembly, Teflon* HTHP	100014501	100014501

*Teflon is a trademark of E.I. Dupont De Nemours

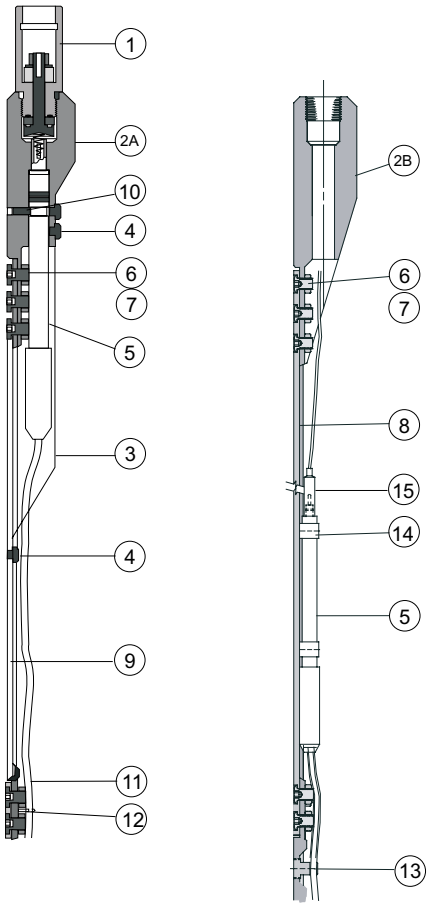

Deep-Star™ Firing Heads

1 $^{11}/_{16}$-in. and 2 $^{1}/_{8}$-in. 0° Phase Deep-Star™ Systems

Item	Description	1 11/16 in.	2 1/8 in.
1	Tandem, 2” long, 1 Shot	100005423	100005423
2	Rollover Sleeve, Deep-Star™	100008062	100005518
3	Detonating Cord	See Appendix A	
4	Detonating Cord Protector	100157592	100157593
5	Detonating Cord End Seal, Rubber	100000652	100000652
6	Bolt	100005517	100005517
7	Jam Nut	100005519	100005519
8	Carrier Strip - 12’, 4-spf - 143” long/47 shots	100008032	100008032
	Carrier Strip - 6’, 4-spf - 71” long/23 shots	100008031	100008031
	Carrier Strip - 12’, 6-spf - 143” long/70 shots	100008034	100008034
	Carrier Strip - 6’, 6-spf - 71” long/34 shots	100008033	100008033
	Carrier Strip - 12’, 8-spf - 143” long/93 shots	100014444	N/A
	Carrier Strip - 6’, 8-spf - 71” long/45 shots	100014443	N/A
9	Charge Clip, included w/charges	100157947	100157947
10	Charge - Deep-Star RDX DP, w/Clip	N/A	100014345
	Charge - Deep-Star HMX DP, w/Clip	N/A	100009448
	Charge - Deep-Star HMX ***Millennium***™, w/Clip	N/A	101210198
	Charge - Deep-Star HMX BH, w/Clip	N/A	101206239
	Charge - Deep-Star HNS DP, w/Clip	N/A	100157041
	Charge - Deep-Star HMX Max Force™	101521848	N/A
11	Seizing Cord, Nylon	100010982	100010982
	Seizing Cord, Kevlar	69159	69159
12	Bottom Guide, Low Profile	100005424	100005424

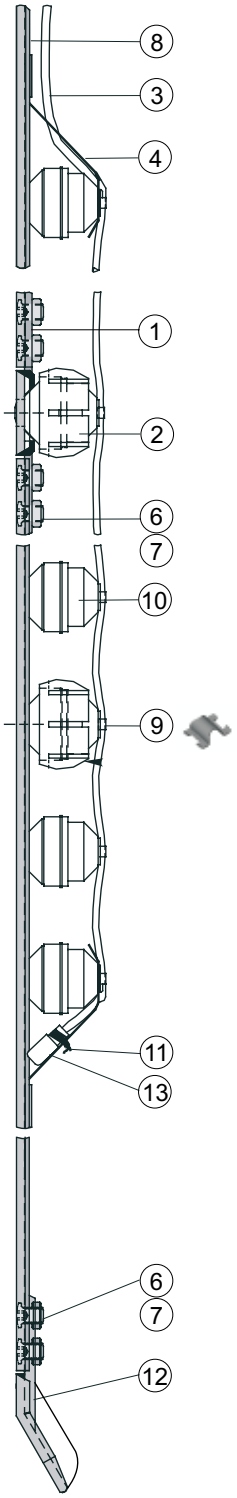

1 $^{11}/_{16}$-in. and 2 $^{1}/_{8}$-in.
0° Phase Deep-Star™ Systems

JRC

1 11/16-in. and 2 1/8-in. 90° Downside Phase Deep-Star™ Systems

Item	Description	1 11/16 in.	2 1/8 in.
1	Tandem, 2" long, 1 Shot	100005423	100005423
2	Rollover Sleeve, Deep-Star	100008062	100005518
3	Detonating Cord	See Appendix A	
4	Detonating Cord Protector	100157588	100157591
5	Detonating Cord End Seal, Rubber	100000652	100000652
6	Bolt	100005517	100005517
7	Jam Nut	100005519	100005519
8	Carrier Strip - 12', 4-spf - 144" long/46 shots	100008035	100008035
	Carrier Strip - 6', 4-spf - 69" long/22 shots	100014445	100014445
9	Charge Clip, included w/charges	100157947	100157947
10	Charge - Deep-Star HMX DP, w/Clip	100083049	100009448
	Charge - Deep-Star HMX ***Millennium***, w/Clip	N/A	101210198
	Charge - Deep-Star HMX BH, w/Clip	N/A	101206239
	Charge - Deep-Star HNS DP, w/Clip	N/A	100157041
11	Seizing Cord, Nylon	100010982	100010982
	Seizing Cord, Kevlar	69159	69159
12	Bottom Guide, Low Profile	100005424	100005424
**13	Charge Mounting Bracket	100008040	100008037
14	Pop-Rivet, Stainless Steel	100008061	100008061

** (2 1/8 in.) — 45°, 135°, 25°, 315°
(1 11/16 in.) — 45°, 57°

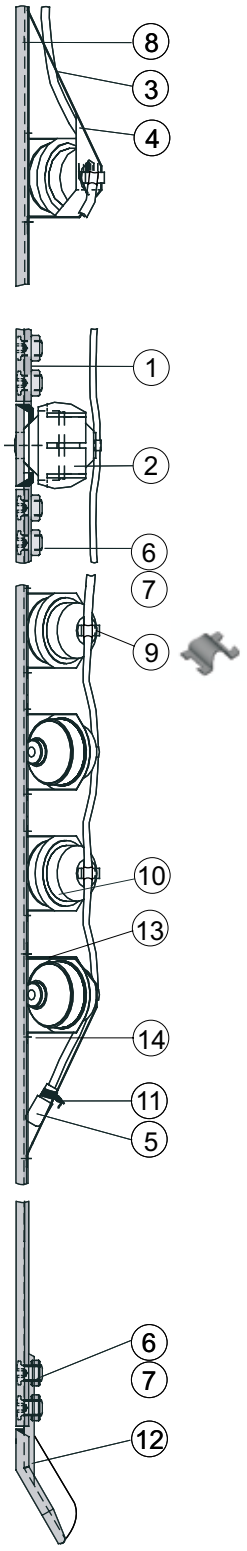

1 11/16-in. and 2 1/8-in. 90° Downside Phase Deep-Star™ Systems

2 1/8-in. 90° Spiral Phase Deep-Star™ Systems

Item	Description	2 1/8 in.
1	Tandem, 2” long, 1 Shot	100005423
2	Rollover Sleeve, Deep-Star	100005518
3	Detonating Cord	See Appendix A
4	Detonatinig Cord Protector	100157591
5	Detonating Cord End Seal, Rubber	100000652
6	Bolt	100005517
7	Jam Nut	100005519
8	Carrier Strip - 12’, 4-spf - 144” long/46 shots	100008035
	Carrier Strip - 6’, 4-spf - 69” long/22 shots	100014445
9	Charge Clip, included w/charges	100157947
10	Charge - Deep-Star HMX DP, w/Clip	100009448
	Charge - Deep-Star HMX ***Millennium***, w/Clip	101210198
	Charge - Deep-Star HMX BH, w/Clip	101206239
	Charge - Deep-Star HNS DP, w/Clip	100157041
11	Seizing Cord, Nylon	100010982
	Seizing Cord, Kevlar	69159
12	Bottom Guide, Low Profile	100005424
13	Charge Mounting Bracket - 45°, 135°, 225°, 315°	100008037
14	Pop-Rivet, Stainless Steel	100008061

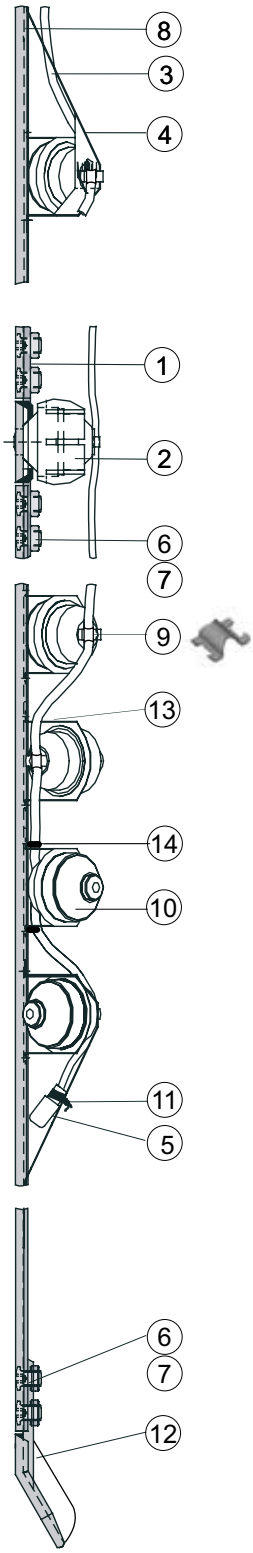

2 1/8-in. 90° Spiral Phase Deep-Star™ Systems

1 11/16-in. and 2 1/8-in. Triphase Deep-Star™ Systems

Item	Description	1 11/16 in.	2 1/8 in.
1	Tandem, 2” long, 1 Shot	100005423	100005423
2	Rollover Sleeve, Deep-Star	100008062	100005518
3	Detonating Cord	See Appendix A	
4	Detonating Cord Protector	100157592	100157593
5	Detonating Cord End Seal, Rubber	100000652	100000652
6	Bolt	100005517	100005517
7	Jam Nut	100005519	100005519
8	Carrier Strip - 12’, 6-spf - 141” long/69 shots	100008036	100008036
	Carrier Strip - 6’, 6-spf - 69” long/33 shots	100008257	100008257
	Carrier Strip - 12’, 6.6-spf - 143” long/77 shots	100080357	N/A
	Carrier Strip - 6’, 6.6-spf - 70” long/37 shots	100080358	N/A
9	Charge Clip, included w/charges	100157947	100157947
10	Charge - Deep-Star HMX DP, w/Clip	100083049	100009448
	Charge - Deep-Star HMX ***Millennium***, w/Clip	N/A	101210198
	Charge - Deep-Star HMX BH, w/Clip	N/A	101206239
	Charge - Deep-Star HNS DP, w/Clip	N/A	100157041
11	Seizing Cord, Nylon	100010982	100010982
	Seizing Cord, Kevlar	69159	69159
12	Bottom Guide, Low Profile	100005424	100005424
**13	Charge Mounting Bracket	100008040	100008037
14	Pop-Rivet, Stainless Steel	100008061	100008061

**(2 1/8 in.) — 45°, 135°, 25°, 315°
(1 11/16 in.) — 45°, 57°

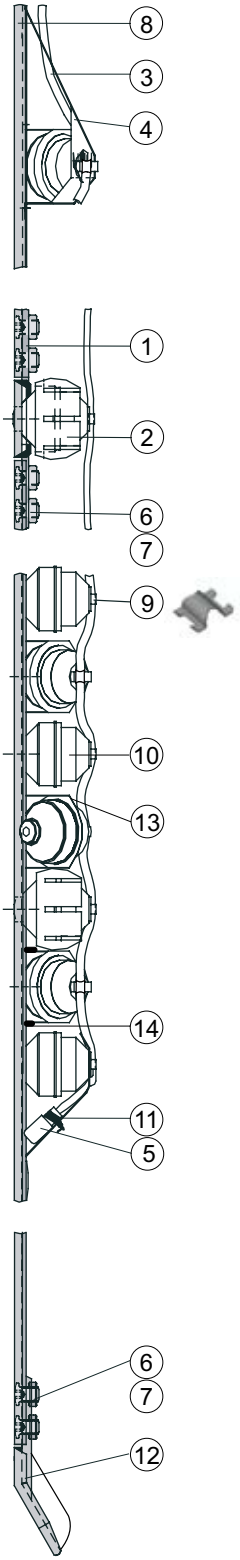

1 11/16-in. and 2 1/8-in. Triphase Deep-Star™ Systems

1 $^{11}/_{16}$-in. and 2 $^{1}/_{8}$-in. Pentaphase Deep-Star™ Systems

Item	Description	2 1/8 in.	1 11/16 in.
1	Tandem, 2” long, 1 Shot	100005423	100005423
2	Rollover Sleeve, Deep-Star	100005518	100008062
3	Detonating Cord	See Appendix A	
4	Detonating Cord Protector	100157591	100157588
5	Detonating Cord End Seal, Rubber	100000652	100000652
6	Bolt	100005517	100005517
7	Jam Nut	100005519	100005519
8	Carrier Strip - 12’, 5.8-spf - 141” long/65 shots	101207479	101207479
	Carrier Strip - 5’, 5.8-spf - 58” long/25 shots	101207478	101207478
9	Charge Clip, included w/charges	100157947	100157947
10	Charge - Deep-Star RDX DP, w/Clip	100014345	N/A
	Charge - Deep-Star HMX DP, w/Clip	100009448	100083049
	Charge - Deep-Star HMX ***Millennium***, w/Clip	101210198	N/A
	Charge - Deep-Star HMX BH, w/Clip	101206239	N/A
	Charge - Deep-Star HNS DP, w/Clip	100157041	N/A
11	Seizing Cord, Nylon	100010982	100010982
	Seizing Cord, Kevlar	69159	69159
12	Bottom Guide, Low Profile	100005424	100005424
**13	Charge Mounting Bracket	100008037	100008040
	Charge Mounting Bracket - 90°	101204940	101211642
14	Pop-Rivet, Stainless Steel	100008061	100008061

**(2 1/8 in.) — 45°, 135°, 25°, 315°
(1 11/16 in.) — 45°, 57°

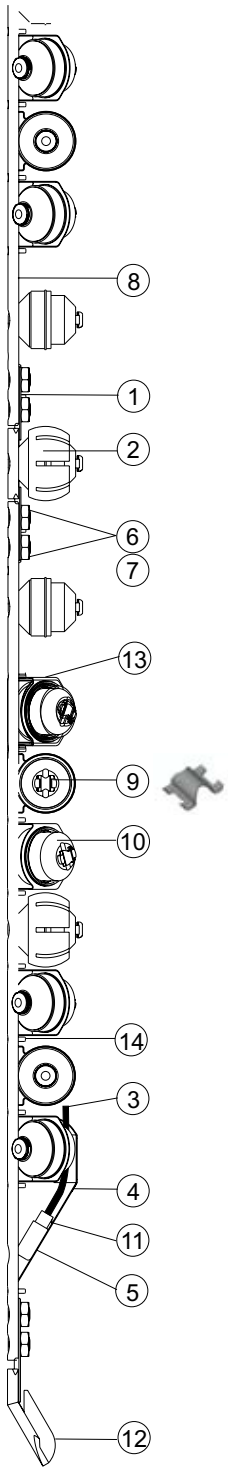

1 $^{11}/_{16}$-in. and 2 $^{1}/_{8}$-in. Pentaphase Deep-Star™ Systems

2 1/8-in. Heptaphase Deep-Star™ Systems

Item	Description	2 1/8 in.
1	Tandem, 2” long, 1 Shot	100005423
2	Rollover Sleeve, Deep-Star	100005518
3	Detonating Cord	See Appendix A
4	Detonatinig Cord Protector	100157591
5	Detonating Cord End Seal, Rubber	100000652
6	Bolt	100005517
7	Jam Nut	100005519
8	Carrier Strip - 11’, 5.8-spf - 132” long/61shots	101207481
	Carrier Strip - 5’, 5.8-spf - 58” long/225shots	101207480
9	Charge Clip, included w/charges	100157947
10	Charge - Deep-Star RDX DP, w/Clip	100014345
	Charge - Deep-Star HMX DP, w/Clip	100009448
	Charge - Deep-Star HMX ***Millennium***, w/Clip	101210198
	Charge - Deep-Star HMX BH, w/Clip	101206239
	Charge - Deep-Star HNS DP, w/Clip	100157041
11	Seizing Cord, Nylon	100010982
	Seizing Cord, Kevlar	69159
12	Bottom Guide, Low Profile	100005424
13	Charge Mounting Bracket - 45°, 135°, 225°, 315°	100008037
	Charge Mounting Bracket - 90°	101204940
14	Pop-Rivet, Stainless Steel	100008061

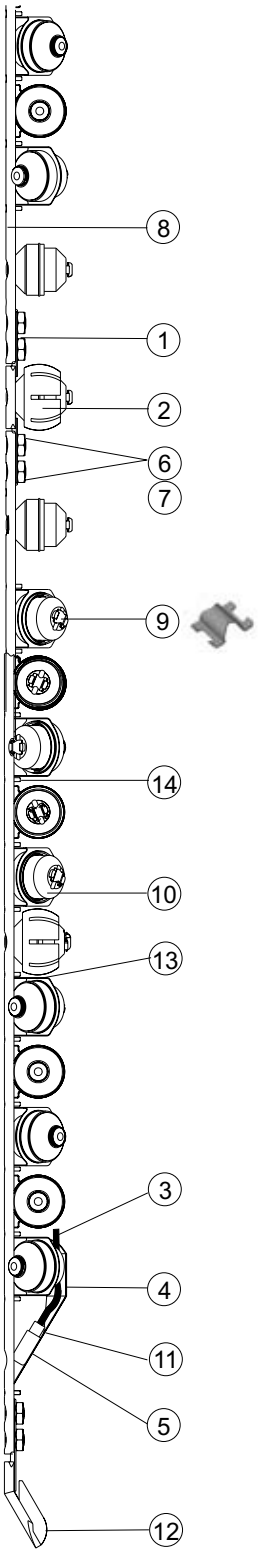

2 1/8-in. Heptaphase Deep-Star™ Systems

2 1/8-in. Octaphase Deep-Star™ Systems

Item	Description	2 1/8 in.
1	Tandem, 2” long, 1 Shot	100005423
2	Rollover Sleeve, Deep-Star	100005518
3	Detonating Cord	See Appendix A
4	Detonatinig Cord Protector	100157591
5	Detonating Cord End Seal, Rubber	100000652
6	Bolt	100005517
7	Jam Nut	100005519
8	Carrier Strip - 11’, 5.8-spf - 140” long/65 shots	101215826
	Carrier Strip - 6’, 5.8-spf - 74” long/33 shots	101215803
	Carrier Strip - 4’, 5.8-spf - 52” long/25 shots	101215779
9	Charge Clip, included w/charges	100157947
10	Charge - Deep-Star RDX DP, w/Clip	100014345
	Charge - Deep-Star HMX DP, w/Clip	100009448
	Charge - Deep-Star HMX ***Millennium***, w/Clip	101210198
	Charge - Deep-Star HMX BH, w/Clip	101206239
	Charge - Deep-Star HNS DP, w/Clip	100157041
10A	Charge - Deep-Star Domed 180° RDX DP w/Clip	101215439
	Charge - Deep-Star Domed 180° HMX SDP w/Clip	101216268
11	Seizing Cord, Nylon	100010982
	Seizing Cord, Kevlar	69159
12	Bottom Guide, Low Profile	100005424
13	Charge Mounting Bracket - 45°, 135°, 225°, 315°	100008037
	Charge Mounting Bracket - 90°	101204940
	Charge Mounting Bracket - 180°	101208664
14	Pop-Rivet, Stainless Steel	100008061

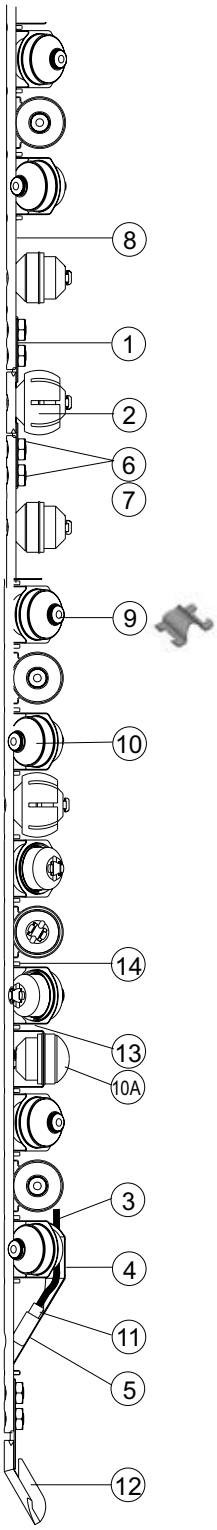

2 1/8-in.
Octaphase Deep-Star™ Systems

Jet Research Center's explosive components have been designed using sound engineering principles and test procedures and are manufactured or selected with strict attention to quality and safety. To enhance safety, all JRC detonators either contain safety resistors or comply with API RP 67. This section provides information concerning the following equipment:

- RED® Detonators
- Detonators
- Detonating Cords*
- TCP Explosive Transfer Components
- Sidewall Core Gun Loads Igniters

* Please see Appendix "A" for JRC's recommended detonating cord usage.

Capsule RED® Detonators (101272600)

The Capsule RED® detonator is an advanced electroexplosive device designed for use with capsule perforating guns and other explosive devices where a pressure-resistant detonator is required. The design features of the Capsule RED detonator provides significantly improved safety characteristics over conventional resistorized devices and allow wellsite activities to continue, uninterrupted while perforating.

Features

- Does not use primary explosives
- Redundant electrical components enhance safety.
- Ceramic firing capacitors assure reliability.
- Surface-mount circuit technology provides ruggedness.
- Metal housing provides enhanced radio frequency shielding.
- High-output explosive load and flyer plate assure reliable detonation transfer.
- Dual sealing methods at top of detonator
- Patented sealing for detonating cord interface

Specifications

- No-fire voltage level: 120 volts DC
- Firing voltage: 132 to 160 VDC (nominal 144 VDC)
- Recommended firing polarity: positive or negative DC
- Requirements for radio silence waivers:
  - Transmitters with power less than one watt = no exclusion area
  - Handheld RF devices (cell phones, walkie talkies) = 10-ft exclusion area
  - Other RF transmitters (fixed or mobile) = 50-ft exclusion area
  - Workboats with 1 Mhz, 1000 w transmitters = 165-ft exclusion area
- Bleed-off time with power removed: 5 sec.
- Semi-conductor bridge (SCB) resistance: 2 ohms
- No-fire DC power dissipation (standalone SCB, without circuit): 5 watts minimum
- Energetic materials:
  - Ignition pyrotechnic mix = 50 mg THKP
  - Transition column = 400 mg HMX
  - Output pellet = 500 mg HMX
- Environmental rating: 375 °F at 15,000 psi for one hour
- UN shipping classification: 1.4S

Capsule RED® Detonators (101272600)

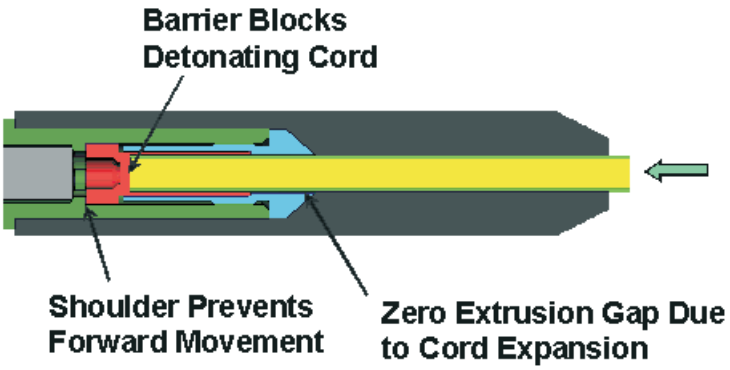

Capsule RED®

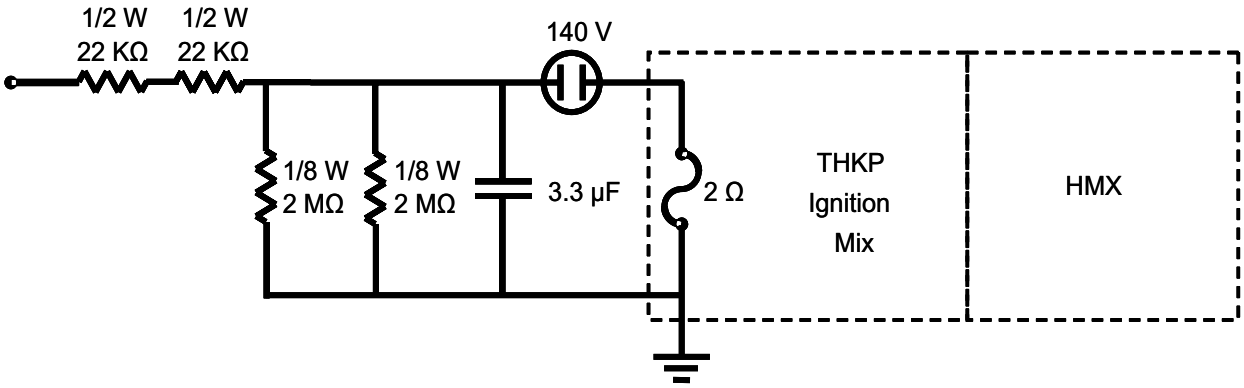

Electrical Explosive Schematic
Capsule RED® III Detonators
Sealing Method (US Patent 4,759,291)

Igniter RED® GO™-Style Detonators (101272602)

The RED®-III Igniter is an advanced electroexplosive device used to initiate gas-generating power charges inside oilfield setting tools. The design features of the RED-III Igniter provide significantly improved safety characteristics over conventional resistorized devices and allow many wellsite activities to continue uninterrupted while using power setting tools.

Features

- Mates with top subs and adapters for industry-standard setting tools
- Redundant electrical components for enhanced safety
- Multiple ceramic firing capacitors for reliability
- Surface-mount circuit technology for ruggedness
- Thermally conductive semi-conductor bridge for stray power dissipation
- Metal housing for radio frequency shielding
- Thin aluminum end-closure for low debris characteristics

Specifications

- No-fire voltage level: 120 volts DC
- Firing voltage: 130 to 160 VDC (nominal 144 VDC)
- Recommended firing polarity: positive or negative DC
- Requirements for radio silence waivers:
  - Transmitters with power less than one watt = no exclusion area
  - Handheld RF devices (cell phones, walkie talkies) = 10-ft exclusion area
  - Other RF transmitters (fixed or mobile) = 50-ft exclusion area
  - Workboats with 1 Mhz, 1000 w transmitters = 165-ft exclusion area
- Bleed-off time with power removed: 5 sec.
- SCB resistance: 2 ohms
- SCB no-fire power dissipation: 5 watts minimum
- Energetic materials:
  - Ignition pyrotechnic mix = 50 mg THKP
  - Main load = 1.5 g FFFG black powder
- Temperature rating: 375 °F for one hour
- UN shipping classification: 1.4G

Igniter RED® GO™-Style Detonators (101272602)

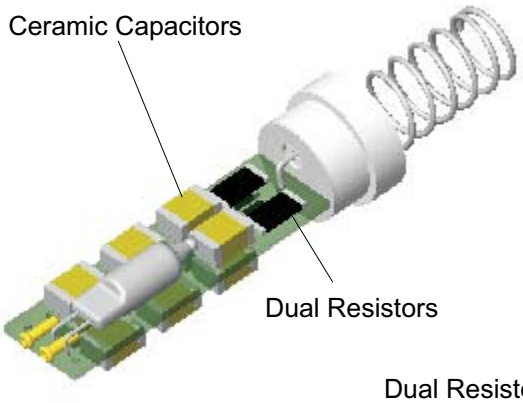

RED® III
Top Side

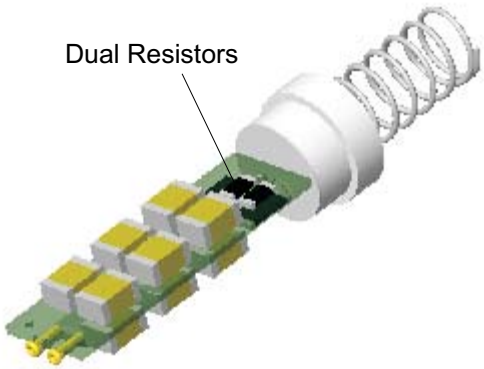

RED® III
Bottom Side

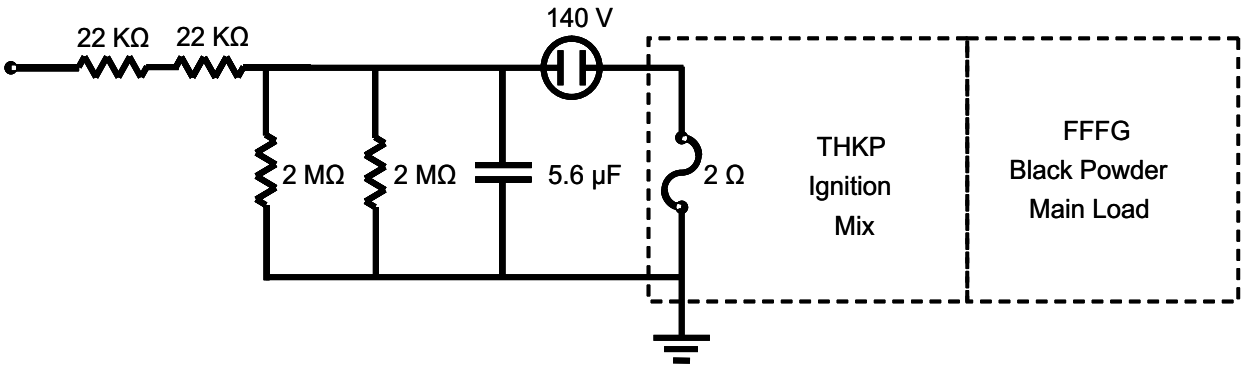

Firing and Safety Circuit
Igniter RED® III Detonators

Block RED® Detonators (101272580)

The Block RED® Detonator is an advanced electroexplosive device used to initiate perforating guns. The design features of the Block RED provide significantly improved safety characteristics over conventional resistorized devices and allow wellsite activities to continue uninterrupted while perforating.

Features

- Does not use primary explosives
- Redundant electrical components for enhanced safety
- Ceramic firing capacitors assure reliability.
- Surface-mount circuit technology for ruggedness
- Metal housing for radio frequency shielding
- High-output explosive load and flyer plate assure reliable detonation transfer.
- Fluid-disabled to prevent gun damage in the event of a seal failure

Specifications

- No-fire voltage level: 120 volts DC
- Firing voltage: 132 to 160 VDC (nominal 144 VDC)
- Recommended firing polarity: positive or negative DC
- Requirements for radio silence waivers:
  - Transmitters with power less than one watt = no exclusion area
  - Handheld RF devices (cell phones, walkie talkies) = 10-ft exclusion area
  - Other RF transmitters (fixed or mobile) = 50-ft exclusion area
  - Workboats with 1 Mhz, 1000 w transmitters = 165-ft exclusion area
- Bleed-off time with power removed: 5 sec.
- SCB resistance: 2 ohms
- SCB no-fire power dissipation: 5 watts minimum
- Energetic materials:
  - Ignition pyrotechnic mix = 50 mg THKP
  - Transition column = 400 mg HMX
  - Output pellet = 500 mg HMX
- Temperature rating: 375 °F for one hour
- UN shipping classification: 1.4S

Block RED® Detonators (101272580)

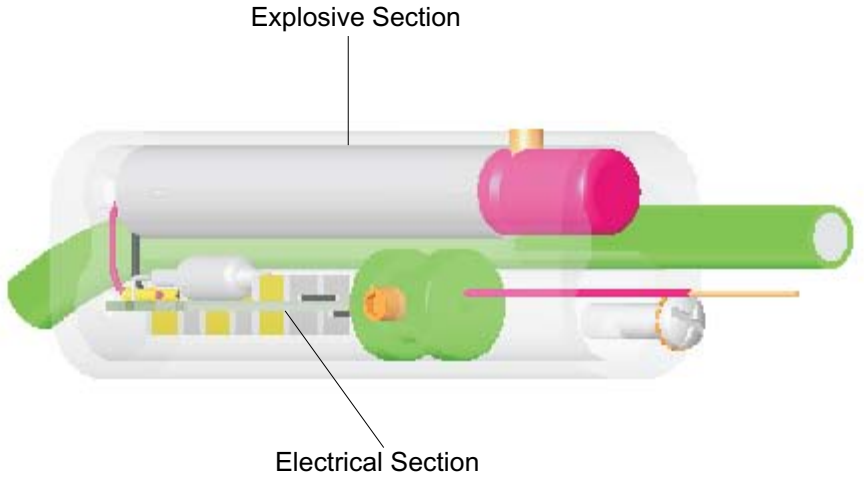

Inside View

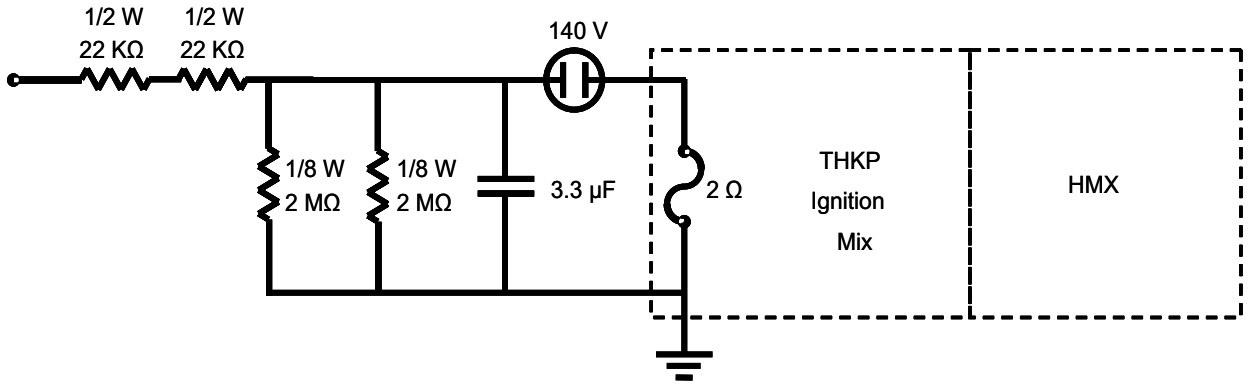

Electrical and Explosive Schematic
Block RED® III Detonators

Top Fire RED® Detonators (101272595)

The Top Fire RED® detonator is an advanced electroexplosive device used to initiate perforating guns, jet cutters, and severing tools. The design features of the Top Fire RED provide significantly improved safety characteristics over conventional resistorized devices and allow wellsite activities to continue uninterrupted while perforating.

Features

- Does not use primary explosives
- Redundant electrical components for enhanced safety
- Ceramic firing capacitors for reliability
- Surface-mount circuit technology for ruggedness
- Thermally conductive semi-conductor bridge for stray power dissipation
- Metal housing for radio frequency shielding
- High-output explosive load and flyer plate assure reliable detonation transfer.

Specifications

- No-fire voltage level: 120 volts DC
- Firing voltage: 132 to 160 VDC (nominal 144 VDC)
- Recommended firing polarity: positive or negative DC
- Requirements for radio silence waivers:

- Transmitters with power less than one watt = no exclusion area
- Handheld RF devices (cell phones, walkie talkies) = 10-ft exclusion area
- Other RF transmitters (fixed or mobile) = 50-ft exclusion area
- Workboats with 1 Mhz, 1000 w transmitters = 165-ft exclusion area

- Bleed-off time with power removed: 5 sec.
- SCB resistance: 2 ohms
- SCB no-fire power dissipation: 5 watts minimum
- Energetic materials:
  - Ignition pyrotechnic mix = 50 mg THKP
  - Transition column = 400 mg HMX
  - Output pellet = 500 mg HMX
- Temperature rating: 375 °F for one hour
- UN shipping classification: 1.4S

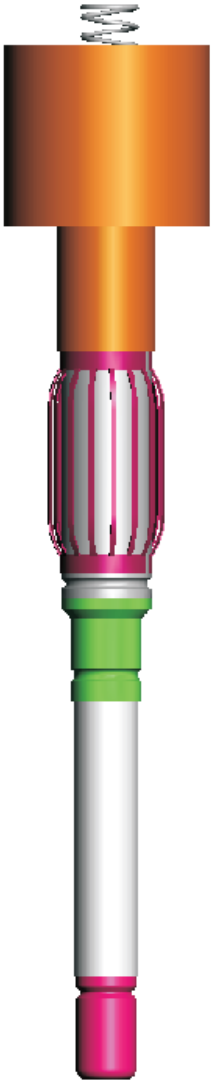

Top Fire RED® Detonators (101272595)

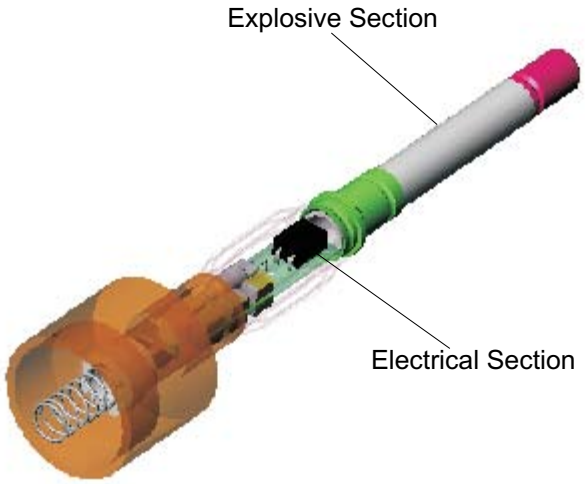

Inside View

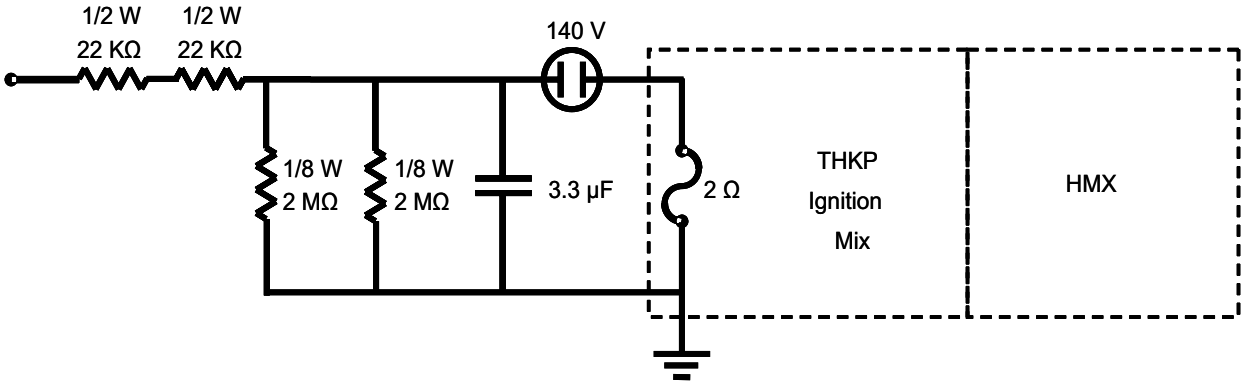

Electrical and Explosive Schematic
Top Fire RED® III Detonator

1 9/16-in. Top Fire RED® Systems Slip-On

Item No.	Description	Part No.
1	Shunt Plug	100142242
2	Firing Adapter Assy	100157532
3	Top Fire **RED**® III Detonator	101272595
4	Firing Adapter	101211259
5	Arming Safety Plug	101283823
6	Miniature PAI Insert	100157855
7	Bi-Directional Booster	See Appendix A
8	Miniature PAI Insert	100005277
9	Crossover, Sub	100158100

Contact JRC for High Temperature applications.

1 9/16-in. Top Fire RED® Systems Threaded

Item No.	Description	Part No.
1	Shunt Plug	100142242
2	Firing Adapter Assy	100157532
3	Top Fire **RED**® III Detonator	101272595
4	Firing Adapter	101211259
5	Arming Safety Plug	101283823
6	Miniature PAI Insert	100157855
7	Bi-Directional Booster	See Appendix A
8	Miniature PAI Insert	100005277
9	Tandem, Grooved Vann	101204473

Contact JRC for High Temperature applications.

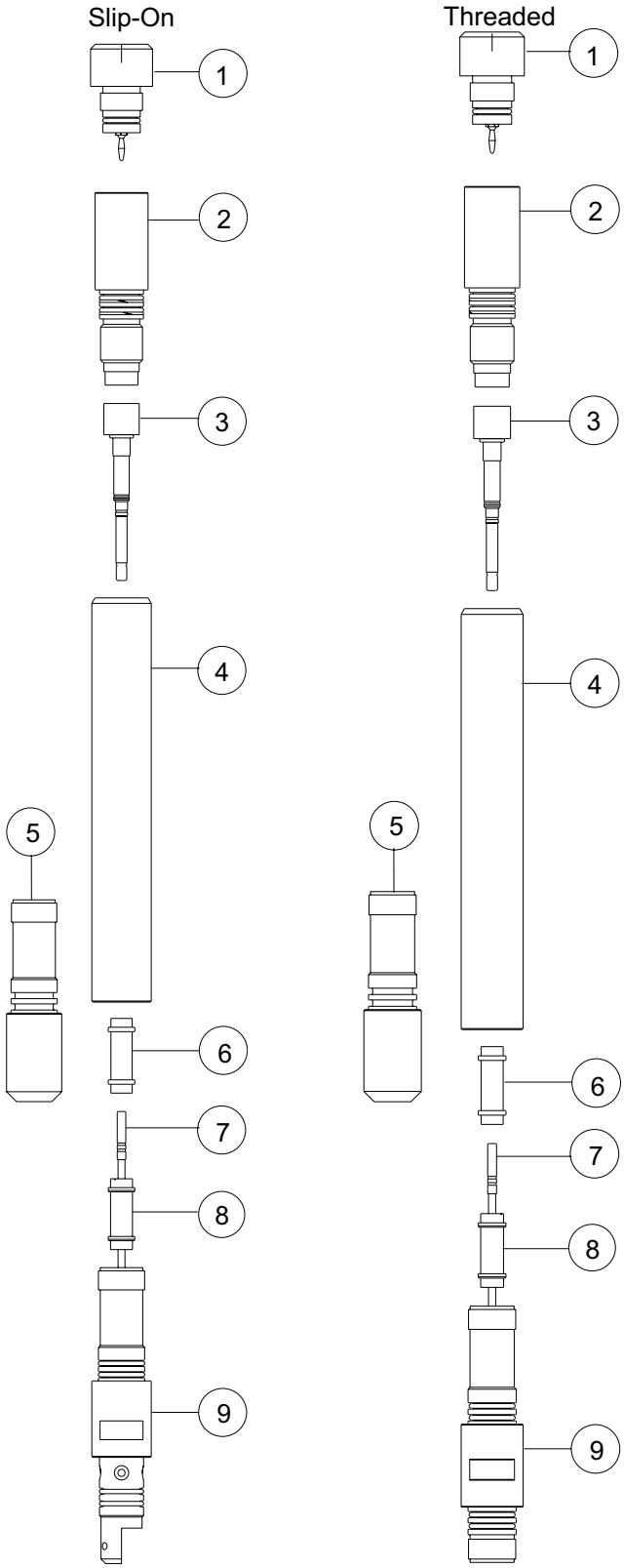

1 9/16-in. Top Fire RED® Systems

2-in. JRC Top Fire RED® Systems Slip-On

Item No.	Description	Part No.
1	Shunt Plug	100142242
2	Firing Adapter Assy	100157532
3	Top Fire RED® III Detonator	101272595
4	Firing Adapter	101211257
5	Arming Safety Plug	100008011
6	Miniature PAI Insert	100157855
7	Bi-Directional Booster	See Appendix A
8	Miniature PAI Insert	100005277
9	Crossover, Sub	100158107

Contact JRC for High Temperature applications.

2-in. JRC Top Fire RED® Systems Threaded

Item No.	Description	Part No.
1	Shunt Plug	100142242
2	Firing Adapter Assy	100157532
3	Top Fire RED® III Detonator	101272595
4	Firing Adapter	101211257
5	Arming Safety Plug	100008011
6	Miniature PAI Insert	100157855
7	Bi-Directional Booster	See Appendix A
8	Miniature PAI Insert	100005277
9	Tandem, Grooved Vann	101204729

Contact JRC for High Temperature applications.

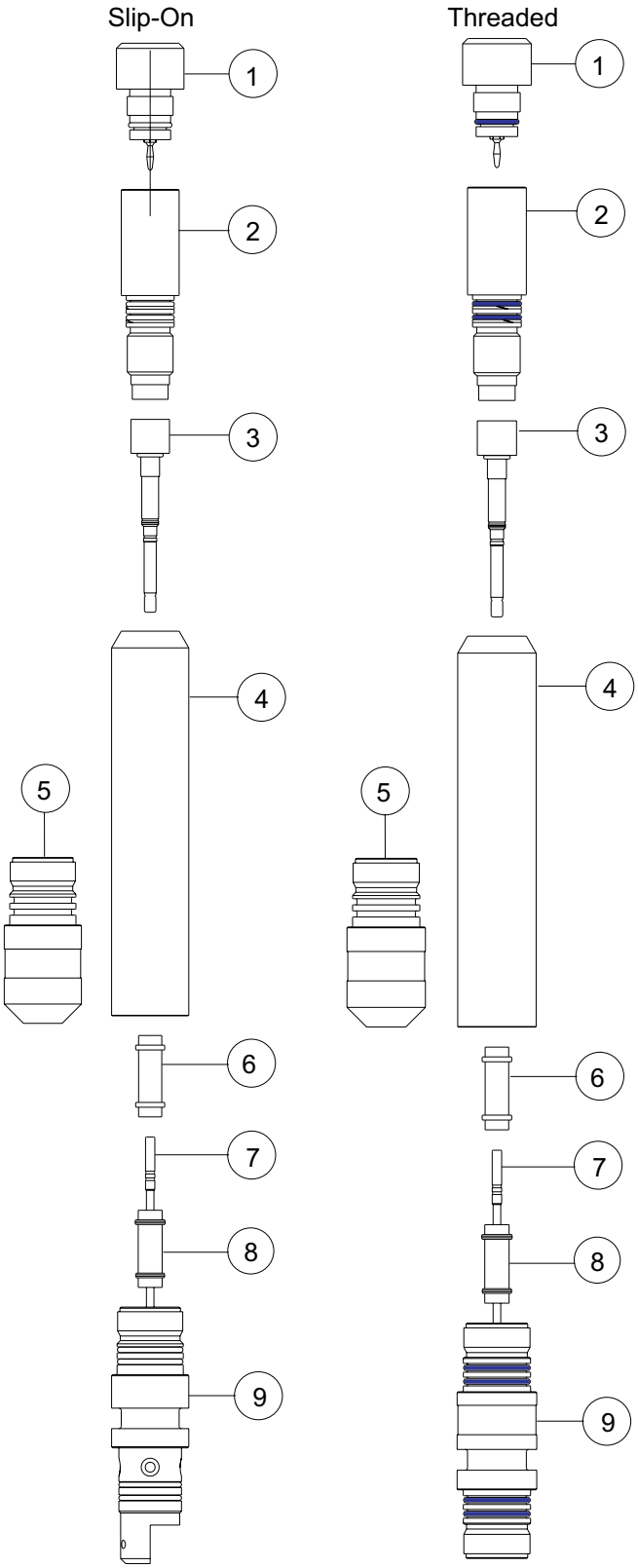

2-in. Top Fire RED® System

2 1/2-in. JRC Top Fire RED® Systems Slip-On

Item No.	Description	Part No.
1	Shunt Plug	100142242
2	Firing Adapter Assy	100157532
3	Top Fire **RED**® III Detonator	101272595
4	Firing Adapter	101211257
5	Arming Safety Plug	100008011
6	Miniature PAI Insert	100157855
7	Bi-Directional Booster	See Appendix A
8	Miniature PAI Insert	100005277
9	Crossover, Sub	101283127

Contact JRC for High Temperature applications.

2 1/2-in. JRC Top Fire RED® Systems Threaded

Item No.	Description	Part No.
1	Shunt Plug	100142242
2	Firing Adapter Assy	100157532
3	Top Fire **RED**® III Detonator	101272595
4	Firing Adapter	101211257
5	Arming Safety Plug	100008011
6	Miniature PAI Insert	100157855
7	Bi-Directional Booster	See Appendix A
8	Miniature PAI Insert	100005277
9	Tandem, Grooved Vann	101211269

Contact JRC for High Temperature applications.

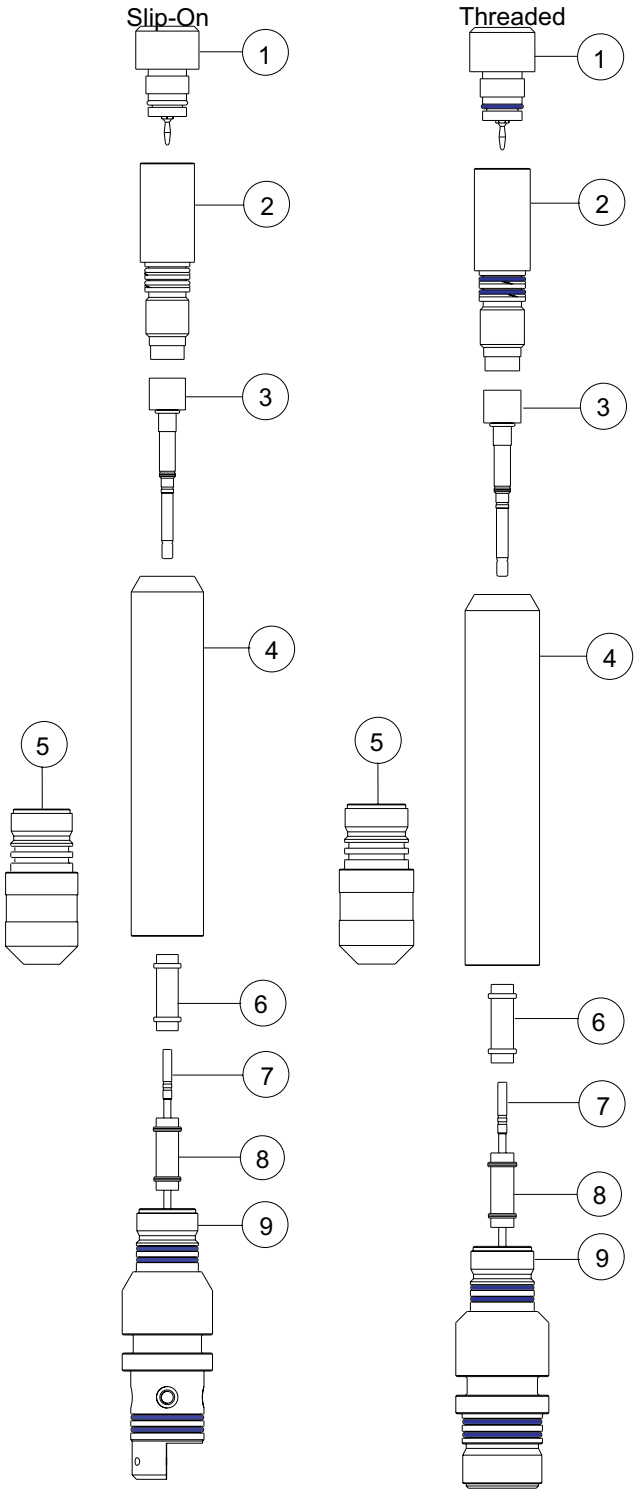

2 1/2-in. Top Fire RED® System

2 3/4-in. JRC Top Fire RED® System Threaded

Item No.	Description	Part No.
1	Shunt Plug	100142242
2	Collar	100157585
3	Arming Safety Plug	100005267
4	Firing Head Body	100157602
5	Top Fire RED® III Detonator	101272595
6	Sub Firing Head Body	100157595
7	Miniature PAI Insert	100157855
8	Bi-Directional Booster	See Appendix A
9	PAI Insert	100005255
10	Tandem, Grooved	100005261

Contact JRC for High Temperature applications.

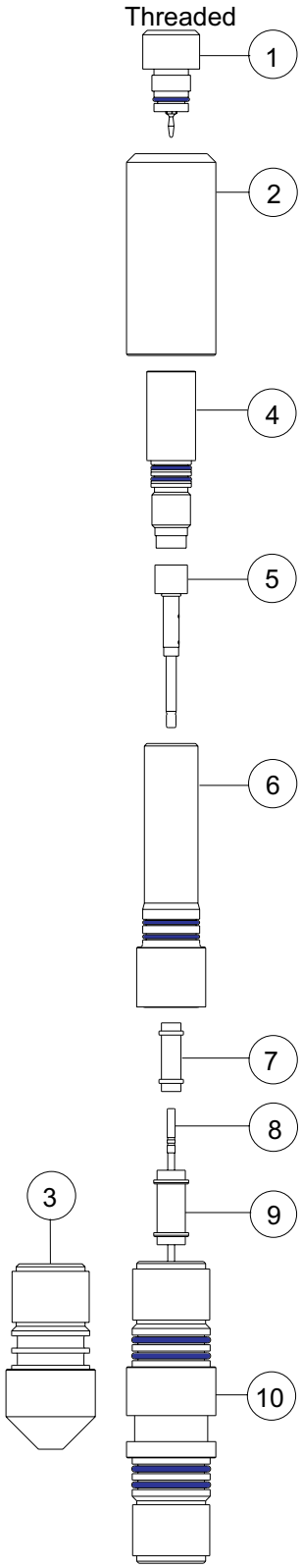

2 3/4-in. Top Fire RED® System

2 7/8-in. JRC Top Fire RED® System Threaded

Item No.	Description	Part No.
1	Shunt Plug	100142242
2	Collar	100157585
3	Arming Safety Plug	100005267
4	Firing Adapter Assy	100157532
5	Top Fire **RED**® III Detonator	101272595
6	Sub Firing Head Body	100157595
7	Miniature PAI Insert	100157855
8	Bi-Directional Booster	See Appendix A
9	PAI Insert	100005255
10	Tandem, Grooved	101245523

Contact JRC for High Temperature applications.

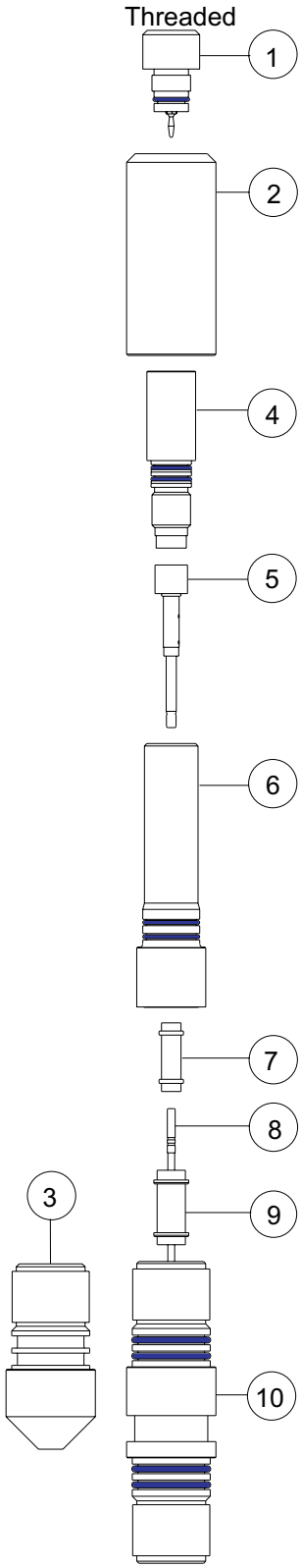

2 7/8-in. Top Fire RED® System

3 3/8-in. GO™-Thread System

Item No.	Description	Part No.
1	Thread Protector	N/A
2	Quick Change Sleeve (GO™ Thread)	101241941
3	Contact Sub Body	100142016
4	Top Fire **RED**® III Detonator	101272595
5	Block	101245352
6	PAI Insert	100157855
7	Bi-Directional Booster	See Appendix A
8	PAI Insert	100005255
9	Tandem, Grooved	101298160
10	Arming Safety Plug	101298197

Contact JRC for High Temperature applications.

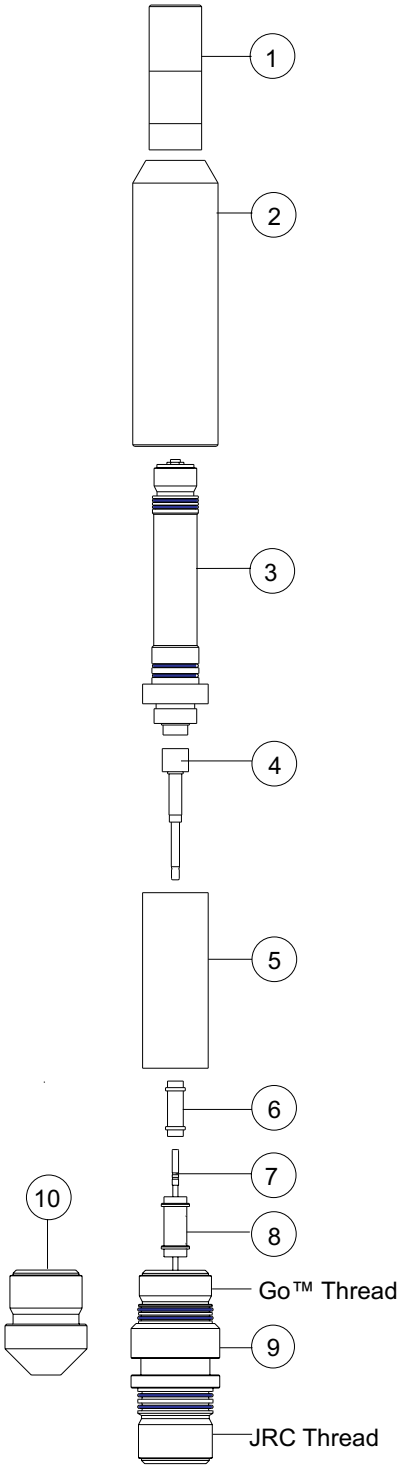

3 3/8-in.GO™-Thread System

4-in. Top Fire RED® GO™-Thread System

Item No.	Description	Part No.
1	Thread Protector	100144609
2	Quick Change Sleeve (GO Thread)	101241941
3	Contact Sub Body	100142016
4	Top Fire **RED**® III Detonator	101272595
5	Block	101245352
6	PAI Insert	100157855
7	Bi-Directional Booster	See Appendix A
8	PAI Insert	100005255
9	Crossover, Grooved (GO Thread)	101298685
10	Arming Safety Plug	102198197

Contact JRC for High Temperature applications.

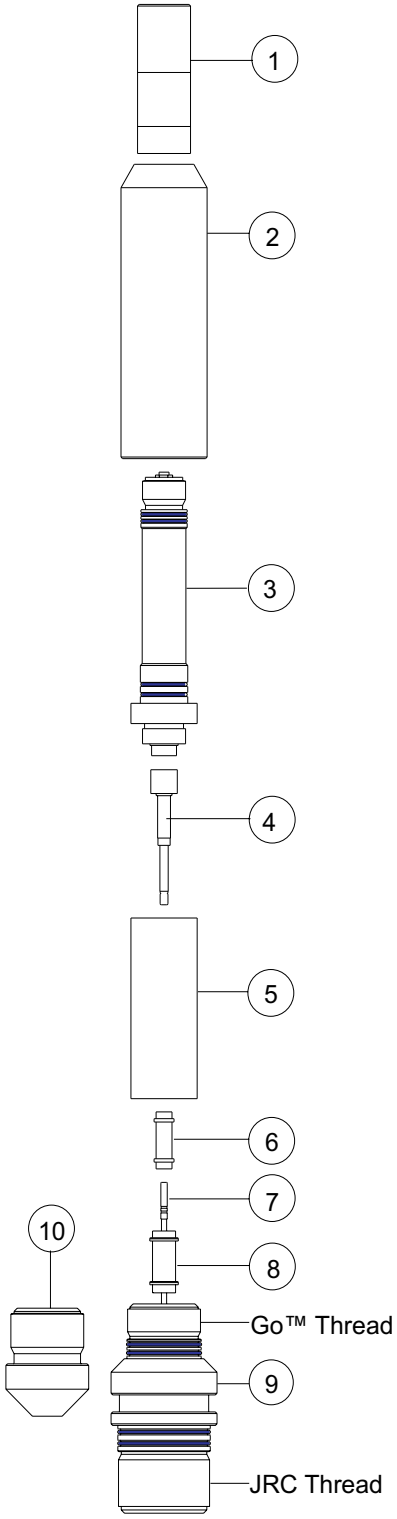

4 in. GO™-Thread System

4 1/2-in. Top Fire RED® GO™-Thread System

Item No.	Description	Part No.
1	Thread Protector	100144609
2	Quick Change Sleeve (GO Thread)	101241941
3	Contact Sub Body	100142016
4	Top Fire **RED**® III Detonator	101272595
5	Block	101245352
6	PAI Insert	100157855
7	Bi-Directional Booster	See Appendix A
8	PAI Insert	100005255
9	Crossover, Grooved (GO Thread)	101298764
10	Arming Safety Plug	101298197

Contact JRC for High Temperature applications.

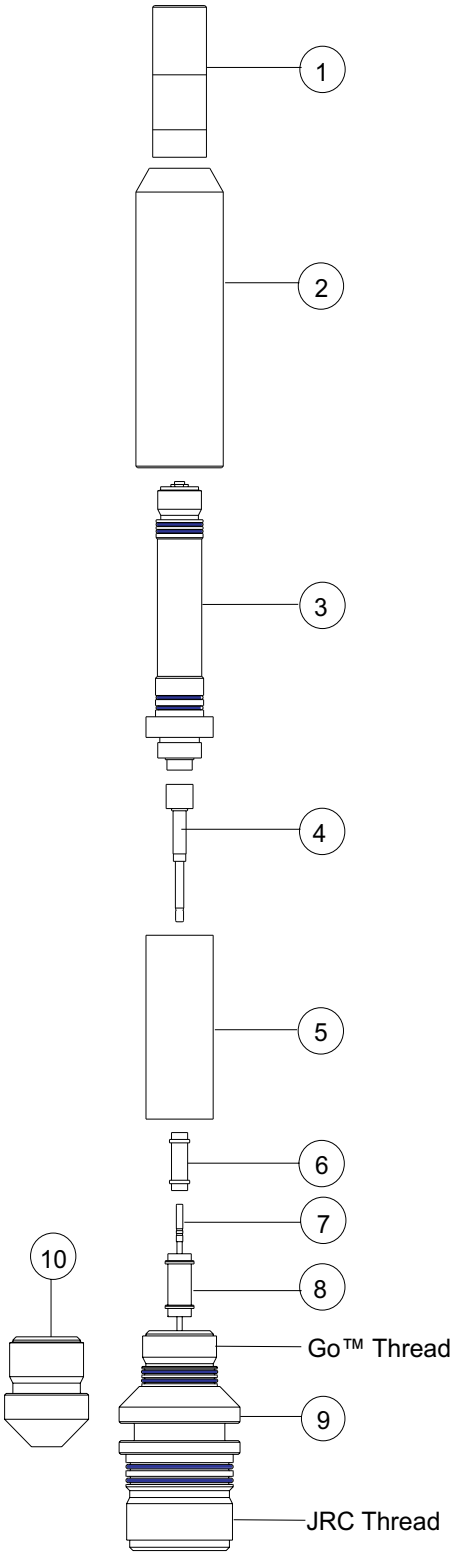

4 1/2-in. GO™-Thread System

5 1/8-in. Top Fire RED® GO™-Thread System

Item No.	Description	Part No.
1	Thread Protector	100144609
2	Quick Change Sleeve (GO Thread)	101241941
3	Contact Sub Body	100142016
4	Top Fire **RED**® III Detonator	101272595
5	Block	101245352
6	PAI Insert	100157855
7	Bi-Directional Booster	See Appendix A
8	PAI Insert	100005255
9	Crossover, Grooved (GO Thread)	101298789
10	Arming Safety Plug	101298197

Contact JRC for High Temperature applications.

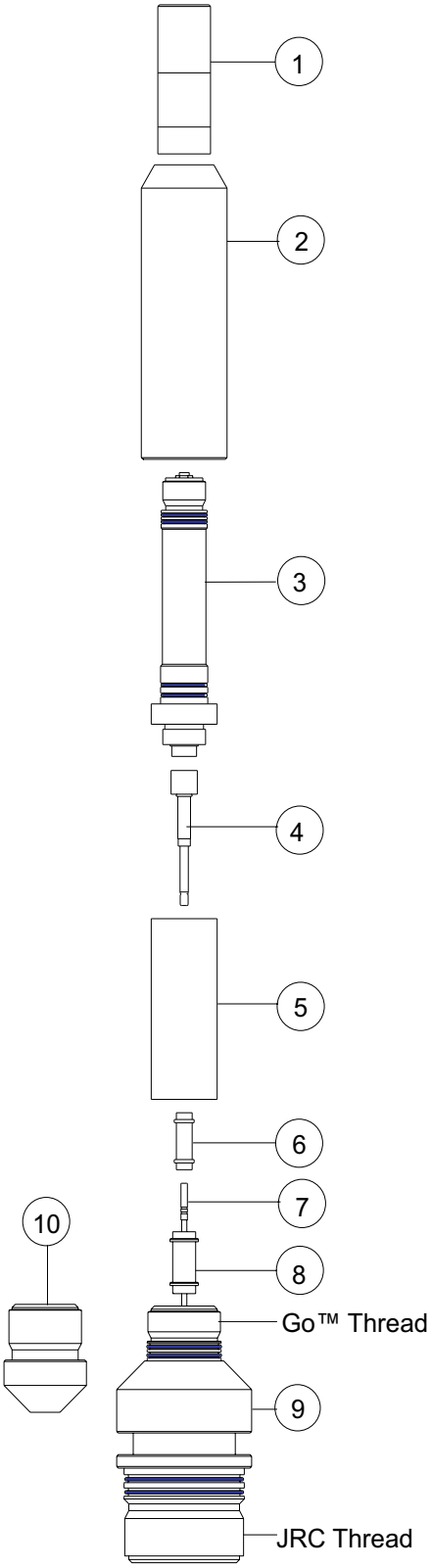

5 1/8-in. GO™-Thread System

7-in. Top Fire RED® GO™-Thread System

Item No.	Description	Part No.
1	Thread Protector	100144609
2	Quick Change Sleeve (GO Thread)	101241941
3	Contact Sub Body	100142016
4	Top Fire RED® III Detonator	101272595
5	Block	101245352
6	PAI Insert	100157855
7	Bi-Directional Booster	See Appendix A
8	PAI Insert	100005255
9	Crossover, Grooved (GO Thread)	101298805
10	Arming Safety Plug	101298197

Contact JRC for High Temperature applications.

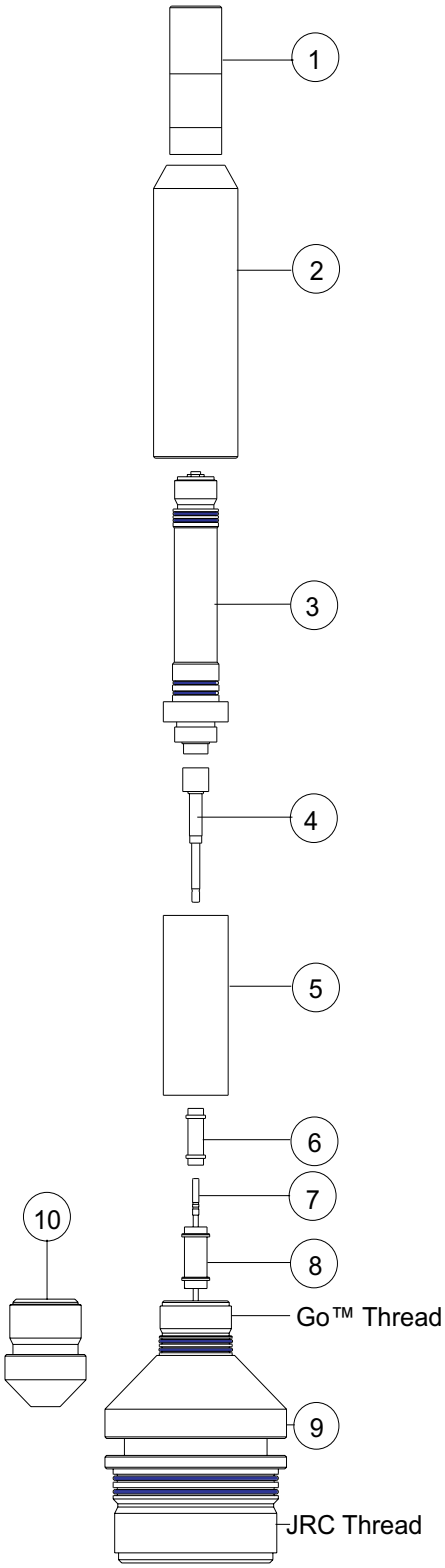

7-in. GO™-Thread System

3 3/8- in. Top Fire RED® Vann™-Thread System

Item No.	Description	Part No.
1	Thread Protector	100144609
2	Quick Change Sleeve (Vann™ Thread)	101245351
3	Contact Sub Body (Welex™ CCL)	100144607
4	Top Fire **RED**® III Detonator	101272595
5	Block	101245352
6	PAI Insert	100157855
7	Bi-Directional Booster	See Appendix A
8	PAI Insert	100005255
9	Tandem, Grooved	101245924
10	Arming Safety Plug	100005258

Contact JRC for High Temperature applications.

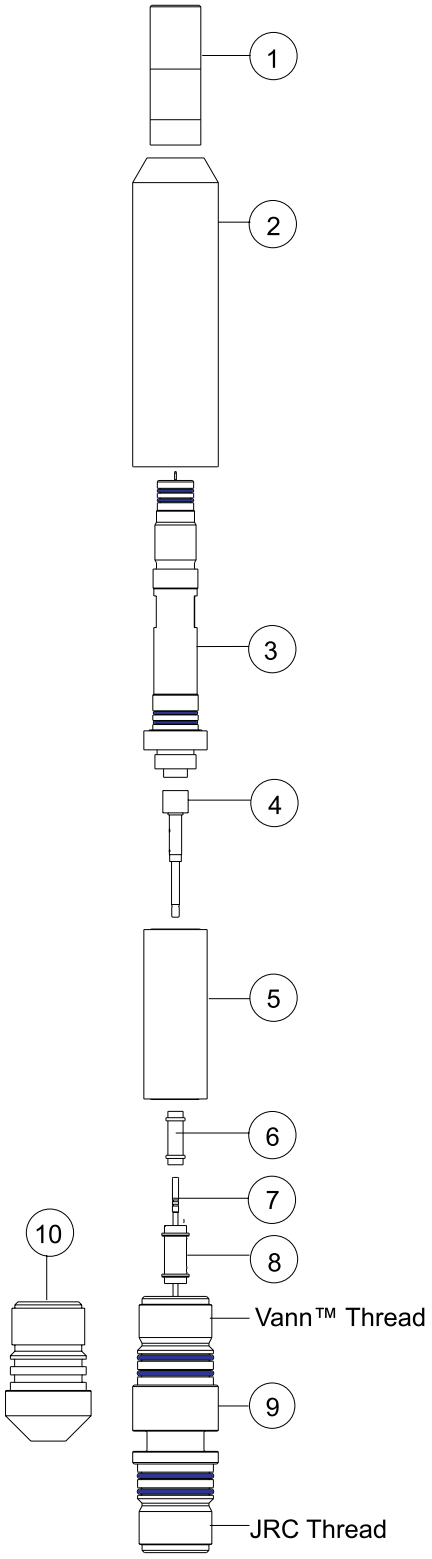

3 3/8-in. Vann™-Thread System

4-in. Top Fire RED® Vann™-Thread System

Item No.	Description	Part No.
1	Thread Protector	100144609
2	Quick Change Sleeve (Vann Thread)	101245351
3	Contact Sub Body (Welex CCL)	100144607
4	Top Fire **RED**® III Detonator	101272595
5	Block	101245352
6	PAI Insert	100157855
7	Bi-Directional Booster	See Appendix A
8	PAI Insert	100005255
9	Crossover, Grooved (Vann Thread)	101232004
10	Arming Safety Plug	100005258

Contact JRC for High Temperature applications.

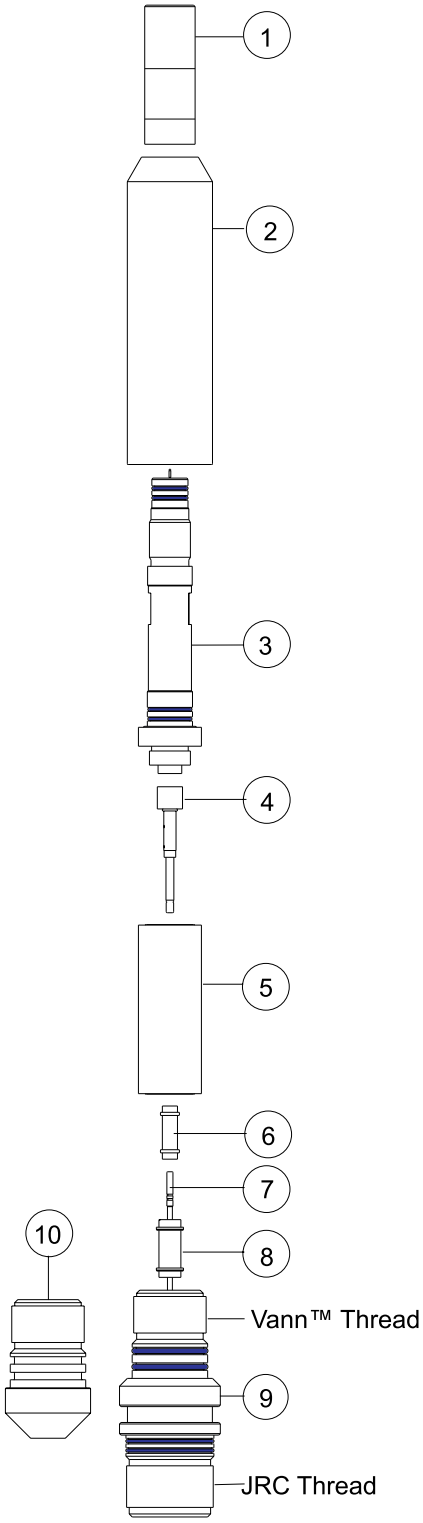

4-in. Vann™-Thread System

4 1/2-in. Top Fire RED® Vann™-Thread System

Item No.	Description	Part No.
1	Thread Protector	100144609
2	Quick Change Sleeve (Vann Thread)	101245351
3	Contact Sub Body (Welex CCL)	100144607
4	Top Fire RED® III Detonator	101272595
5	Block	101245352
6	PAI Insert	100157855
7	Bi-Directional Booster	See Appendix A
8	PAI Insert	100005255
9	Crossover, Grooved (Vann Thread)	101232026
10	Arming Safety Plug	100005258

Contact JRC for High Temperature applications.

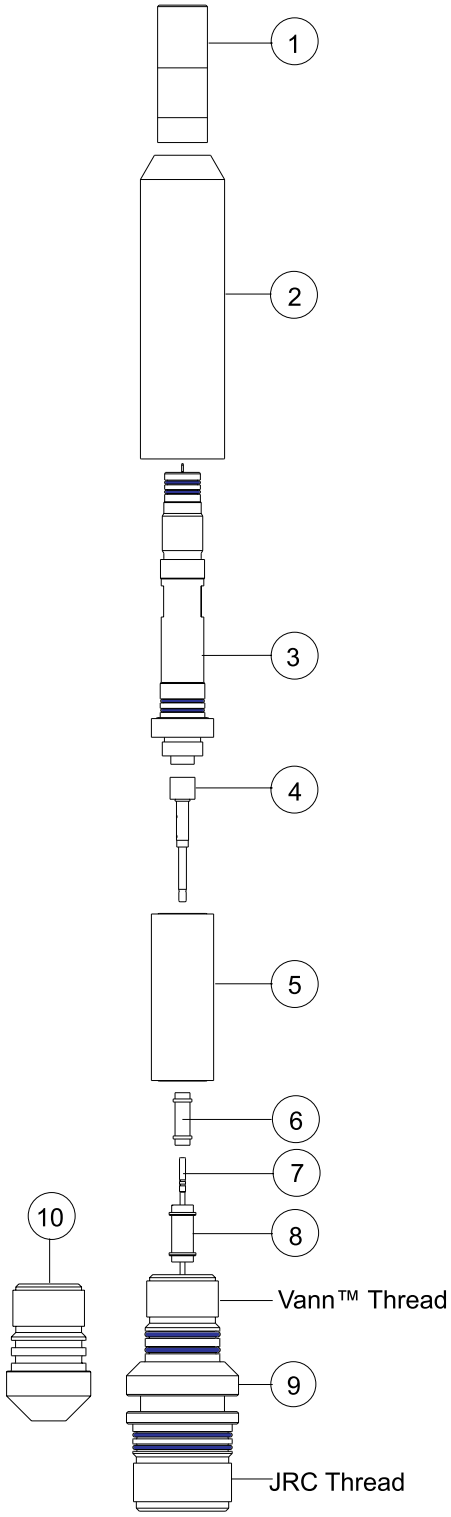

4 1/2-in. Vann™-Thread System

5 1/8-in. Top Fire RED® Vann™-Thread System

Item No.	Description	Part No.
1	Thread Protector	100144609
2	Quick Change Sleeve (Vann Thread)	10124351
3	Contact Sub Body (Welex CCL)	100144607
4	Top Fire **RED**® III Detonator	101272595
5	Block	101245352
6	PAI Insert	100157855
7	Bi-Directional Booster	See Appendix A
8	PAI Insert	100005255
9	Crossover, Grooved (Vann Thread)	101268070
10	Arming Safety Plug	100005258

Contact JRC for High Temperature applications.

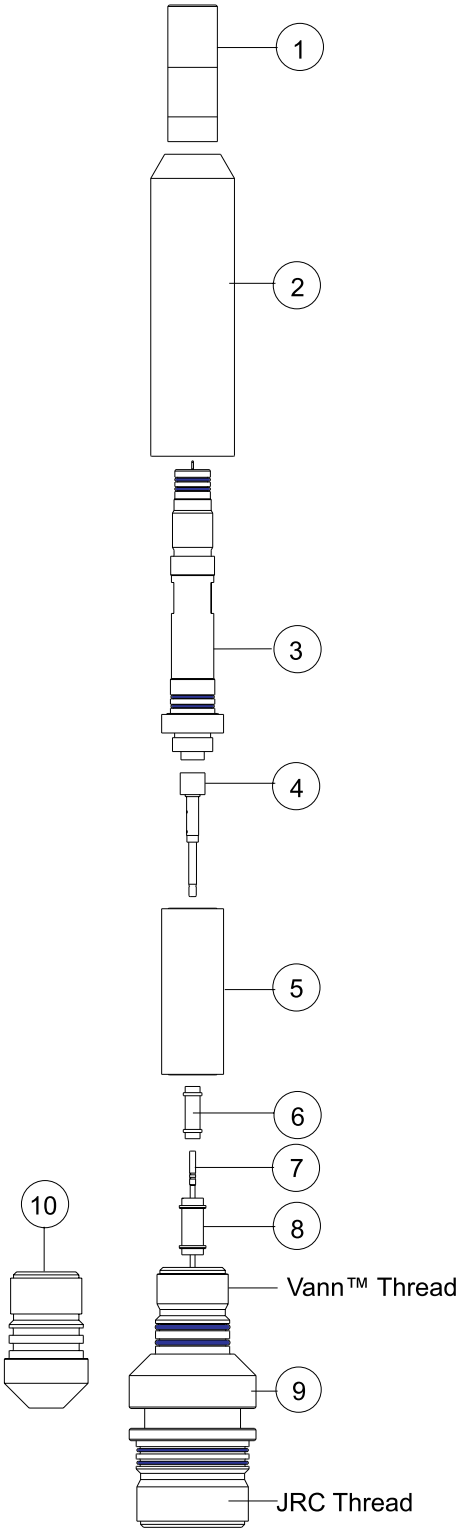

5 1/8- in. Vann™-Thread System

7-in. Top Fire RED® Vann™-Thread System

Item No.	Description	Part No.
1	Thread Protector	100144609
2	Quick Change Sleeve (Vann Thread)	101245351
3	Contact Sub Body (Welex CCL)	100144607
4	Top Fire RED® III Detonator	101272595
5	Block	101245352
6	PAI Insert	100157855
7	Bi-Directional Booster	See Appendix A
8	PAI Insert	100005255
9	Crossover, Grooved (Vann Thread)	101282825
10	Arming Safety Plug	100005258

Contact JRC for High Temperature applications.

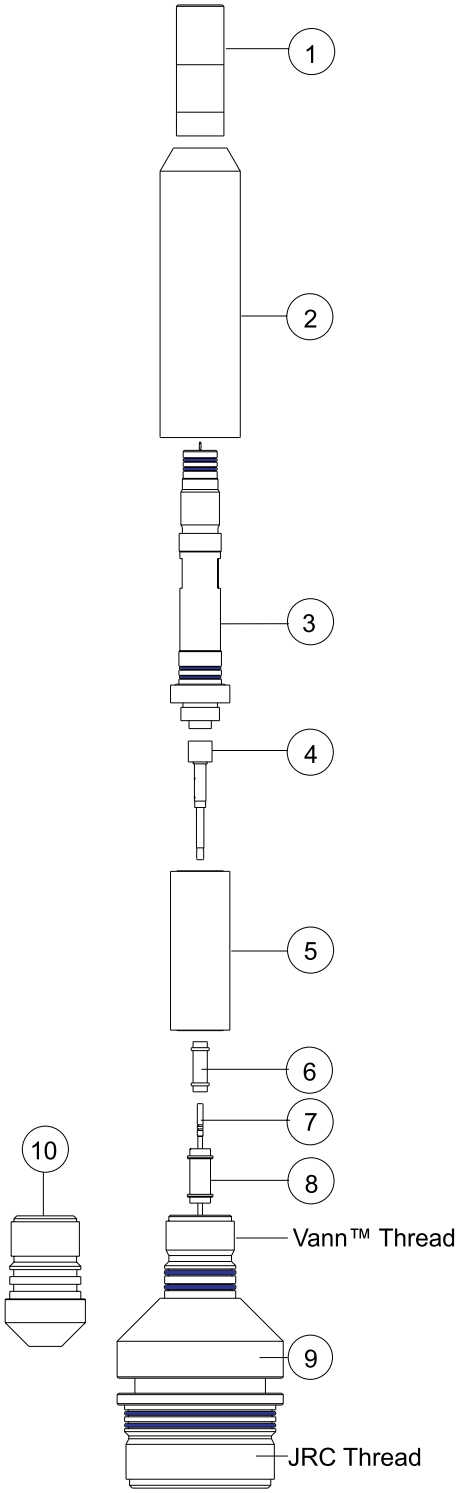

7-in. Vann™-Thread System

3 3/8-in. Top Fire RED® Welex™-Style System

Item No.	Description	Part No.
1	Block Assembly	100005432
2	Top Fire **RED**® III Detonator	101272595
3	Top Fire Sub	101302090
4	PAI Insert	100005431
5	Bi-Directional Booster	See Appendix A
6	PAI Insert	100005255
7	Tandem, Grooved	101245924
8	Arming Safety Plug	100005258

Contact JRC for high temperature applications.

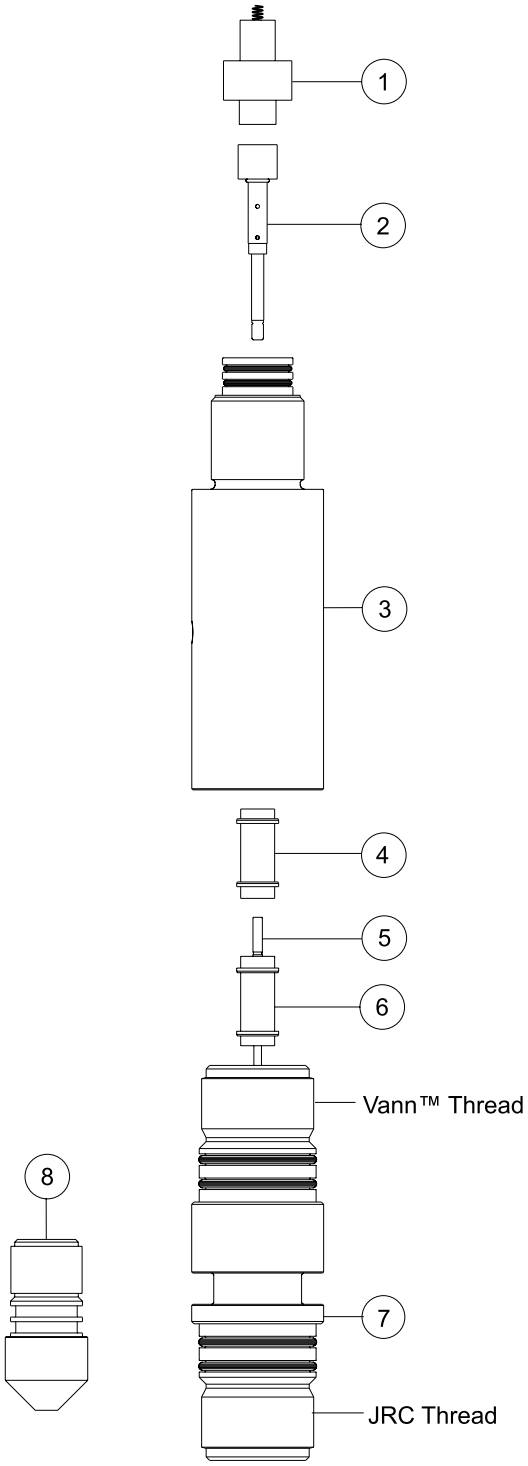

3 3/8-in.Welex™-Style System

4-in. Top Fire RED® Welex™-Style System

Item No.	Description	Part No.
1	Block Assembly	100005432
2	Top Fire **RED**® III Detonator	101272595
3	Top Fire Sub	120042538
4	Seal Pin	100005520
5	Safety Blocking Pin	100005521
6	PAI Insert	100005431
7	Bi-Directional Booster	See Appendix A
8	PAI Insert	100005255
9	Crossover, Grooved (Vann Thread)	101232004

Contact JRC for high temperature applications.

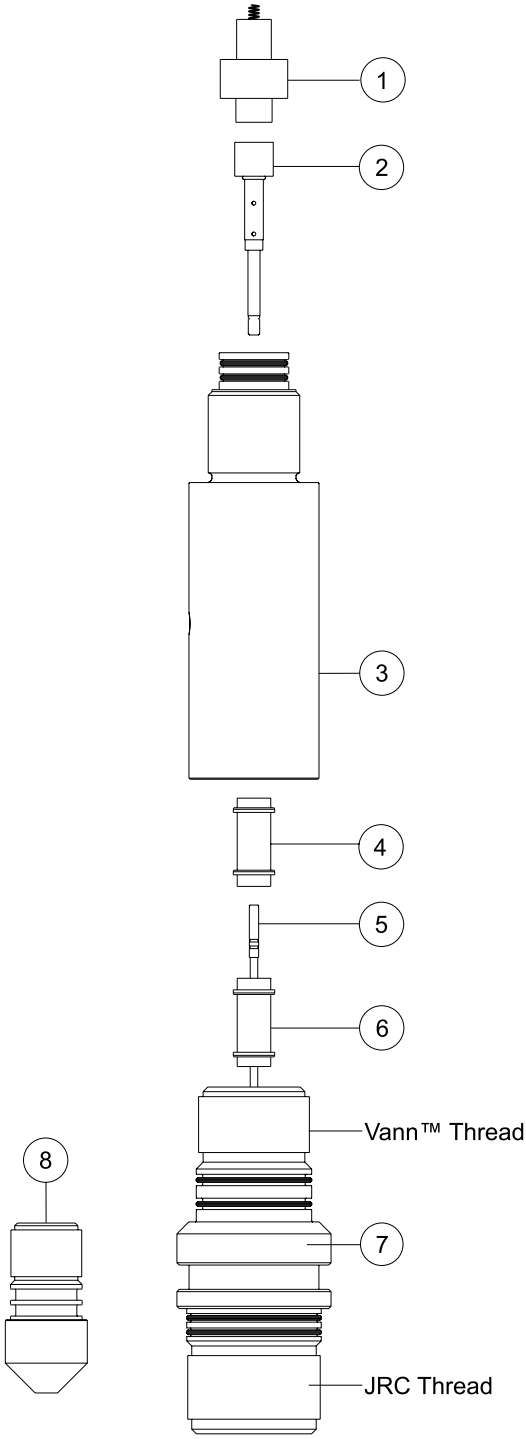

4-in. Welex™-Style System

4 1/2-in. Top Fire RED® Welex™-Style System

Item No.	Description	Part No.
1	Block Assembly	100005432
2	Top Fire **RED**® III Detonator	101272595
3	Top Fire Sub	120042538
4	Seal Pin	100005520
5	Safety Blocking Pin	100005521
6	PAI Insert	100005431
7	Bi-Directional Booster	See Appendix A
8	PAI Insert	100005255
9	Crossover, Grooved (Vann Thread)	101232026

Contact JRC for high temperature applications.

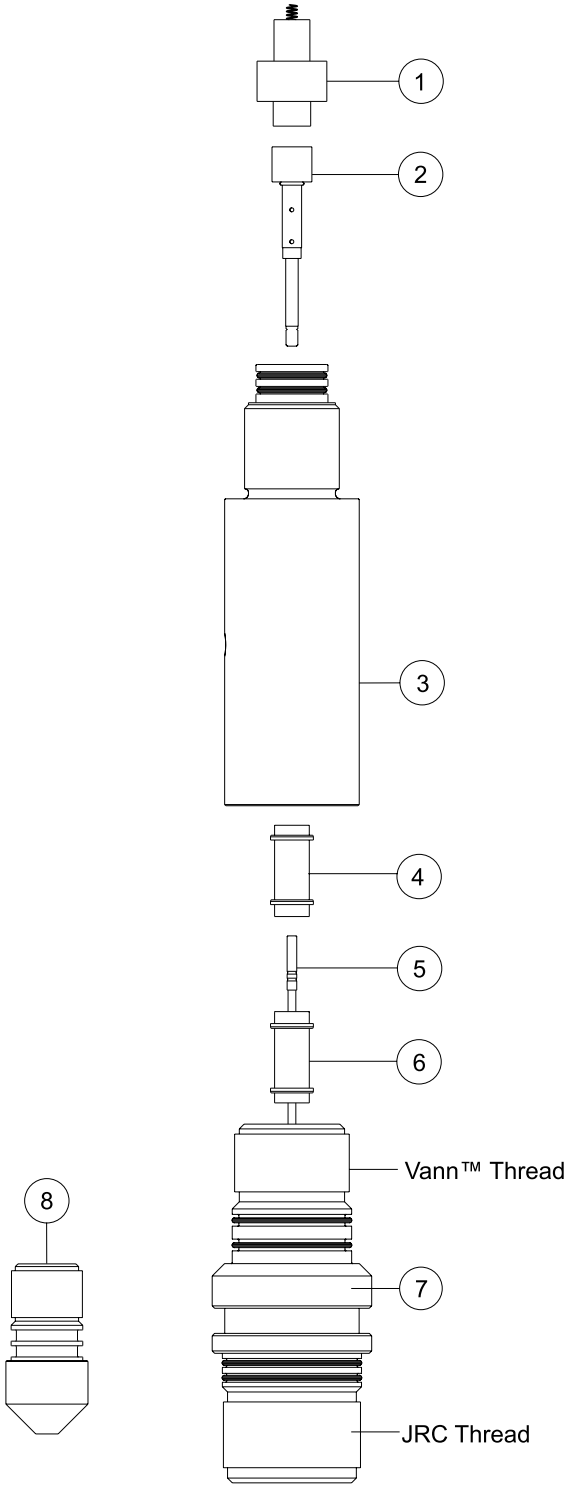

4 1/2 -in. Welex™-Style System

5 1/8-in. Top Fire RED® Welex™-Style System

Item No.	Description	Part No.
1	Block Assembly	100005432
2	Top Fire **RED**® III Detonator	101272595
3	Top Fire Sub	120042538
4	Seal Pin	100005520
5	Safety Blocking Pin	100005521
6	PAI Insert	100005431
7	Bi-Directional Booster	See Appendix A
8	PAI Insert	100005255
9	Crossover, Grooved (Vann Thread)	101268070

Contact JRC for high temperature applications.

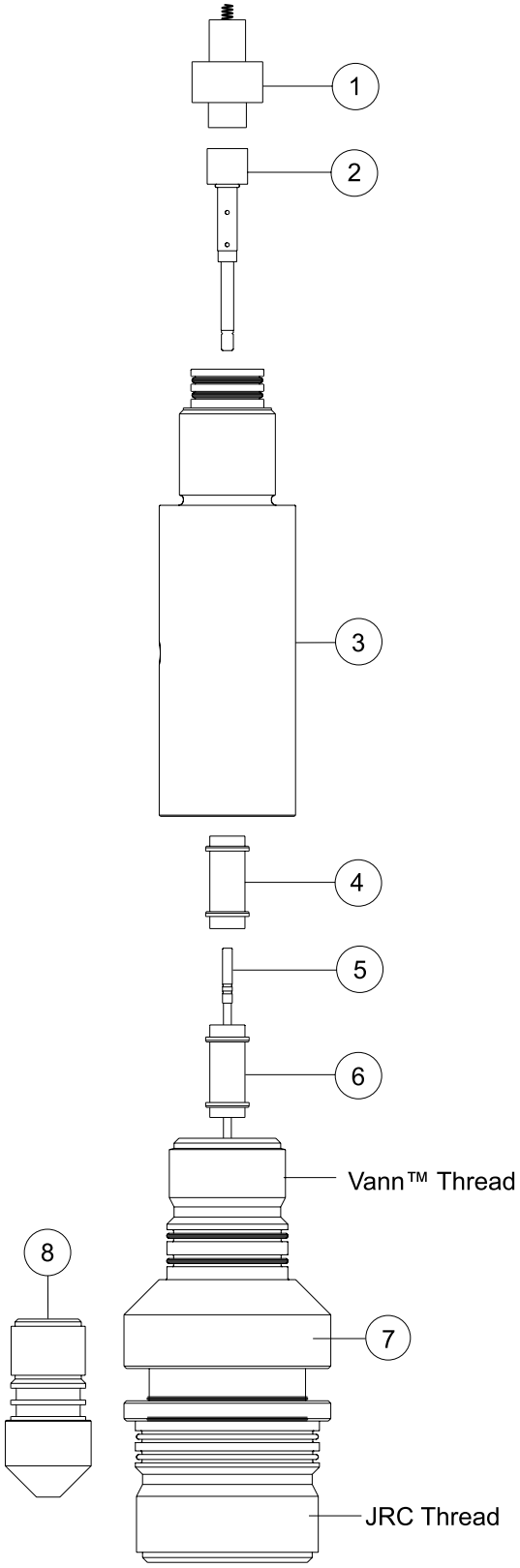

5 1/8-in.Welex™-Style System

7-in. Top Fire RED® Welex™-Style System

Item No.	Description	Part No.
1	Block Assembly	100005432
2	Top Fire **RED**® III Detonator	101272595
3	Top Fire Sub	120042538
4	Seal Pin	100005520
5	Safety Blocking Pin	100005521
6	PAI Insert	100005431
7	Bi-Directional Booster	See Appendix A
8	PAI Insert	100005255
9	Crossover, Grooved (Vann Thread)	101282825

Contact JRC for high temperature applications.

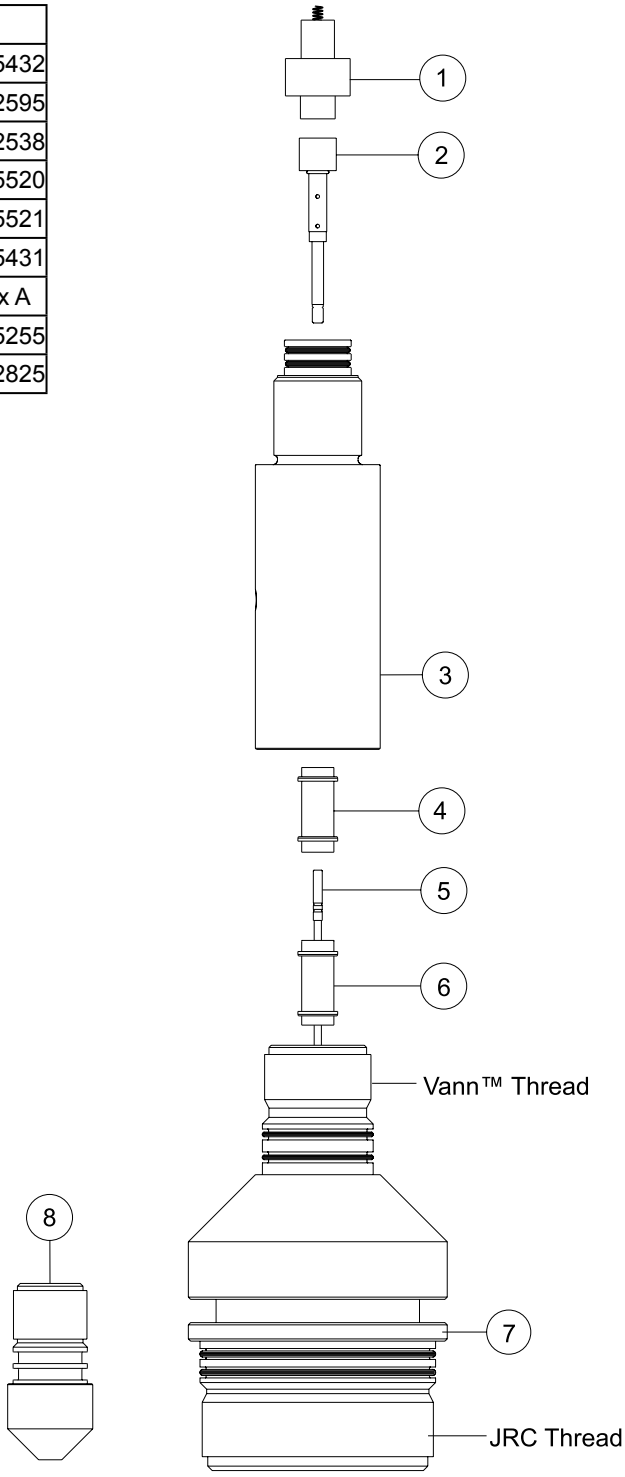

7 -in. Welex™-Style System

Detonators

Part No.	Description	Class	Fluid Disabled	Pressure/Temp for 1 hour. Rating f/1 Hr	Explosive Type Powder	Crimp On On	Approx all fire All Fire (amps)	Approx no fire No Fire (amps)	Ohms	Recommended Applications
101272595	**RED® III** Top Fire	1.4S	Yes	375 °F	HMX	No	160 Volts DC	120 Volts DC	1 Meg	**SAFE** Top Fire for HSC
101272580	**RED® III** Block	1.4S	Yes	375 °F	HMX	No	160 Volts DC	120 Volts DC	1 Meg	**SAFE** Bottom Fire HSC
101007855	JRC Extended D1208 w/ A-161	1.4S	Yes	460 °F	HNS	No	0.8 amps	0.2 amps	50-55	Top Fire for HSC
100008089	JRC Block , w/ E-140	1.4S	Yes	350 °F	RDX	No	0.8 amps	0.2 amps	50-55	Bottom Fire HSC
153993	DW 0015FD Dynamit Nobel	1.4B	Yes	302 °F	RDX	Yes	0.8 amps	0.2 amps	48-52	Hollow Steel Carriers
129417	DW 0015FD Dynamit Nobel	1.4S	Yes	302 °F	RDX	Yes	0.8 amps	0.2 amps	48-52	Hollow Steel Carriers
141442	A-161 Austin	1.4B	Yes	460 °F	HNS	No	0.8 amps	0.2 amps	50-55	Hollow Steel Carriers
154004	DW 0026FD Dynamit Nobel	1.4B	Yes	500 °F	HNS	Yes	0.8 amps	0.2 amps	48-52	Hollow Steel Carriers
129418	DW 0026FD Dynamit Nobel	1.4S	Yes	500 °F	HNS	Yes	0.8 amps	0.2 amps	48-52	Hollow Steel Carriers
100004157	G-21	1.4S	Yes	475 °F	HNS	Side	0.8 amps	0.2 amps	120	Select Fire, HSC
100000087	G-21 W/ 18 " Lead Wires	1.4S	Yes	475 °F	HNS	Side	0.8 amps	0.2 amps	120	Select Fire, HSC
100014490	A-85 Austin	1.4B	Yes	350 °F	RDX	No	0.8 amps	0.2 amps	50-55	HSC , Select Fire
101272600	**RED® III** Plug In Capsule	1.4S	No	375 °F/15,000	HMX	Yes	160 Volts DC	120 Volts DC	1 Meg	**SAFE** Exposed Systems
100005452	JRC HP/HT Capsule w/ A-161	1.4S	No	375 °F	HMX/HNS	Yes	0.8 amps	0.2 amps	50-55	Exposed Systems
100158206	A-105 Austin	1.4B	No	325 °F/15,000	RDX	Yes	0.8 amps	0.2 amps	50-55	Exposed Systems
187174	A-105/100 Austin	1.4B	No	325 °F/15,000	RDX	Yes	0.8 amps	0.2 amps	50-55	100 g Cord/ Backoff
153991	DW Z-480 Dynamit Nobel	1.4B	No	302 °F/14,400	RDX	Yes	0.8 amps	0.2 amps	48-52	Exposed Systems
129415	DW Z-480 Dynamit Nobel	1.4S	No	302 °F/14,400	RDX	Yes	0.8 amps	0.2 amps	48-52	Exposed Systems
153990	DW 1019S Dynamit Nobel	1.4B	No	374 °F/14,400	HNS	No	0.8 amps	0.2 amps	48-52	Exposed Systems
129414	DW 1019S Dynamit Nobel	1.4S	No	374 °F/14,400	HNS	No	0.8 amps	0.2 amps	48-52	Exposed Systems
153992	DW 1018 Dynamit Nobel	1.4B	No	374 °F /15,800	HNS	Yes	0.8 amps	0.2 amps	48-52	Exposed Systems
129416	DW 1018 Dynamit Nobel	1.4S	No	374 °F /15,800	HNS	Yes	0.8 amps	0.2 amps	48-52	Exposed Systems
154005	DW 1423 Dynamit Nobel	1.4B	No	446 °F / 21,000	HNS	Yes	0.8 amps	0.2 amps	48-52	Exposed Systems
132307	DW 1423 Dynamit Nobel	1.4S	No	446 °F/21,000	HNS	Yes	0.8 amps	0.2 amps	48-52	Exposed Systems
101272595	**RED® III** Top Fire	1.4S	Yes	375 °F	HMX	No	160 Volts DC	120 Volts DC	1 Meg	**SAFE** Cutters & DCST
100000432	JRC D1208, w/ A-161	1.4S	Yes	460 °F	HNS	No	0.8 amps	0.2 amps	50-55	Cutters & DCST
100010855	JRC Coil Tubing Cutter	1.4S	Yes	460 °F	HNS	No	0.8 amps	0.2 amps	50-55	Coil Tubing Cutters
101272602	**RED® III** Igniter Assy.	1.4G	Yes	375 °F	Blk Pwdr	No	160 Volts DC	120 Volts DC	1 Meg	**SAFE** Setting Tool & Chem Cutter
100004220	JRC GO™ Igniter	1.4G	Yes	425 °F	Blk Pwdr	No	0.8 amps	0.2 amps	50-55	Setting Tools
195364	A-96L Austin	1.4B	No	325 °F /15,000	RDX	No	0.8 amps	0.2 amps	50-55	Dump Bailers
100010578	0-86 DET-3050-115H	1.4S	No	425 °F/10,000	RDX	No	0.8 amps	0.2 amps	50-55	Dump Bailers
100158210	A-140 Austin	1.4B	No	350 °F	RDX	No	0.8 amps	0.2 amps	50-55	Utility Blasting Cap
100158201	EB-140 (Limited qty)	1.4B	No	325 °F	RDX	No	0.8 amps	0.2 amps	50-55	Utility Blasting Cap

Recommended Application Detonators

Part No.	Description	Recommended Applications
101272595	**RED® III** Top Fire	**SAFE** Top Fire for HSC
101272580	**RED® III** Block	**SAFE** Bottom Fire HSC
101007855	JRC Extended D1208 w/ A-161	Top Fire HSC
100008089	JRC Block , w/ E-140	Bottom Fire HSC
153993	DW 0015FD Dynamit Nobel	Hollow Steel Carriers
129417	DW 0015FD Dynamit Nobel	Hollow Steel Carriers
141442	A-161 Austin	Hollow Steel Carriers
154004	DW 0026FD Dynamit Nobel	Hollow Steel Carriers
129418	DW 0026FD Dynamit Nobel	Hollow Steel Carriers
100004157	G-21	Select Fire, HSC,
100000087	G-21 W/ 18 “ Lead Wires	Select Fire, HSC,
100014490	A-85 Austin	HSC , Select Fire
101272600	**RED® III** Plug In Capsulated	**SAFE** Exposed Systems
100005452	JRC HP/HT Capsulated w/ A-161	Exposed Systems
100158206	A-105 Austin	Exposed Systems
153991	DW Z-480 Dynamit Nobel	Exposed Systems
129415	DW Z-480 Dynamit Nobel	Exposed Systems
153990	DW 1019S Dynamit Nobel	Exposed Systems
129414	DW 1019S Dynamit Nobel	Exposed Systems
153992	DW 1018 Dynamit Nobel	Exposed Systems
129416	DW 1018 Dynamit Nobel	Exposed Systems
154005	DW 1423 Dynamit Nobel	Exposed Systems
132307	DW 1423 Dynamit Nobel	Exposed Systems
101272595	**RED® III** Top Fire	**SAFE** Cutters & DCST
100000432	JRC D1208, w/ A-161	Cutters & DCST
100010855	JRC Coil Tubing Cutter	Coil Tubing Cutters
101272602	**RED® III** Igniter Assy.	**SAFE** Setting Tool & Chem Cutter
100004220	JRC GO™ Igniter	Setting Tools
195364	A-96L Austin	Dump Bailers
100010578	0-86 DET-3050-115H	Dump Bailers
100158210	A-140 Austin	Utility Blasting Cap
100158201	EB-140 (Limited qty)	Utility Blasting Cap

Detonating Cords

							For International Air Shipping Only				*Recommended use:*		
Description	**Expl. Wt. gr/ft**	**Cover**	**Qty/ Box**	**Part No.**	**Ship Class**	**U.N. No.**	**Part No.**	**Ship Class**	**U.N. No.**	**Port Plug Guns**	**Scalloped Guns**	**Retrievable Through-Tubing Guns**	**Capsule Guns**
PETN - 225°F, 1 Hour													
Detonating Cord, Detotec	80	Plastic	500 ft	101001677	1.1D	0065	100157039	1.4D	0289				
Detonating Cord, EB	80	Plastic	500 ft	100010616	1.1D	0065	100158224	1.4D	0289				
Detonating Cord, EB	100	Plastic	500 ft	100109316	1.1D	0065		—	—				
RDX - 325°F, 1 Hour													
Slim Cord, Accurate	40	Lead	100 ft		1.1D	0290		—	—				
Slim Cord, EB	40	Nylon	500 ft	100000149	1.1D	0065	101208988	1.4D	0289		**Note 4**		
Detonating Cord, Detotec	80	Nylon	500 ft	101001678	1.1D	0065	100157033	1.4D	0289				
Detonating Cord, EB	80	Nylon	500 ft	100000107	1.1D	0065	100157021	1.4D	0289				
Detonating Cord LS, Detotec	80	Nylon	500 ft	101001669	1.1D	0065	100157034	1.4D	0289				**Note 1**
Detonating Cord LS, EB	80	Nylon	500 ft	100005308	1.1D	0065	100157019	1.4D	0289				**Note 1**
Detonating Cord XHV LS, Detotec	80	Nylon	500 ft	101001671	1.1D	0065	100157035	1.4D	0289				**Note 1**
Detonating Cord XHV LS, EB	80	Nylon	500 ft	100005339	1.1D	0065	100157022	1.4D	0289				
HMX - 400°F, 1 Hour													
Slim Cord LS, Accurate	35	Lead	100 ft	120125509	1.1D	0290		—	—				
Slim Cord LS, EB	40	Nylon	500 ft	100000363	1.1D	0065	101205518	1.4D	0289		**Note 4**		
Round Cord LS, EB	40	Nylon	500 ft	123994	1.1D	0065	123995	1.4D	0289				
Detonating Cord LS, Accurate	87	Lead	100 ft	100010620	1.1D	0290	100158211	1.4D	0289				**Note 2**
Detonating Cord LS, Detotec	80	Zytel	500 ft	100157032	1.1D	0065	100157036	1.4D	0289				**Note 2**
Detonating Cord LS, EB	80	Nylon	500ft	100000357	1.1D	0065	100157023	1.4D	0289				
Detonating Cord XHV LS, Detotec	80	Zytel	500 ft	101001672	1.1D	0065	100157037	1.4D	0289				**Note 2**
Detonating Cord XHV LS, EB	80	Nylon	500 ft	100005338	1.1D	0065	100157024	1.4D	0289				
HNS - 500°F, 1 Hour													
Slim Cord, Accurate	40	Lead	100 ft	100000531	1.1D	0290		—	—				
Detonating Cord, Dynamit Nobel	80	FEP	500 ft	100157001	1.1D	0065	100157000	1.4D	0289				
Detonating Cord, Accurate	87	Lead	100 ft	100000530	1.1D	0290	100157014	1.4D	0289				**Note 3**
PYX - 600°F, 1 Hour													
Detonating Cord, Accurate	35	Alum.	100 ft	100000427	1.1D	0290		—	—				
Detonating Cord, Accurate	100	Alum.	100 ft	100005304	1.1D	0290		—	—				
Detonating Cord, EB	80	Teflon	500 ft	100005337	1.1D	0065	100157025	1.4D	0289				

Shipping classifications and U.N. numbers subject to change. Verify before ordering.

Note 1: For conditions up to 300°F at 15,000 psi for one hour
Note 2: For conditions up to 350°F at 15,000 psi for one hour
Note 3: For conditions up to 450°F at 15,000 psi for one hour
Note 4: Required on 1 9/16, 2, and 2-1/2”-in. systems.

Specialty TCP Explosive Transfer Components

Type of Application	Part No.	Description	UN No.	Class	Where Used	Temp. Appl.
Mechanical Firing Heads	100005302	High-temp. initiator	UN0455	1.4S	All mechanical firing heads	ALL
Time Delay Firer and Extended Delay Assemblies	100014325	Delay element - TDF, 7-minute	UN0455	1.4S	TDF and EDA assemblies (3 $^{3}/_{8}$ in. and 2 $^{1}/_{2}$ in.)	ALL
	100005303	Primer assembly - high-temp.	UN0323	1.4S	TDF and EDA assemblies	ALL
	116970	Primer assembly - (Pacific Scientific) high-temp.	UN0044	1.4S	TDF and EDA assemblies	ALL
	100005307	Det. cord initiator - HMX	UN0257	1.4B	Use with TDF firing heads and swivel subs	RDX - HMX
	100005309	Det. cord initiator - NONA	UN0257	1.4B	Use with TDF firing heads and swivel subs	PYX
	100008016	Delay element - TDF, 6-minute	UN0267	1.4B	TDF and EDA assemblies (3 $^{3}/_{8}$ in. and 2 $^{1}/_{2}$ in.)	ALL
	100014344	Delay extension assy. - modular	UN0276	1.4C	TDF (1 $^{9}/_{16}$ in.) and multiaction firing heads	ALL
	100008255	Delay output assy. - modular	UN0276	1.4C	TDF (1 $^{9}/_{16}$ in.) and multiaction firing heads	ALL
Auto Release Firing Heads	100157043	Charge - drop bar initiator (peanut charge)	UN0441	1.4S	Autorelease firing heads and swivel subs	HMX
	100009746	Charge - venting device, PYX (peanut charge)	UN0441	1.4S	Autorelease firing heads and swivel subs	PYX
Multiaction and APF-C Firing Heads	100156989	Det. cord - shielded, mild, HNS	UN0103	1.4G	Multiaction and APF-C firing heads	ALL
	100008250	Det. cord - shielded, mild, HNS	UN0103	1.4G	Multiaction firing heads	ALL
	100005318	Initiator - high-temp., flyer plate	UN0323	1.4S	Multiaction and APF-C firing heads	ALL
Select Firing Systems	100014330	Initiator - PYX, special application	UN0267	1.4B	Isolation subs (select fire)	ALL
Gun Hanger Systems	100156988	Bolt - explosive, TCP	UN0456	1.4S	Gun hanger running tool	ALL
	100005315	Charge - 1 $^{3}/_{4}$, PYX/BRX	UN0441	1.4S	Gun hangers and 2 $^{3}/_{4}$-in. auto release firing heads	ALL
Explosive Train Connections	100005305	Booster - bidirectional, PYX	UN0367	1.4S	Gun connections and firing heads	PYX
	10008021	Booster - bidirectional, HMX	UN0367	1.4S	Gun connections and firing heads	HMX
	100005314	Booster - bidirectional - PYX/NONA	UN0384	1.4S	Gun connections and firing heads	PYX/NONA
Other	100015812	Det. assy. - N/E, HNS	UN0257	1.4B	Schlumberger	HNS

Setting Tool Igniters and Power Charges

*Baker Setting Tools

Description	Part No.
Power charge - #05 standard	100000350
Power charge - #10 standard	100000019
Power charge - #10 slow set	100000424
Power charge - #20 standard	100000425
Power charge - #20 slow set	100000375
Baker BP4S igniter	101001485
Baker BP3S igniter	100008018
Baker secondary igniter	100000128

*Jet Research Center parts are not warrantied, developed, or approved by Baker.

JRC Igniter Assemblies and Power Charges

Description	Part No.
Igniter fuse assy. - H.T.	100004220
Power charge - H.T., 1 $^{11}/_{16}$-in. Shorty	100004217
Power charge - L.T., 1 $^{11}/_{16}$-in. Shorty	100004218
Power charge - H.T., 1 $^{1}/_{2}$-in. Shorty	100007895
Power charge - L.T., 1 $^{1}/_{2}$-in. Shorty	100142915
Power charge - H.Y., 2 $^{1}/_{8}$-in. standard	100013374
Power charge - L.T., 2 $^{1}/_{8}$-in. standard	120002180
Power charge - H.T., 2 $^{1}/_{2}$-in. Shorty	100004221
Power charge - L.T., 2 $^{1}/_{2}$-in. Shorty	100013378
Power charge - H.T., 3 $^{1}/_{2}$-in. standard	100004223
Power charge - L.T., 3 $^{1}/_{2}$-in. standard	100013380
Power charge - H.T., 3 $^{1}/_{2}$-in. Shorty	100004224
Power charge - L.T., 3 $^{1}/_{2}$-in. Shorty	100004225
Power charge - H.T., 1 $^{3}/_{8}$-in. multistage	100004228
Power charge - H.T., 1 $^{11}/_{16}$-in. multistage	100004229
Power charge - L.T., 1 $^{11}/_{16}$-in. multistage	101223346
Power charge - H.T., 1 $^{11}/_{16}$-in. long-stroke	100004230
Power charge - H.T., 2 $^{1}/_{8}$-in. multistage	
Power charge - H.T., 3 $^{1}/_{4}$-in. multistage	100142986

Sidewall Core Gun Loads and Igniters

"G" Series				
Description	**Part No.**	**Quantity**	**Class**	**U.N. No.**
Core gun load - low 400, ft/sec.	100004188	A/R	1.4C	UN0278
Core gun load - high 400, ft/sec.	100004192	A/R	1.4C	UN0278
Core gun load - low 450, ft/sec.	100004189	A/R	1.4C	UN0278
Core gun load - high 450, ft/sec.	100004186	A/R	1.4C	UN0278
Core gun load - low 500, ft/sec.	100004190	A/R	1.4C	UN0278
Core gun load - high 500, ft/sec.	100004187	A/R	1.4C	UN0278
Core gun load - low 550, ft/sec.	100142074	A/R	1.4C	UN0278
Core gun load - high 550, ft/sec.	100071883	A/R	1.4C	UN0278
Core gun load - low 600, ft/sec.	100142075	A/R	1.4C	UN0278
Core gun load - high 600, ft/sec.	100142073	A/R	1.4C	UN0278
Core gun igniter	100004185	1/load	1.4G	UN0325
"W" Series				
Bullseye powder 8-lb can (3629 g)	101001504			

Jet Research Center offers a variety of field-proven, reliable pipe recovery equipment to satisfy the high demands in the oilfield industry. The equipment supplied by JRC undergoes extensive research and development prior to field release. Through continuous research and engineering efforts, JRC has achieved industry recognition as the innovator and leader in explosives technology equipment for pipe recovery. Throughout JRC's development of pipe recovery equipment, innovation has resulted in patented techniques and methods. One such patent is a method to attenuate shock from resulting detonation of a downhole cutting device (US patent 5,117,911). This device continues to be the preferred method for running tubing and casing cutters in our industry today. The following equipment is detailed in this section:

- Coiled Tubing Cutters
- Tubing Cutters
- Casing and Drillpipe Cutters
- C-4 Casing Cutters
- Drill Collar Severing Tools
- Junk Shots

Centralization is critical to the successful application of many of the explosive products offered in this section. Jet Research Center always recommends that effective centralization is employed for optimum results. For electric wireline operations, JRC recommends the following equipment. At least two centralizer assemblies are generally required for effective centralization. The Centralizer is supplied with $1\,^{3}/_{16}$-in. box/pin connections suitable for mating directly with the JRC $1^{1}/_{2}$-in. Firing Head.

Description	Part No.
Centralizer Body, 1 11/16 in.	72364
Bow Spring Max Open 13 1/4 in.	72363
Bow Spring Max Open 9 1/2 in.	114520
Bow Spring Max Open 6 1/4 in.	72362
Redress Kit, 1 11/16 in. Centralizer	133004

Note: 6 Bow Springs are required per assembled Centralizer.

Available Cutters Reference Table

Description	Part No.	Explosive Weight (g)	Housing Material	OD	Rating (psi / ºF)	Shipping Class
0.718” Coiled Tubing Cutter	100118388	1	S	0.718	10,000/325	1.4S UN0441
0.948” Coiled Tubing Cutter	100118389	2.9	S	0.948	10,000/325	1.4S UN0441
1-3/16” Coiled Tubing Cutter	100000429	4.7	S	1.188	10,000/325	1.4S UN0441
1-3/8” Tubing Cutter	100000569	4	S	1.400	15,000/400	1.4S UN0441
1-9/16” Tubing Cutter	100083086	4	C	1.563	15,000/400	1.4S UN0441
1-9/16” Super Cutter	100005493	40	S	1.563	20,000/400	1.4S UN0441
1-11/16” Tubing Cutter	100000352	8.5	C	1.688	20,000/400	1.4S UN0441
1-11/16” Tubing Cutter - Cast Iron	101288527	8.5	CI	1.688	12,500/400	1.4S UN0441
1-23/32” Tubing Cutter	100000570	8.5	C	1.719	20,000/400	1.4S UN0441
1-13/16” Tubing Cutter	100000353	8.5	C	1.813	20,000/400	1.4S UN0441
1-13/16” Tubing Cutter - Cast Iron	101290400	8.5	CI	1.813	12,500/400	1.4S UN0441
1-13/16” Super Cutter	100008057	40	S	1.813	20,000/400	1.4S UN0441
2-1/32” Tubing Cutter	100000354	15.4	C	2.031	20,000/400	1.4S UN0441
2-1/8” Tubing Cutter	100000355	15.4	C	2.125	20,000/400	1.4S UN0441
2-1/8” Tubing Cutter - Cast Iron	101290402	15.4	CI	2.125	12,500/400	1.4S UN0441
2-1/8” Hastelloy Tubing Cutter	100000430	33	C	2.125	20,000/400	1.1D UN0059
2-1/4” Tubing Cutter	100000356	13	C	2.250	20,000/400	1.4S UN0441
2-1/4” Tubing Cutter - Cast Iron	101290405	13	CI	2.250	12,500/400	1.4S UN0441
2-1/2” Tubing Cutter - Cast Iron	101290406	22	CI	2.500	12,500/400	1.4S UN0441
2-19/32” Tubing Cutter	100116367	22.5	C	2.594	20,000/400	1.4S UN0441
2.70” Tubing Cutter	100011034	22.5	C	2.700	20,000/400	1.4S UN0441
2.70” Hastelloy Tubing Cutter	100000431	46	C	2.700	20,000/400	1.1D UN0059
2-3/8” Drill Pipe Cutter	100116368	22	S/A	2.375	16,000/400	1.4S UN0441
2-15/16” Drill Pipe Cutter	100127821	47.4	S/A	2.938	16,000/400	1.1D UN0059
3-5/16” Drill Pipe Cutter	100000140	61	S/A	3.313	12,000/400	1.1D UN0059
3-5/8” Casing Cutter	101293449	54	A	3.625	9,200/400	1.1D UN0059
4” Casing Cutter	101293457	110	S/A	4.000	17,000/400	1.1D UN0059
4-1/2” Casing Cutter	100014494	100	S/A	4.500	17,000/400	1.1D UN0059
4-3/4” Casing Cutter	101293484	100	S/A	4.750	17,000/400	1.1D UN0059
5-3/8” Casing Cutter	101293491	240	S/A	5.375	13,000/400	1.1D UN0059
5-1/2” Casing Cutter	101293515	253	A	5.500	9,000/400	1.1D UN0059
6” Casing Cutter	101293536	280	A	6.000	9,000/400	1.1D UN0059
6-1/8” Casing Cutter	101293544	253	A	6.125	9,700/400	1.1D UN0059
7-1/4” Casing Cutter	101293553	373	A	7.250	8,000/400	1.1D UN0059
8-3/16” Casing Cutter	101293555	407	A	8.188	8,000/400	1.1D UN0059

Housing Materials:

S = Steel
A = Aluminum
S/A = Steel/Aluminum
C = Ceramic
CI = Cast Iron

Notes:

1. Refer to Cutter Selection Tables for recommended targets.

Jet Research Center's Coiled Tubing Cutters are designed to cleanly sever common sizes of tubing quickly and economically. These proven design cutters are widely used and have an unsurpassed performance record.

Applications

- Cuts common sizes and makes of coiled tubing
- Compatible with industry standard wireline accessories
- Can be designed with high temperature explosives for special applications

Features

- High strength steel components allow successful trip inside the coiled tubing.
- Corrosion resistant components

Options

- Cutters sizes available for 1-, 1 $^{1}/_{4}$-, 1 $^{1}/_{2}$-, 1 $^{3}/_{4}$-in. coiled tubing
- 1 $^{3}/_{8}$-in. cutter suitable for cutting 1 ½-in (1.900) NU API tubing

Benefits

- Designed for use with industry-leading safe arming equipment
- Superior reliability
- Most frequently used cutter for coiled tubing application

Coiled Tubing Cutter Accessories

Item	Description	Part No.
1	0.718 in. Coiled Tubing Cutter	100118388
	0.948 in. Coiled Tubing Cutter	100118389
	1 $^{3}/_{16}$ in. Coiled Tubing Cutter	100000429
	1 $^{3}/_{8}$ in. Coiled Tubing Cutter	100000569
2	Detonator Assembly, Resistorized	100010855
Contact Sub Options		
3	$^{5}/_{8}$-in. OD Cont Sub(1.59 cm)	100005498
	$^{3}/_{4}$-in. OD Cont Sub (1.91 cm)	100158243
	1-in. OD Cont Sub (2.54 cm)	100014497
Shunt Plug/Thread Protector Options		
4	$^{5}/_{8}$ in. Shunt Plug	100158235
	$^{3}/_{4}$ in. Shunt Plug	120042542
	1-in. Shunt Plug	120042541
5	Safety Tube for Detonator	100158234
Contact Sub Thread Specifications		
$^{5}/_{8}$ in.	0.5-20 UNF-2A	
$^{3}/_{4}$ in.	0.555-28P-36-SA	
1 in.	0.812-16 UN-2A	

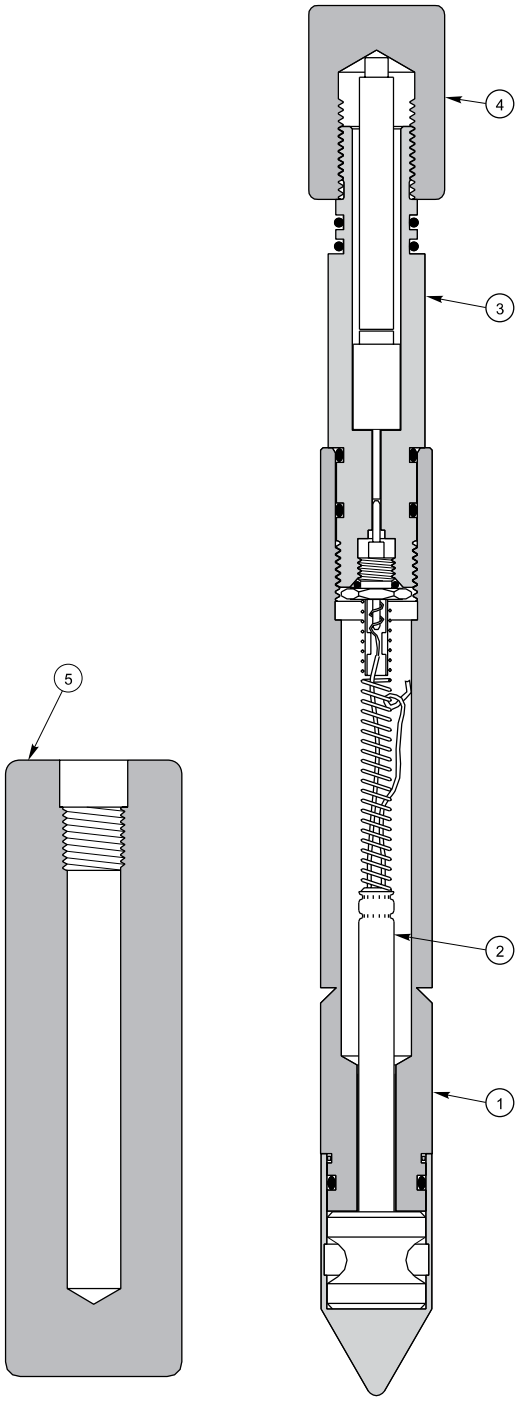

Coiled Tubing Cutters

Coiled Tubing Cutters Selection Table

Description	Part No.	Explosive Weight (g)	Housing Material	Cutter OD (in)	Rating (psi / ºF)	Shipping Class	RECOMMENDED TARGET TUBING			
							in.	Grade	Wall Th.	Weight (Incl Coupl.) lb/ft
0.718” Coiled Tubing Cutter	100118388	1	S	0.718	10,000/325	1.4S UN0441	1.00	N80	0.081	0.786
0.948” Coiled Tubing Cutter	100118389	2.9	S	0.948	10,000/325	1.4S UN0441	1.25	N80	0.095	1.172
1-3/16” Coiled Tubing Cutter	100000429	4.7	S	1.188	10,000/325	1.4S UN0441	1.50	N80	0.109	1.619
1-3/8” Tubing Cutter	100000569	4	S	1.375	15,000/400	1.4S UN0441	1.75	N80	0.134	2.313
							1.90	P105	0.145	2.900

Housing Materials:

S= Steel

Notes:

1. Always run effective centralization for optimum results.
2. Undersized cutters may not make a full cut.
3. When more than one cutter is available for the specification, always select the largest diameter cutter.

Jet Research Center's Tubing Cutters are designed to cleanly sever a wide range of tubing quickly and efficiently. These proven design cutters are the world's most widely used and have a performance record that is unsurpassed. The tubing cutter range includes industry-leading ceramic cap designs for minimum debris to economic cast iron versions for cost-effective solutions. JRC Tubing Cutters offer high reliability in field applications with a minimum amount of set-up or configuration based on well parameters. JRC Tubing Cutters and method of assembly are patented technology (US Patent 5,129,322). Tubing Cutters can be used with JRC's Proprietary Rig Environment Detonator - RED - offering a high level of protection against stray voltage or inadvertent RF-initiation.

Features

- High strength ceramic cap provides 20,000 psi pressure rating.
- Breakup characteristic of the ceramic design leaves minimal debris in the well.
- Cutter design features minimum flare characteristic for ease of recovery

Tubing Cutters Accessories

Item	Description	Part No.
1	1-9/16" Tubing Cutter	100083086
	1-11/16" Tubing Cutter	100000352
	1-11/16" Tubing Cutter	101288527
	1-23/32" Tubing Cutter	100000570
	1-13/16" Tubing Cutter	100000353
	1-13/16" Tubing Cutter	101290400
	2-1/32" Tubing Cutter	100000354
	2-1/8" Tubing Cutter	100000355
	2-1/8" Tubing Cutter	101290402
	2-1/8" Hastelloy Tubing Cutter	100000430
	2-1/4" Tubing Cutter	100000356
	2-1/4" Tubing Cutter	101290405
	2-1/2" Tubing Cutter	101290406
	2-19/32" Tubing Cutter	100116367
	2.70" Tubing Cutter	100011034
	2.70" Hastelloy Tubing Cutter	100000431
2A	Detonator - **RED**™	101272595
2B	Detonator - Resistorized	100000432
3	Firing Head , $1^1/_2$-in. OD	100000434
4A	Adapter for **RED**™ Detonator	101293676
5	Shunt Plug	100010861
6A	Extension Mandrel	100008258
7	Safety Tube	100010862
	HP Accessories	
4B	Adapter for **RED**™ - Steel	101293230
6B	Extension Mandrel - Steel	101293227

Note: For High Pressure application, in excess of 15,000 psi, JRC recommends the use of high pressure rated accessories.

Options

- Extensive cutter range offers selection based on well conditions
- Cutters available for high strength and chrome material
- Special designs available to match unique well conditions.
- Detonator options available to satisfy all applications

Benefits

- Tubing cutting performance based on leading technology
- Technical customer support always available

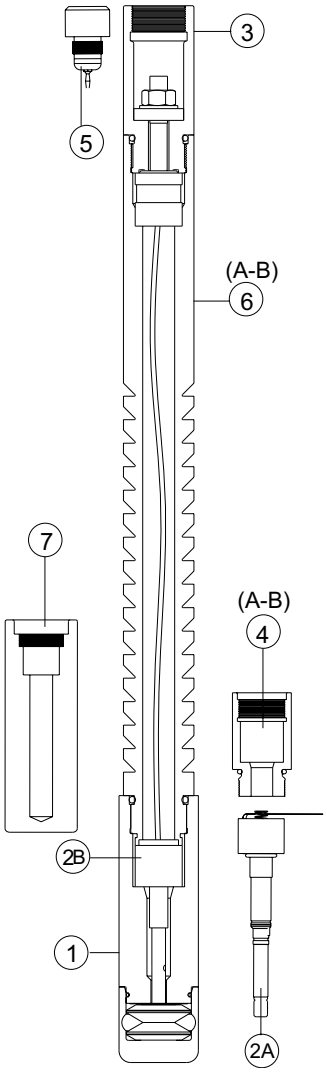

Tubing Cutters

Tubing Cutters Selection Table

Description	Part No.	Explosive Weight (g)	Housing Material	Cutter OD (in.)	Rating (psi / ºF)	Shipping Class	RECOMMENDED TARGET TUBING			
							OD in.	Grade	Wall Th.	Weight (Incl coupl.) lb/ft
1-9/16” Tubing Cutter	100083086	4	C	1.563	15,000/400	1.4S UN0441	2-1/16	P105	0.216	3.25
1-11/16” Tubing Cutter	100000352	8.5	C	1.688	20,000/400	1.4S UN0441	2-3/8	P105	0.190 - 0.254	4.70 - 5.95
1-11/16” Tubing Cutter - Cast Iron	101288527	8.5	CI	1.688	12,500/400	1.4S UN0441	2-3/8	P105	0.190 - 0.254	4.70 - 5.95
1-23/32” Tubing Cutter	100000570	8.5	C	1.719	20,000/400	1.4S UN0441	2-3/8	P105	0.190 - 0.254	4.70 - 5.95
1-13/16” Tubing Cutter	100000353	8.5	C	1.813	20,000/400	1.4S UN0441	2-3/8	P105	0.190 - 0.254	4.70 - 5.95
1-13/16” Tubing Cutter - Cast Iron	101290400	8.5	CI	1.813	12,500/400	1.4S UN0441	2-3/8	P105	0.190 - 0.254	4.70 - 5.95
2-1/32” Tubing Cutter	100000354	15.4	C	2.031	20,000/400	1.4S UN0441	2-7/8	P105	0.308	8.70
2-1/8” Tubing Cutter	100000355	15.4	C	2.125	20,000/400	1.4S UN0441	2-7/8	P105	0.217	6.50
2-1/8” Tubing Cutter - Cast Iron	101290402	15.4	CI	2.125	12,500/400	1.4S UN0441	2-7/8	P105	0.217	6.50
2-1/8” Hastelloy Tubing Cutter	100000430	33	C	2.125	20,000/400	1.4S UN0441	2-7/8	Chrome	0.276	7.90
2-1/4” Tubing Cutter	100000356	13	C	2.250	20,000/400	1.4S UN0441	2-7/8	P105	0.217	6.50
2-1/4” Tubing Cutter - Cast Iron	101290405	13	CI	2.250	12,500/400	1.4S UN0441	2-7/8	P105	0.217	6.50
2-1/2” Tubing Cutter - Cast Iron	101290406	22	CI	2.500	12,500/400	1.4S UN0441	3-1/2	P105	0.254 - 0.449	9.3 - 15.50
2-19/32” Tubing Cutter	100116367	22.5	C	2.594	20,000/400	1.4S UN0441	3-1/2	P105	0.254 - 0.289	9.30 - 10.30
2.70” Tubing Cutter	100011034	22.5	C	2.700	20,000/400	1.4S UN0441	3-1/2	P105	0.254 - 0.289	9.30 - 10.30
2.70” Hastelloy Tubing Cutter	100000431	46	C	2.700	20,000/400	1.1D UN0059	3-1/2	Chrome	0.254 - 0.289	9.30 - 10.30

Housing Materials:

C = Ceramic Bottom
CI = Cast Iron Bottom

Notes:

1. Always run effective centralization for optimum results.
2. Undersized cutters may not make a full cut.
3. When more than one cutter is available for the specified target, always select the largest diameter cutter.

Jet Research Center's Super Tubing Cutters are designed where well conditions prevent the use of a conventional tubing cutter based on unexpected or severe restrictions. In this situation, a specially designed cutting charge is used. The cutter is based on a conventionally shaped charge assembly but has additional explosive in the form of a pelletized charge in the base of the cutter. It is a smaller diameter than a conventional charge for the pipe to be cut. The cutter can easily pass through tight restrictions and still achieve severance. Based on the design constraints, some tubing deformation at the cut point is likely with this cutter. Super Tubing Cutters can be used with JRC's Proprietary Rig Environment Detonator - RED® - offering a high level of protection against stray voltage or inadvertent RF-initiation.

Features

- High strength steel cap provides 20,000 psi pressure rating.
- Reduced diameter easily passes wellbore restrictions
- Detonator options available to satisfy all applications

Options

- Two cutter sizes for common tubing sizes
- Special designs available to match unique well conditions

Benefits

- Field assembly support always available
- Technical customer support always available

Super Tubing Cutter Accessories

Item	Description	Part No.
1	1 $^{9}/_{16}$ in. Super Cutter	100005493
	1 $^{13}/_{16}$ in. Super Cutter	100008057
2A	Detonator - **RED**™	101272595
2B	Detonator - Resistorized	100000432
3	Firing Head , 1$^{1}/_{2}$-in. OD	100000434
4A	Adapter for Cutter **RED**™	101293676
5	Shunt Plug	100010861
6A	Extension Mandrel	100008258
7	Safety Tube	100010862
HP Accessories		
4B	Adapter for **RED**™ - Steel	101293230
6B	Extension Mandrel - Steel	101293227

Note: For High Pressure application, in excess of 15,000 psi, JRC recommends the use of high pressure rated accessories.

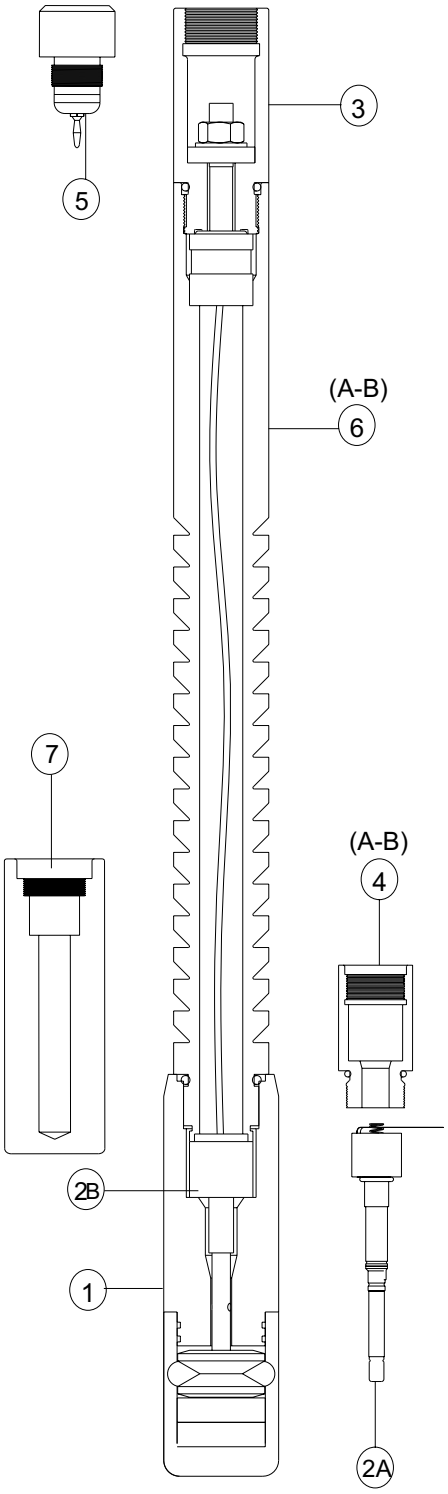

Super Tubing Cutters

Super Tubing Cutters Selection Table

Description	Part No.	Explosive Weight (g)	Housing Material	Cutter OD (in)	Rating (psi / ºF)	Shipping Class	RECOMMENDED TARGET TUBING			
							in.	Grade	Wall Th.	Weight (Incl Coupl.) lb/ft
1-9/16” Super Cutter	100005493	40	S	1.563	20,000/400	1.4S UN0441	2-3/8	N80	0.190 - 0.254	4.70 - 5.95
1-13/16” Super Cutter	100008057	40	S	1.813	20,000/400	1.4S UN0441	2-7/8	N80	0.217 - 0.308	6.50 - 8.70

Housing Materials:

S = Steel

Notes:

1. Undersized cutters may not make a full cut.
2. Always run effective centralization for optimum results.
3. Field assembly required due to shipping features.
4. **CAUTION: Not recommended for casing sizes less than 7”.**

Jet Research Center's Casing and Drillpipe Cutters feature the same level of engineering detail and design as the industry-leading JRC tubing cutters. They are designed to cleanly sever a wide range of casing efficiently, using a minimum amount of explosive. The designs feature high specification aluminum alloy case material that breaks up substantially upon detonation. JRC Casing and Drillpipe Cutters offer high levels of safety and reliability in field applications with a minimum amount of set-up or configuration based on well parameters. JRC developed the industry standard shock attenuating mandrel for use with the range of Casing and Drillpipe Cutters and patented this technology (US patent 5,117,911). Casing and Drillpipe Cutters can be used with JRC's Proprietary Rig Environment Detonator - RED® - offering a high level of protection against stray voltage or inadvertent RF-initiation.

Casing Cutter Accessories

Item	Description	Part No.
1	2-3/8" Drill Pipe Cutter	100116368
	2-15/16" Drill Pipe Cutter	100127821
	3-5/16" Drill Pipe Cutter	100000140
	3-5/8" Casing Cutter	101293449
	4" Casing Cutter	101293457
	4-1/2" Casing Cutter	100014494
	4-3/4" Casing Cutter	101293484
	5-3/8" Casing Cutter	101293922
	5-1/2" Casing Cutter	101293515
	6" Casing Cutter	101293536
	6-1/8" Casing Cutter	101293923
	7-1/4" Casing Cutter	101293553
	8-3/16" Casing Cutter	102193555
2A	Detonator - **RED**™	101272595
2B	Detonator - Resistorized	100000432
3	Shunt Plug	100010861
4	Firing Head , 1-1/2 in. OD	100000434
5A	Extension Mandrel	100008258
6A	Adapter for **RED**™ Detonator	101293676
7A	Adapter for Resistorized Detonator	100014468
8	Protective Detonator Holder	100010862
HP Accessories		
5B	Extension Mandrel - Steel	101293227
6B	Adapter for **RED**™ - Steel	101293230
7B	Adapter for Resistorized Detonator	101293240

Note:
1. Item 7 is supplied with the Casing Cutter
2. Item 6 is used in place of Item 7 when running RED.
3. For High Pressure application, in excess of 15,000 psi, JRC recommends the use of high pressure rated accessories.

Features

- Shock attenuating mandrel helps protect associated wireline tools
- Cutter designed for minimum pipe flare

Options

- Extensive cutter range offers selection based on well conditions
- Cutters available for high-strength and chrome pipes
- Special designs available to match unique well conditions
- Detonator options available to satisfy all applications

Benefits

- Field assembly support always available
- Technical customer support always available

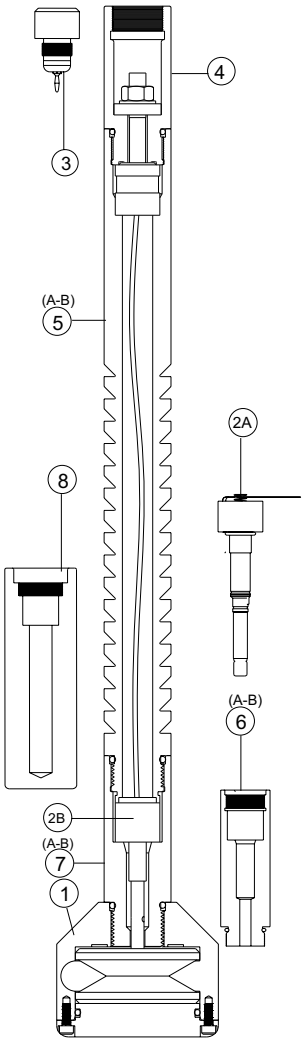

Casing and Drillpipe Cutters

Casing and Drillpipe Cutters Selection Table

Description	Part No.	Explosive Weight (g)	Housing Material	Cutter OD in	Rating (psi / ºF)	Shipping Class	RECOMMENDED TARGET CASING			
							OD in.	Grade	Wall Th.	Weight (Incl coupl.) lb/ft
2-3/8” Drill Pipe Cutter	100116368	22	S/A	2.375	16,000/400	1.4S UN0441	3-1/2 DP	G105	0.254 - 0.449	9.5 - 15.5
2-15/16” Drill Pipe Cutter	100127821	47.4	S/A	2.938	16,000/400	1.1D UN0059	4	L80	0.262 - 0.380	11.85 - 15.7
							4-1/2 DP	G105	0.271 - 0.430	13.75 - 20.00
3-5/16” Drill Pipe Cutter	100000140	61	S/A	3.313	12,000/400	1.1D UN0059	4-1/2 DP	G105	0.430	20.00
							5 DP	G105	0.296 - 0.500	16.25 - 25.60
3-5/8” Casing Cutter	101293449	54	A	3.625	9,200/400	1.1D UN0059	4-1/2	L80	0.205 - 0.337	9.50 - 15.10
4” Casing Cutter	101293457	110	S/A	4.000	17,000/400	1.1D UN0059	5	L80	0.253 - 0.437	11.50 - 21.40
							5 DP	G105	0.296 - 0.362	16.25 - 19.50
4-1/2” Casing Cutter	100014494	100	S/A	4.500	17,000/400	1.1D UN0059	5-1/2	L80	0.304 - 0.415	17.00 - 23.00
4-3/4” Casing Cutter	101293484	100	S/A	4.750	17,000/400	1.1D UN0059	5-1/2	L80	0.244 - 0.304	14.00 - 17.00
							5-3/4	L80	0.330 - 0.430	19.50 - 25.20
5-3/8” Casing Cutter	101293491	240	S/A	5.375	13,000/400	1.1D UN0059	6	L80	0.224 - 0.275	14.00 - 17.00
							6-5/8	L80	0.475	32.00
5-1/2” Casing Cutter	101293515	253	A	5.500	9,000/400	1.1D UN0059	6-5/8	L80	0.228 - 0.417	20.00 - 28.00
							7	L80	0.408 - .0540	29.00 - 38.00
6” Casing Cutter	101293536	280	A	6.000	9,000/400	1.1D UN0059	7	L80	0.317 - 0.408	23.00 - 29.00
6-1/8” Casing Cutter	101293544	253	A	6.125	9,700/400	1.1D UN0059	7-5/8	L80	0.375 - 0.500	29.70 - 39.00
7-1/4” Casing Cutter	101293553	373	A	7.250	8,000/400	1.1D UN0059	8-5/8	L80	0.400 - 0.595	36.00 - 52.00
8-3/16” Casing Cutter	101293555	407	A	8.188	8,000/400	1.1D UN0059	9-5/8	L80	0.435 - 0.545	43.50 - 53.50

Housing Materials:

S/A = Steel/Aluminum
A = Aluminum

Notes:

1. Always run effective centralization for optimum results.
2. Undersized cutters may not make a full cut.
3. When more than one cutter is available for the specified target, always select the largest diameter cutter.

Jet Research Center's C-4 Casing Cutters are designed to allow air transportation (via commercial aircraft) of the explosives in individual packages. Air freight allows for rapid shipment of urgently needed cutters and is considerably less expensive than transportation by sea. Upon arrival at the location, the explosive can then be placed in the cutter body and run in the well. The C-4 Cutters then function as traditional cutters, except for their reduced temperature limitation. This product line uses the same safe-arming procedures as the popular tubing, drillpipe and normal casing cutters. It allows the detonator to be electronically connected safely before the detonator is placed in proximity to the cutting charge.

Applications

- Emergency situation where the cutter must be flown to wellsite
- Temperature limitation of 225 °F
- Pressure limitations depend on the size of the cutter

Features

- Patented shock absorber mandrel helps protect CCLs and other associated hardware
- Aluminum case components allow easy breakup of components into debris
- Detonation options available to satisfy all applications

C-4 Casing Cutter Accessories

Item	Description	Part No.
1	C-4 Casing Cutter	See Back Page
2A	Detonator - **RED**®	101272595
2B	Detonator - Resistorized	100000432
3	Firing Head , 1-$^1/_2$ in. OD	100000434
*4A	Extension Mandrel	100008258
5A	Adapter for **RED**® Detonator	101295128
*6A	Adapter for Resistorized Detonator	100014468
7	Shunt Plug	100010861
8	Protective Detonator Holder	100010862
HP Accessories		
4B	Extension Mandrel - Steel	101293227
5B	Adapter for **RED**® - Steel	101295134
6B	Adapter for Resistorized Detonator - Steel	101293240

Note:
1. For High Pressure application, in excess of 15,000 psi, **JRC** recommends the use of high pressure rated accessories.
2. Item 6 is used in place of Item 7 when running **RED**®.

Options

- Available in sizes to cut 4 1/2-in. to 9 5/8-in. casing
- Upon request, test shots can be made in special pipe to verify performance

Benefits

- Backed by JRC's research and engineering technology
- Economical because of lower shipping costs (commercial airfreight vs. sea or air charter)

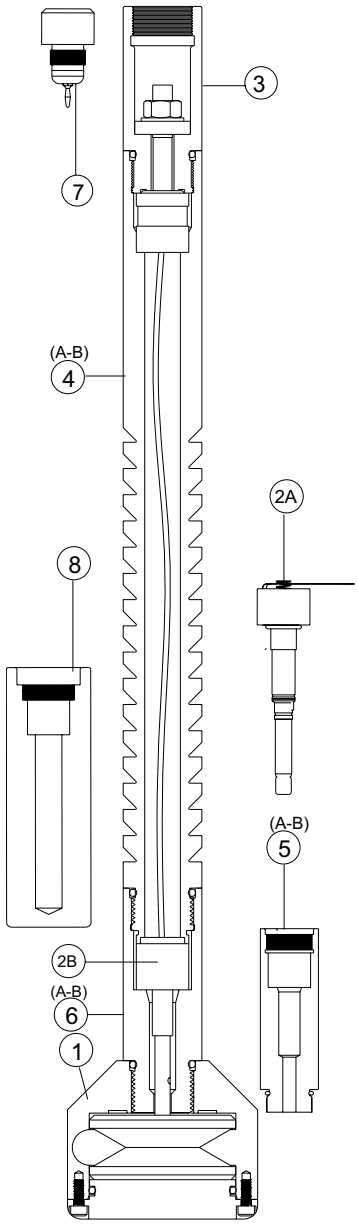

C-4 Casing Cutters

3 5/8 in.

Description	Part No.
Hardware Kit	100158064
Booster Pellet (1 ea. req.)	100158222
C-4 Cartridge (7 ea. req.)	100141897
Booster Rod (1 ea. req.)	100158155

4 in.

Description	Part No.
Hardware Kit	100158065
Booster Pellet (1 ea. req.)	100158222
C-4 Cartridge (7 ea. req.)	100141897
Booster Rod (1 ea. req.)	100158152

4 1/2 in.

Description	Part No.
Hardware Kit	100158066
Booster Pellet (1 ea. req.)	100158222
C-4 Cartridge (6 ea. req.)	100141897
Booster Rod (1 ea. req.)	100158153

4 3/4 in.

Description	Part No.
Hardware Kit	100158067
Booster Pellet (1 ea. req.)	100158222
C-4 Cartridge (6 ea. req.)	100141897
Booster Rod (1 ea. req.)	100158153

5 3/8 in.

Description	Part No.
Hardware Kit	101289681
Booster Pellet (1 ea. req.)	100158222
C-4 Cartridge (14 ea. req.)	100141897
Booster Rod (1 ea. req.)	101293552

5 1/2 in.

Description	Part No.
Hardware Kit	100158068
Booster Pellet (1 ea. req.)	100158222
C-4 Cartridge (15 ea. req.)	100141897
Booster Rod (1 ea. req.)	100158223

6 in.

Description	Part No.
Hardware Kit	100158069
Booster Pellet (1 ea. req.)	100158222
C-4 Cartridge (16 ea. req.)	100141897
Booster Rod (1 ea. req.)	120021223

6 1/8 in.

Description	Part No.
Hardware Kit	120021659
Booster Pellet (1 ea. req.)	100158222
C-4 Cartridge (15 ea. req.)	100141897
Booster Rod (1 ea. req.)	100158223

7 1/4 in.

Description	Part No.
Hardware Kit	101289693
Booster Pellet (1 ea. req.)	100158222
C-4 Cartridge (22 ea. req.)	100141897
Booster Rod (1 ea. req.)	100158154

8 3/16 in.

Description	Part No.
Hardware Kit	100158217
Booster Pellet (2 ea. req.)	100158222
C-4 Cartridge (24 ea. req.)	100141897
Booster Rod (1 ea. req.)	100158155

Drill Collar Severing Tool

Jet Research Center developed the Dual End Severing Tool for severing thick wall tubulars over 20 years ago. The technique is based on the Colliding Shock Wave Principle. Since its inception, the Drill Collar Severing Tool has been continuously refined, resulting in the industry-leading severance device for cutting drill collars and drillpipe in a wide variety of stuck pipe scenarios. The latest refinement to the tool has resulted in a standard explosive column length with superior performance. The secret to the success of the tool lies in the precisely-timed detonation of two equal and opposing shock fronts. The colliding shock is matched to a cartridge assembly at the mid-point of the assembly, designed to help focus the energy transmitted to the target. JRC developed the industry standard shock attenuating mandrel for use with Drill Collar Severing Tools and patented this technology (US patent 5,117,911). Drill Collar Severing Tools can be used with JRC's Proprietary Rig Environment Detonator - RED® - offering a high level of protection against stray voltage or inadvertent RF-initiation.

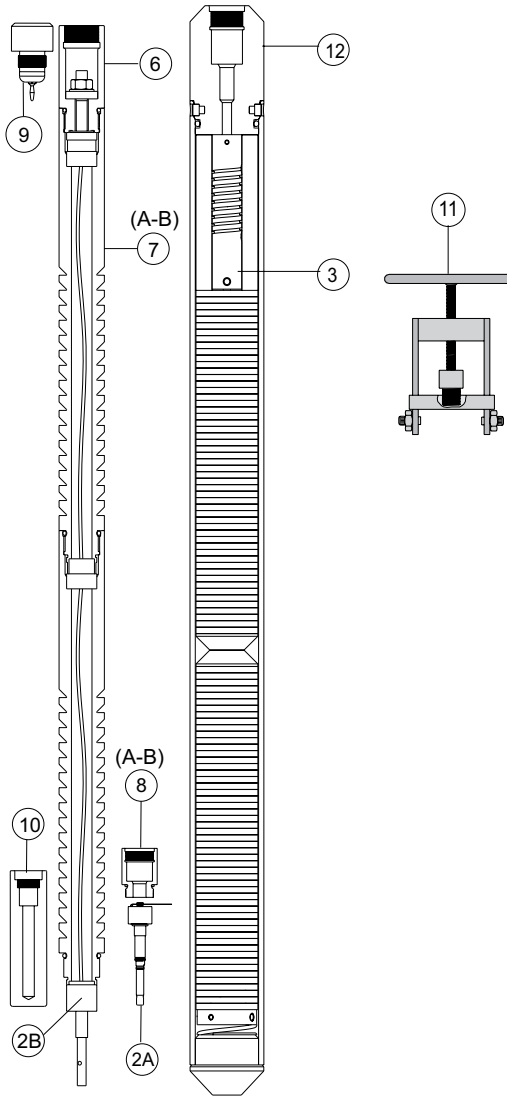

Drill Collar Severing Tool

Features

- New design introduced in 2002 for maximum performance
- Full range of sizes for virtually any severing requirement
- Suitable for hostile environment up to 400 °F and 20,000 psi
- Higher temperature tools available for extreme temperature application
- Shock attenuating mandrel helps protect wireline tools

Benefits

- Rapid assembly and deployment saves rig time
- Industry standard connections can be run on any wireline unit
- Proven track record with unmatched performance
- Air freight classification (1.4s) provides rapid mobilization
- Dependable industry-proven technology

Drill Collar Capability Chart

Tool OD	1 3/8 in. (3.5cm)	1 3/4 in. (4.4cm)	2 in. (5.1cm)	2 5/8 in. (6.7cm)
Temperature and Pressure Rating	HMX - 400ºF (204ºC) 20,000 psi (138 Mpa) for 1 hour			
	HNS - 475ºF (246ºC) 20,000 psi (138 Mpa) for 1 hour			
Length	36 in.	36 in.	36 in.	36 in.
Designed to Sever up to	3 1/2 in. OD DC's	6 1/2 in. OD DC's	8 in. OD DC's	11 in. OD DC'c
Explosive pellet weight	22.7g	22.7g	22.7g	22.5g
Cartridge Assy Explo. wt	4.8g	12.7g	17.4g	22.7g
Loaded tool wt	645g	1115g	1488g	2430g

www.jetresearch.com • 8432 South I-35 West • Alvarado,Texas 76009-9775 • PHONE: 817-761-2000 • FAX: 817-783-5812

Drill Collar Severing Tool

Item	Description	1 3/8-in. OD	1 3/4-in. OD	2-in. OD	2 5/8-in. OD
*1	Hardware Kit	100118390	101292915	101292956	101292957
2A	Detonator - **RED**®	101272595	101272595	101272595	101272595
2B	Detonator - Resistorized	100000432	100000432	100000432	100000432
3	MDF	100118417	100118417	100118417	100118417
*4	Explosive Kit (HMX) Pellets and Cartridges	101214053	101293167	101293168	101293152
*5	Explosive Kit (HNS) Pellets and Cartridges	101237459	101293207	101293234	101293235
6	Firing Head	100118430	100000434	100000434	100000434
7A	Extension Mandrel	100158260	100008258	100008258	100008258
8A	Adapter for **RED**® Detonator	120042268	101293676	101293676	101293676
9	Shunt Plug	100118431	100010861	100010861	100010861
10	Protective Holder	100010862	100010862	100010862	100010862
11	Loading Tool	100118432	100118432	100118432	100118432

* Not Shown In Drawing

Notes:

1. Hardware Kit includes all items required for a standard tool, including 2 each of item 7.
2. Items 6, 8, 9, 10 & 11 must be ordered separately, as required.
3. An additional shock mandrel (Item 7) may be used for added shock protection.
4. For High Pressure application, in excess of 15,000 psi, JRC recommends the use of high pressure rated accessories.

HP Accessories

Item	Description	1 3/8-in. OD	1 3/4-in. OD	2-in. OD	2 5/8-in. OD
7B	Ext Mandrel - Steel	101293225	101293227	101293227	102193227
8B	Adapter for **RED**® - Steel	N/A	101293230	102193230	101293230
12	DCST Adapter - Steel	N/A	101293169	101293187	101293220

Jet Research Center's Junk Shots have been field-proven time after time in a wide variety of applications all over the world. The Junk Shot charge has been used to overcome some of the most challenging fishing operations encountered, ranging from breaking up complete drilling bits to underreamer arms. The Junk Shot is a large downward shooting shaped charge secured inside a pressure housing. When placed on top of the junk, it functions in a similar manner as a perforating charge, but the explosive effect is substantially greater, with the ability to destroy large targets. In almost any situation, the use of the Junk Shot charge to break up obstacles downhole reduces costly fishing time, returning the rig to full operation.

Features

- Main charge can be run on wireline, drillstring, or tubing with a secondary wireline initiator for maximum effect.
- Two sizes of charge available -- 5 ¼ in. OD and 7 ¾ in. OD
- The tools may be clustered for special applications.
- Can be transported via air charter or standard ground services
- Pressure rated to 18,000 psi
- Temperature rated to 400 °F for one hour

Benefits

- Substantially reduces costly fishing and rig time
- Removes the need for complicated fishing/ milling tools
- Offers a high degree of safety due to its two-stage deployment
- Offers a safe assembly method through the use of JRC's safe arming equipment
- Can be run on wireline or tubing
- Can be fired electronically or hydraulically

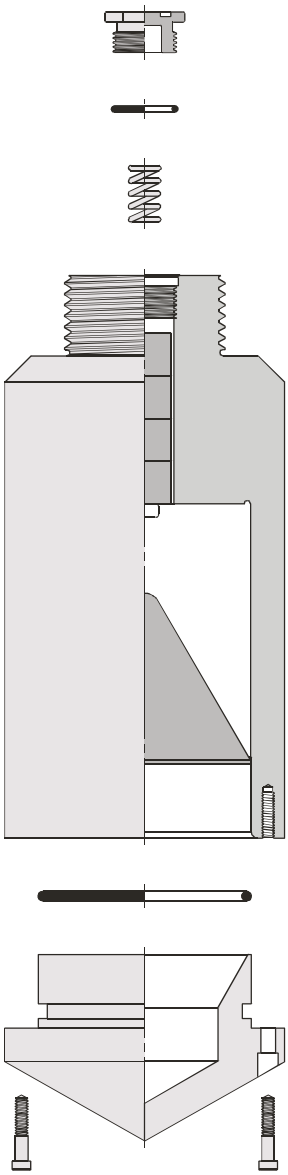

Junk Shot

Junk Shot Accessories

Description	Part No.
5 1/4-in. OD Junk Shot	
Hardware Kit	100118436
Charge Assy. - Junk Shot, HMX	100157003
Initiating Charge	101293561
Detonator Assy.	100000432
7 3/4-in. OD Junk Shot	
Hardware Kit	100118439
Charge Assy. - Junk Shot, HMX	100157002
Initiating Charge	101293561
Detonator Assy.	100000432

Note: Junk Shot Hardware Kit includes all items required for assembly of Junk Shot onto drillstring (including circulating crossover) and assembly of initiating charge for wireline deployment.

Jet Research Center's firing systems and ancillary equipment products are intended to be safe, versatile, and modular, offering state-of-the-art TCP completion solutions that can be tailored to specific customer needs. These systems are designed for a variety of applications, including high temperature, horizontal, and time-delay, which make the tool selection customizable and the job easier.

Mechanical Firing Head

The Extended Mechanical Firing Head (MFH) is a special application tool. It should be used only when well conditions preclude the use of an alternate firing device. Whenever it is used on a job, the MFH must be used as prescribed by appropriate tool manuals.

Operation

The operation of the MFH depends on the amount of force delivered to the firing pin by the detonating bar. The firing pin must be hit with enough force to shear the spiral pin, which holds the firing pin in place, and to detonate the initiator. The firing pin is driven into a percussion detonator, which fires the guns.

The Detonation Interruption Device (DID) and a minimum of 10 ft of safety space must always be used with the Mechanical Firing Head.

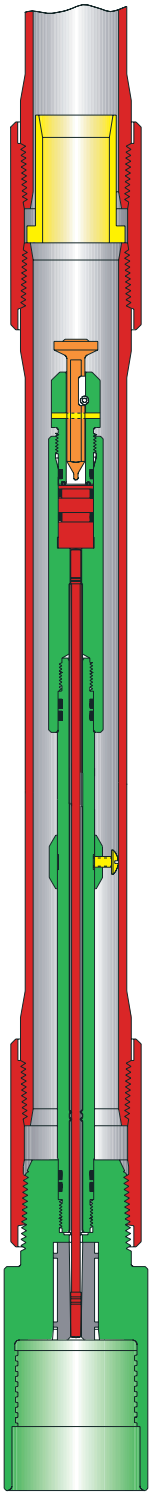

Mechanical Firing Head

Mechanical Firing Head

Thread Size and Type in. (mm)	1.90 (48.26) NU 10 Rd pin x 2 3/8 (60.33) 6P Acme box	2 3/8 (60.33) EUE 8 Rd pin x 2 7/8 (73.03) 6P Acme box	1 7/16 (36.51) 8 UN 2 B Box x 1.90 (48.26) NU 10 RD Pin
Assembly Number	100005228	100005223	100155741
Extreme Environment Kit	100156259	100156259	N/A
Redress Kit	N/A	N/A	100014388
Maximum OD in. (mm)	2.75 (69.85)	3.375 (85.73)	2.0 (50.8)
Minimum ID (No-Go) in. (mm)	1.56 (39.62)	1.56 (39.62)	1.53 (38.86)
Maximum Operating Pressure	20,000 (1380)	20,000 (1380)	20,000 (1380)
Minimum Operating Pressure psi (bars)	None	None	None
Flow Area	N/A	N/A	N/A
Temperature Rating	Determined by explosives	Determined by explosives	Determined by explosives
Tensile Strength (FH body) lb (kg)	140,000 (63 400)	238,000 (107 900)	60,000 (27 200)
Burst Pressure psi (bars)	Determined by handling sub	Determined by handling sub	25,000 (1725)
Collapse Pressure psi (bars)	Determined by handling sub	Determined by handling sub	20,000 (1380)
Overall Length (w/o tubing sub) ft (m)	4.58 (1.40)	4.58 (1.40)	1.59 (0.48)

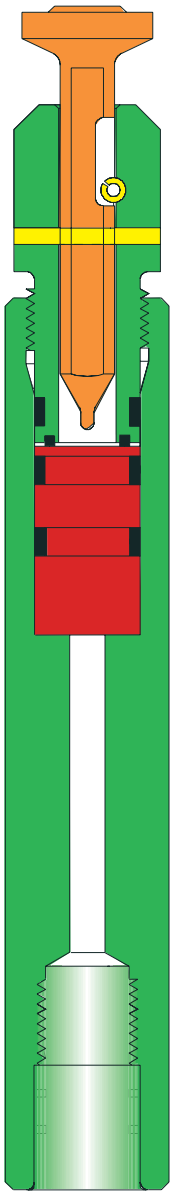

Mechanical Firing Head Sub-Assembly

Detonation Interruption Device

The Detonation Interruption Device (DID) provides additional safety for the VannGun™ System. This safety device contains an eutectic metal that protects the initiator from the firing pin at surface conditions. The eutectic metal has a very low melting point, but while it is in a solid state, the metal in the DID will stop the explosive train from being transmitted to the perforating assembly after the firing head has been detonated.

Operation

A minimum bottomhole temperature (BHT) of 135 °F is required to run the DID. Unless the DID is exposed to high surface temperatures, the eutectic metal will be solid when the assembly starts in the hole. When it is warmed to the BHT, the eutectic metal is liquified and allows the transfer of the explosive train from the firing head to the perforating assembly. If the guns are pulled out of the hole before they are fired, the eutectic metal will return to a solid state as it reaches the cooler temperatures near the surface. This device helps prevent accidental firing of the guns when they are started in the hole or pulled out.

Features and Benefits

- Is compatible with all firing heads
- Disables the perforating assembly at surface
- Can be used with redundant firing heads

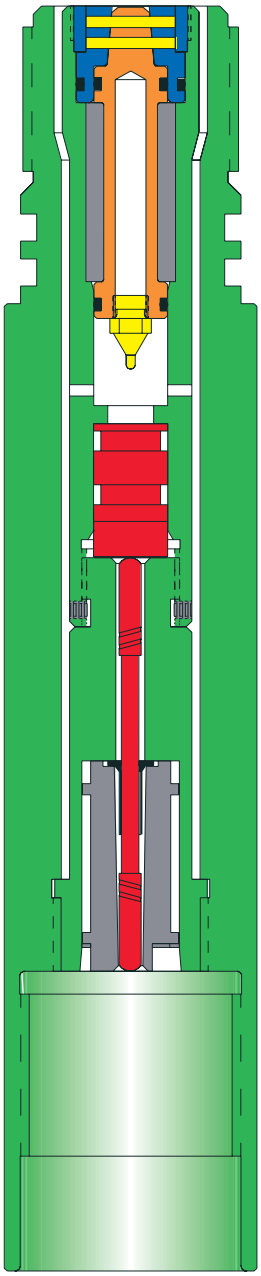

Detonation Interruption Device

Detonation Interruption Device

Thread Size and Type	2 3/8 (60.33)	2 7/8 (73.03)
in. (mm)	6 Rd box x pin	6 Rd box x pin
Housing Number	100156049	100014226
Assembly Number	100155744	100155744
Installation Tool	120040863	120040863
Maximum OD in. (mm)	2.75 (69.85)	3.375 (85.73)
Minimum ID	N/A	N/A
Maximum Operating Pressure psi (bars)	23,000 (1590)	25,000 (1725)
Minimum Operating Pressure	None	None
Flow Area	N/A	N/A
Minimum Required	135 (57)	135 (57)
Temperature Rating °F (°C)	Determined by explosive	135 (57)
Tensile Strength lb (kg)	140,000 (63 400)	246,000 (111 500)
Burst Pressure	N/A	N/A
Collapse Pressure psi (bars)	23,000 (1590)	25,000 (1725)
Overall Length ft (m)	1.15 (0.35)	1.17 (0.36)

These ratings are guidelines only. For more information, consult your local JRC representative.

Model II-D Mechanical Firing Head

The Model II-D Mechanical Firing Head is a pressure-assisted mechanical firing head. The detonating car strikes the firing pin, releasing the firing piston. Hydrostatic pressure then forces the firing piston into the initiator.

Operation

The Model II-D Firing Head requires a minimum of 1,500 psi hydrostatic pressure in the tubing to actuate the firing head properly. Adding more pressure to the tubing after the detonating bar has struck the firing pin will not actuate the firing head.

Features and Benefits

- Cannot be detonated accidentally at surface
- Is ideal for use in mud environments where spudding may be necessary
- Can be used in deviated wells

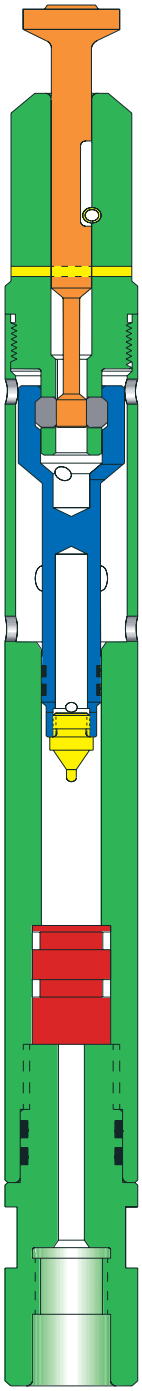

Model II-D Mechanical Firing Head

Model II-D Mechanical Firing Head

Thread Size and Type in. (mm)	1.90 (48.26) EUE	2 $^{3}/_{8}$ (60.33) EUE
	10 Rd pin x 2 $^{3}/_{8}$ (60.33)	8 RD pin x 2 $^{7}/_{8}$ (73.03)
	6P Acme box	6P Acme box
Assembly Number	1000014156	100005227
Maximum OD in. (mm)	2.75 (69.85)	3.375 (85.73)
Minimum ID (No-Go) in. (mm)	1.56 (39.62)	1.56 (39.62)
Maximum Operating Pressure psi (bars)	20,000 (1380)	20,000 (1380)
Minimum Operating Pressure psi (bars)	1,500 (103)	1,500 (103)
Temperature Rating	Determined by	Determined by
	explosives	explosives
Tensile Strength lb (kg)	140,000 (63 400)	238,000 (107 900)
Burst Pressure	Determined by	Determined
psi (bars)	handling sub	handling sub
Collapse Pressure	Determined by	Determined by
psi (bars)	handling sub	handling sub
Overall Length ft (m)	4.58 (1.4)	4.58 (1.4)

These ratings are guidelines only. For more information, consult your local JRC representative.

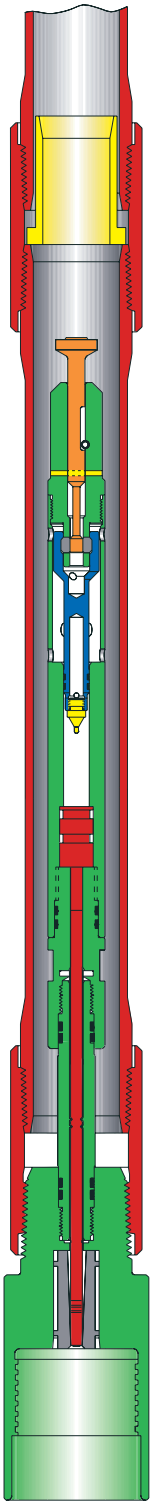

Model II-D Mechanical Firing Head Assembly

Model III-D Mechanical Firing Head

The Model III-D Mechanical Firing Head is a pressure-assisted mechanical firing head. The detonating bar strikes the firing pin, releasing the firing piston. Hydrostatic pressure then forces the firing piston into the initiator. The Model III-D Firing Head requires a minimal amount of hydrostatic pressure to actuate the firing head.

Operation

The Model III-D Firing Head requires a minimum of 250 psi hydrostatic pressure in the tubing to actuate the firing head properly. This minimal actuating pressure is ideal for applications that require maximum differential pressures. Adding more pressure to the tubing after the detonating bar has struck will not actuate the firing head.

Features and Benefits

- Cannot be detonated accidentally at surface
- Is ideal for use in mud environments where spudding may be necessary
- Can be used in deviated wells
- Requires minimal hydrostatic pressure to actuate the firing head

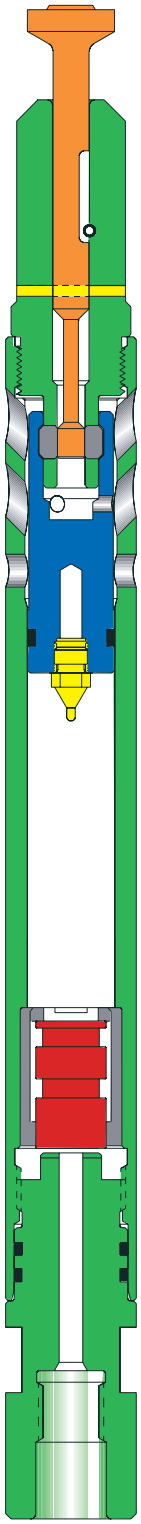

Model III-D Mechanical Firing Head

Model III-D Mechanical Firing Head

Thread Size and Type in. (mm)	1.90 (48.26) EUE	2 $^{3}/_{8}$ (60.33) EUE
	10 Rd pin x 2 $^{3}/_{8}$ (60.33)	8 Rd pin x 2 $^{7}/_{8}$ (73.03)
	6P Acme box	6P Acme box
Assembly Number	100155742	100005191
Maximum OD in. (mm)	2.75 (69.85)	3.375 (85.73)
Minimum ID (No-Go) in. (mm)	1.56 (39.62)	1.56 (39.62)
Maximum Operating Pressure psi (bars)	8,000 (550)	8,000 (550)
Minimum Operating Pressure psi (bars)	250 (17)	250 (17)
Temperature Rating	Determined by	Determined by
	explosives	explosives
Tensile Strength lb (kg)	140,000 (63 400)	238,000 (107 900)
Burst Pressure	Determined by	Determined by
psi (bars)	handling sub	handling sub
Collapse Pressure	Determined by	Determined by
psi (bars)	handling sub	handling sub
Overall Length ft (m)	4.58 (1.4)	4.58 (1.4)

These ratings are guidelines only. For more information, consult your local JRC representative.

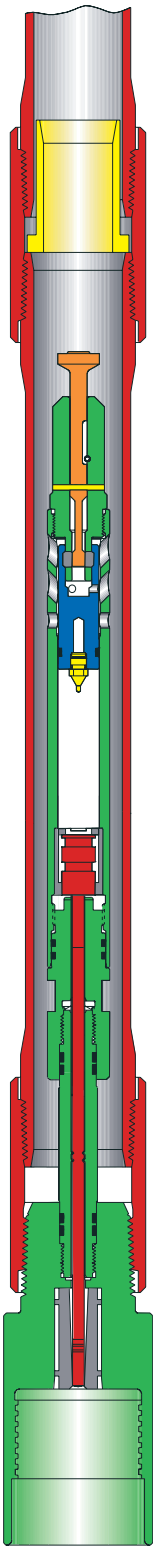

Model III-D Firing Head Assembly

Pressure-Actuated Firing Head

The 1 11/16-in. Pressure-Actuated Firing Head (PAF) can run with small OD tubing or coiled tubing to detonate small OD perforating guns. The PAF is detonated by pressure applied to the tubing string.

Operation

The 1 11/16-in. PAF consists of an upper housing with circulating ports, a firing piston that is shear-pinned in place across the circulating ports, and an initiator contained in a lower housing. Pressure applied to the tubing string shears the shear set, which forces the firing piston into the initiator to detonate the explosive component attached to the PAF. The downward movement of the firing piston opens the circulating ports.

Features and Benefits

- Can be run on the top and bottom of the gun assembly
- Initiates a bridge-plug and setting tool
- Initiates tubing cutters
- Detonates tubing punch charges for squeeze or circulating jobs
- Can be run to remain closed after detonation
- Can be modified to be run as a slickline retrievable firing head and a Time-Delay Firing Head

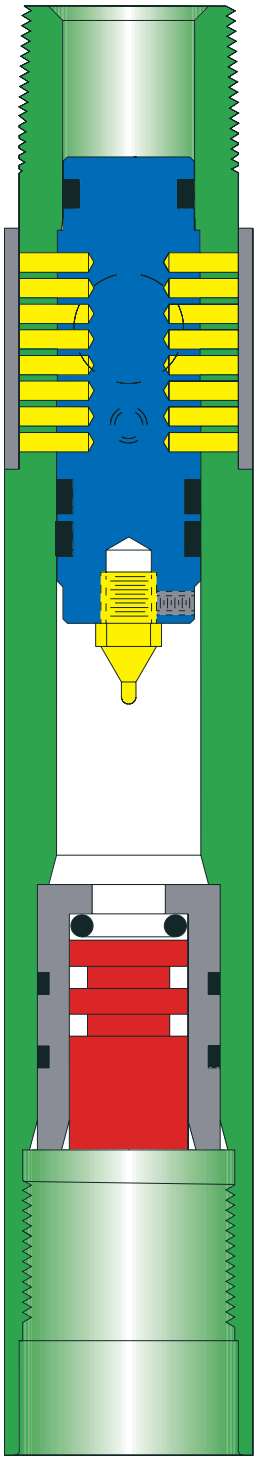

Pressure-Actuated Firing Head

Pressure-Actuated Firing Head

Thread Size and Type	1.315 (33.40) NU-10 Rd pin x 1 7/16 (36.51) 8 UN-2B Box
in. (mm)	
Assembly Number	100005224
Maximum OD	1.688 (42.88)
in. (mm)	
Minimum ID	N/A
in. (mm)	
Maximum Operating Pressure	17,000 (1170)
psi (bars)	
Minimum Operating Pressure	2,200 (150)
psi (bars)	
Flow Area of Ports	0.44 (2.84)
in.^{2} (cm^2)	
Number and ID of Ports	2 @ 0.75 (19.05)
in.^{2} (cm^2)	
Temperature Rating	Det. by Explosive
^{o}C (^{o}F)	
Tensile Strength	65,000 (29,400)
lb (kg)	
Burst Pressure	N/A
psi (bars)	
Collapse Pressure	27,000 (1,860)
psi (bars)	
Overall Length	0.82 (0.25)
ft (m)	

These ratings are guidelines only. For more information, consult your local JRC representative.

Model K Series Firing Head

The Model K Series Firing Head was developed for conditions that are unfavorable for dropping a detonating bar in a horizontal well. The Model K Firing Head is a pressure-sensitive tool designed to hydraulically detonate at a prescribed pressure. These firing heads use tubing pressure applied to a piston-type firing pin.

Operation

The Model K Series Firing Head is designed to provide a reliable and cost-effective method for firing guns using hydrostatic pressure. Each firing head contains a firing piston that is shear-pinned in place above and initiator. The number of shear pins used varies for each well situation. When enough hydrostatic pressure is applied to the piston, the shear pins shear, thereby allowing the firing pin on the lower end of the piston to be driven into the initiator. This action detonates the guns. These firing heads do not have a built-in delay.

Features and Benefits

- Allow the operator to determine the exact time of firing the guns since the firing heads require a predetermined pressure before the guns can fire
- Work with full-opening or nonfull-opening downhole tools
- Are ideal for balanced or overbalanced perforating
- Can be used for dual completions, drillstem testing, or production perforating
- Are well-suited for highly deviated well completions
- Can be run on the top or bottom of the perforating assembly
- Can be easily redressed

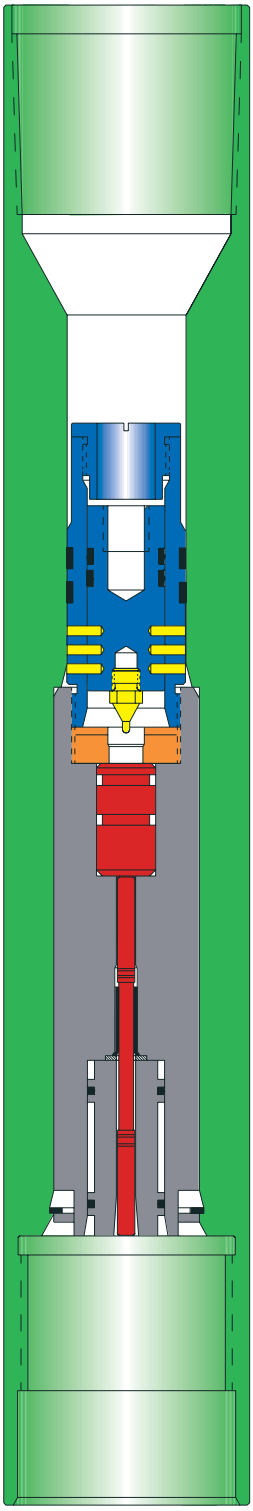

Model K Series Firing Head

Model K Series Firing Head

	Model K Firing Heads	Model K-II Firing Heads	
Thread Size	2 $^{7}/_{8}$ (73.03) EUE 8 Rd	1.9 (48.26) EUE 10 Rd	2 $^{7}/_{8}$ (73.03) EUE 8 Rd
and Type	box x 2 $^{7}/_{8}$ (73.03)	pin x 2 $^{3}/_{8}$ (60.33)	box x 2 $^{7}/_{8}$ (73.03)
in. (mm)	6P Acme box	Acme box	6P Acme box
Assembly Number	100014211	100005190	100014215
Maximum OD in. (mm)	3.375 (85.73)	2.75 (69.85)	3.375 (85.73)
Minimum ID	N/A	N/A	N/A
Maximum Operating Pressure psi (bars)	13,000 (895)	19,500 (1345)	19,500 (1345)
Minimum Operating Pressure psi (bars)	4,000 (275)	4,000 (275)	4,000 (275)
Flow Area	N/A	N/A	N/A
Temperature Rating	Determined by explosives	Determined by explosives	Determined by explosives
Tensile Strength lb (kg)	220,000 (99 700)	187,000 (84 800)	220,000 (99 700)
Burst Pressure psi (bars)	N/A	N/A	N/A
Collapse Pressure psi (bars)	30,000 (2070)	25,000 (1725)	30,000 (2070)
Overall Length ft (m)	1.25 (0.38)	1.43 (0.44)	1.64 (0.50)

These ratings are guidelines only. For more information, consult your local JRC representative.

Model KV-II Series Firing Head

The KV-type firing head design combines a firing head with a vent assembly. The KV-II Firing Head makes the firing of the guns and the opening for the vent one operation rather than two. This tool allows the operator more accurate control of when the vent opens in relation to when the guns fire.

Operation

In many tubing-conveyed perforating (TCP) applications, it is either desirable or necessary to keep the tubing closed until the guns have been detonated. In the past, the tubing was kept closed by a firing head with some type of vent assembly. Coordination between the two tools was sometimes hard to achieve, and the vent often opened either too soon or too late. The KV-II Firing Head combines a firing head and a vent assembly. A piston is sheared to cause the guns to detonate and the ports to open and equalize (or vent) pressure. This venting feature allows operators to run the tubing in the hole dry if needed. In the standard KV-II Firing Head, the ports open the instant the firing head is actuated and the guns detonate. To delay the gun detonation, one or more devices may be added to the assembly.

Features and Benefits

- Useful in wells with open perforations where it is not possible to pressure up on the wellbore to actuate a firing head
- Useful in perforating and stimulation jobs where the tubing pressure exceeds the limitations of the casing
- Useful because the firing head and vent operate at one pressure
- Ideal for deviated wells
- Piston-mechanically locked after firing

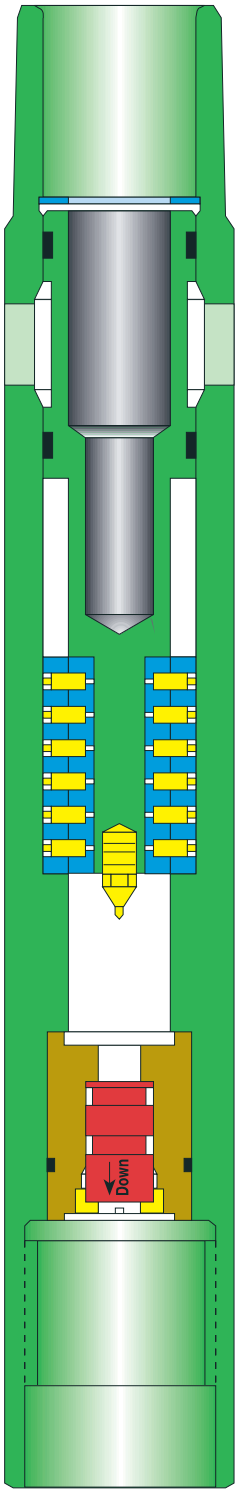

Model KV-II Series Firing Head

Model KV-II Series Firing Head

Thread Size and Type in. (mm)	2 3/8 (60.33) EUE	2 7/8 (72.88) EUE
	8 Rd pin	8 Rd pin x 2 7/8
	or 6P Acme box	6P Acme box
Assembly Number	100014153	100014155
Maximum OD in. (mm)	2.75 (69.85)	3.375 (85.85)
Minimum ID	N/A	N/A
Maximum Operating Pressure psi (bars)	25,000 (1725)	25,000 (1725)
Minimum Operating Pressure psi (bars)	3,000 (275)	4,000 (275)
Flow Area in.² (cm²)	2.79 (18.0)	3.14 (20.27)
Temperature Rating	Determined by explosives	Determined by explosives
Tensile Strength lb. (kg)	145,000 (65 700)	235,000 (106 600)
Maximum Differential Pressure psi (bars)	15,000 (1035)	15,000 (1035)
Overall Length ft (m)	1.53 (0.47)	1.66 (0.51)
Minimum Makeup Length ft (m)	1.36 (0.42)	1.49 (0.45)

These ratings are guidelines only. For more information, consult your local JRC representative.

Time-Delay Firer

The Time-Delay Firer (TDF) allows under or overbalanced perforating through the use of a pressure-actuated firing head with a time-delay fuse. The delay fuse allows five to seven minutes for adjusting the actuating pressure in the tubing to achieve the desired pressure before firing the guns.

Operation

The TDF is run with a predetermined number of shear pins for specific well conditions. The tubing is pressured to the maximum actuating pressure slowly. The maximum pressure shears the pins in the shear set and forces the firing piston into the primer. The primer ignites the pyrotechnic delay fuse. The delay fuse burns for a predetermined time, between five and seven minutes, depending on the bottomhole temperature and then the perforating assembly.

Features and Benefits

- Allows independent perforating of selected zones
- Allows maximum use of under or overbalanced pressure
- Can be run in heavy mud systems
- Can be used with full-opening or nonfull-opening tools
- Reduces cost by allowing the running of multiple guns without gun spacers
- Is ideal for production completions, drillstem testing, and dual completions
- Is recommended for running on the top and bottom of gun assemblies
- Allows additional time-delay elements as needed for increasing delay time

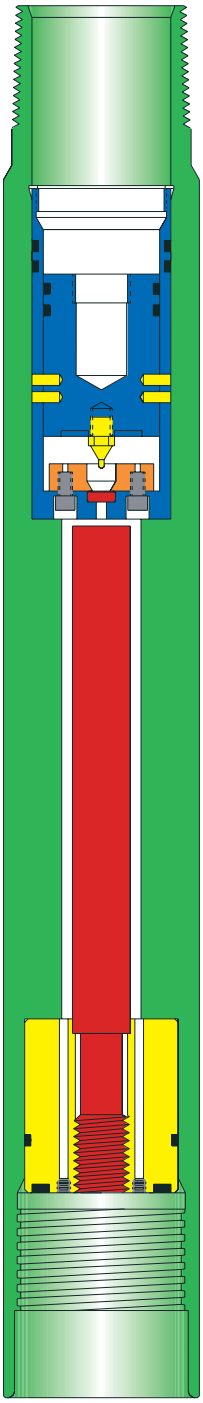

Time-Delay Firer

Time-Delay Firer

Thread Size and Type in. (mm)	1 $^{7}/_{16}$ (36.51)	1.90 (48.26) EUE	2 $^{7}/_{8}$ (73.03) EUE
	8 UN-2B box x 1.315 (33.4)	10 Rd pin x 2 (50.8)	8 Rd pin x 2 $^{7}/_{8}$ (73.03)
	NU-10 Rd pin	6P Acme box	6P Acme box
Assembly Number	100014157	100005231	100005230
Maximum OD in. (mm)	1.688 (42.88)	2.50 (63.5)	3.375 (85.73)
Minimum ID	N/A	N/A	N/A
Maximum Operating Pressure psi (bars)	17,000 (1170)	24,000 (1655)	13,000 (895)
Minimum Operating Pressure	2,200 (150)	4,000 (275)	4,000 (275)
Flow Area in.² (cm²)	0.64 (4.13)	N/A	N/A
Temperature Rating	425 (218) for 100	415 (213) for 100	415 (213) for 100
°F (°C)	hours	hours	hours
Tensile Strength lb (kg)	56,000 (25 400)	160,000 (72 500)	220,000 (99 700)
Burst Pressure psi (bars)	N/A	N/A	N/A
Collapse Pressure psi (bars)	20,000 (1380)	30,000 (2070)	30,000 (2070)
Overall Length ft (m)	2.25 (0.69)	1.89 (0.58)	2.0 (0.61)

These ratings are guidelines only. For more information, consult your local JRC representative.

Extended Delay and Modular Delay Fuses

A delay fuse is an explosive device with a slow-burning fuse. Extended and modular delay fuses add time between the actuation of the firing head and the actual detonation of the guns. Each delay fuse lasts for seven minutes at 70 °F.

Operation

The extended delay assemblies contain one delay fuse and can be run with any other firing assembly. They are installed between the firing head and the guns. The modular delays are assembled with the firing head in one housing and become an integral part of the firing system. The modular delays are used primarily with the multi-action delay firing head, the 1 11/16 in. TDF firing head and the slickline-retrievable TDF firing head.

Features and Benefits

- Increase delay time when nitrogen is used to actuate the firing head to give additional time to bleed the nitrogen pressure down to the desired level
- Allow time for necessary actions to take place downhole, such as increasing pressure to open a pressure-actuated vent assembly

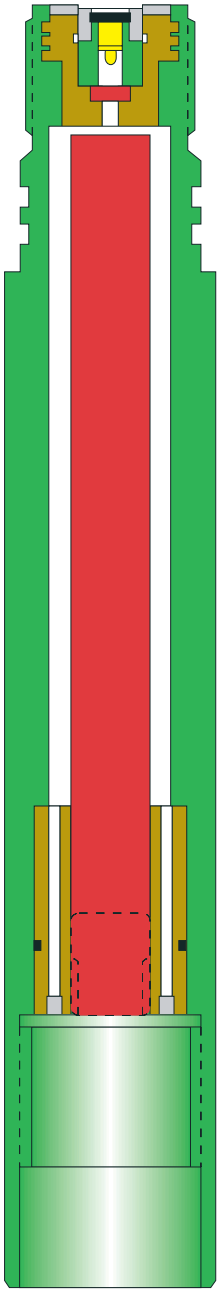

Extended Delay and Modular Delay Fuses

Extended Delay and Modular Delay Fuses

Thread Size and Type	2 (50.8) 6P Acme	2 7/8 (73.03) 6P
in. (mm)	box x pin	Acme box x pin
Assembly Number	100005229	100009426
Maximum OD in. (mm)	2.5 (62.5)	3.375 (85.85)
Minimum ID	N/A	N/A
Maximum Operating Pressure psi (bars)	25,000 (1725)	25,000 (1725)
Minimum Operating Pressure	N/A	N/A
Flow Area	N/A	N/A
Temperature Rating	415 (213) for	415 (213) for
Delay Fuse°F (°C)	100 hours	100 hours
Tensile Strength lb (kg)	197,000 (89 300)	270,000 (122 400)
Burst Pressure	N/A	N/A
Collapse Pressure psi (bars)	30,000 (2070)	30,000 (2070)
Overall Length ft (m)	1.39 (0.42)	1.39 (0.42)
Makeup Length ft (m)	1.10 (0.34)	1.10 (0.34)

These ratings are guidelines only. For more information, consult your local JRC representative.

Hydraulic-Actuator Firing Head

The Hydraulic-Actuator Firing (HAF) Head is a pressure-balanced tool that automatically fills the tubing string while it is running in the well. A stainless steel ball is dropped from the surface or circulated into position. Pressure applied to the tubing string actuates the HAF.

Operation

A stainless steel ball is dropped from the surface or is circulated downhole into the hammer piston. Pressure applied to the tubing string shears the retaining pins and forces the hammer piston into the firing pin. The firing pin detonates the initiator, which sta1rts the detonation of the perforating assembly. Circulation is regained as soon as the firing pin has been sheared.

Features and Benefits

- Allows packerless completions
- Makes actuation easily observable
- Is useful in coiled tubing-conveyed completions, deviated wells, and through-tubing perforation
- Is reusable
- The smaller tool has a swivel incorporated into the firing head assembly
- The smaller tool has a swivel incorporated into the firing head assembly

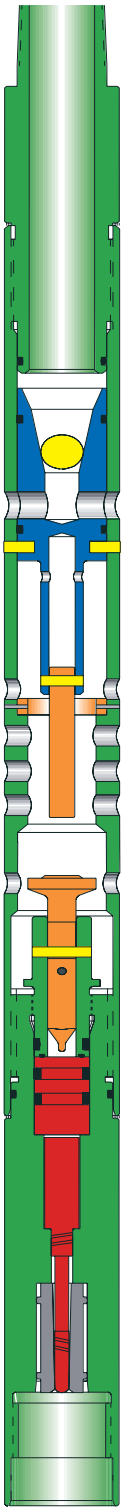

Hydraulic-Actuator Firing Head

Hydraulic-Actuator Firing Head

Thread Size and Type in. (mm)	1.315 (33.40) NU-10Rd pin x 1 $^{7}/_{16}$ (36.51) 8UN-2B box	1.315 (33.40) NU-10Rd pin x 1 $^{7}/_{16}$ (36.51) 8UN-2B box	2 $^{3}/_{8}$ (60.33) EUE 8 Rd pin x 2 $^{7}/_{8}$ (73.03) 6p Acme box
Assembly Number	100156011*	100156025	100156150
Maximum OD in. (mm)	1.688 (42.88)	1.688 (42.88)	3.38 (85.85)
Minimum ID in. (mm)	N/A	N/A	N/A
Maximum Operating Pressure psi (bars)	20,000 (1380)	20,000 (1380)	20,000 (1380)
Minimum Operating Pressure psi (bars)	N/A	N/A	N/A
Flow Area of Ports in.² (cm²)	0.39 (2.52)	0.39 (2.52)	3.14 (20.26)
Number and ID of Ports in. (mm)	2 @ 0.5 (12.70)	2 @ 0.5 (12.70)	4 @ 1.0 (25.40)
Temperature Rating °F (°C)	Determined by explosives	Determined by explosives	Determined by explosives
Tensile Strength lb (kg)	50,000 (22 600)	50,000 (22 600)	210,000 (95 200)
Burst Pressure psi (bars)	29,000 (2000)	29,000 (2000)	27,000 (1860)
Collapse Pressure psi (bars)	40,000 (2760)	40,000 (2760)	25,000 (1725)
Overall Length ft (m)	2.94 (0.90)	2.27 (0.69)	2.57 (0.78)
Ball OD in. (mm)	0.625 (15.875)	0.625 (15.875)	1.375 (34.925)

These ratings are guidelines only. For more information, consult your local JRC representative.

The VannJet is developed to actuate the firing head in extremely high-temperature situations and for other applications where it is not desirable to run the firing head attached to the perforating assembly.

Operation

The VannJet firing head is run with the VannJet stinger. After the firing head is located on the top of the stringer, the slickline operator jars down to shear the brass retaining screws. When the retaining screws are sheared, the firing piston retaining dogs retract. The hydrostatic pressure then forces the firing piston into the initiator to detonate a shaped charge in the lower section of the VannJet. The explosives in the stinger are then detonated, and the explosive train continues to the VannGun™ assembly.

Features and Benefits

- Has an initiator that is exposed to high temperature in the well for only a short time
- Incorporates a firing head that is not on the VannGun™ assembly
- Offers a high degree of safety in high-temperature operations
- Is designed to be run on a slickline
- Is actuated mechanically by jarring with wireline

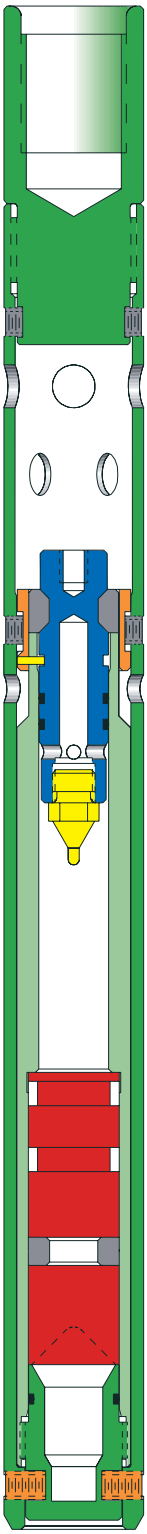

VannJet Model II

VannJet Model II

Thread Size and Type	1 $^{5}/_{16}$ (23.81)
in. (mm)	10 UNS-2B box
Assembly Number	120079662
Maximum OD	1.25 (31.75)
in. (mm)	
Minimum ID	N/A
Maximum Operating	20,000 (1380)
Pressure	
psi (bars)	
Minimum Operating	1,250 (86)
Pressure	
psi (bars)	
Flow Area of Ports	N/A
in.² (cm²)	
Temperature Rating	437 (225) for 200 hr
°F (°C)	
Tensile Strength	25,000 (11 300)
lb (kg)	
Burst Pressure	N/A
psi (bars)	
Collapse Pressure	21,000 (1 450)
psi (bars)	
Overall Length	1.13 (0.34)
ft (m)	

These ratings are guidelines only. For more information, consult your local JRC representative.

Slickline-Retrievable TDF Firing Head

The Slickline-Retrievable Time-Delay Firer (TDF) Firing Head is a combination of two assemblies: the slickline-retrievable firing head and a 1 11/16 in. TDF firing head. It is a pressure-actuated firing head with a built-in pyrotechnic time-delay assembly.

Operation

This firing head does not have to be run until after all pressure testing has been done and the heavy fluids have been displaced, which allows a reduced actuating pressure for the firing head. This assembly allows the operator to run guns in the hole on the end of tubing without a firing head. This assembly can be run in on slickline and attached to the firing head after the tubing is in the hole. It can also be retrieved on slickline.

Features and Benefits

- Allows the guns to be run in the hole without any type of firing mechanism installed
- Allows the retrieval and reinstallation of a malfunctioning firing head without pulling the guns
- Allows greatly reduced actuating pressures of the firing head because the firing head does not have to be in place when the guns are run

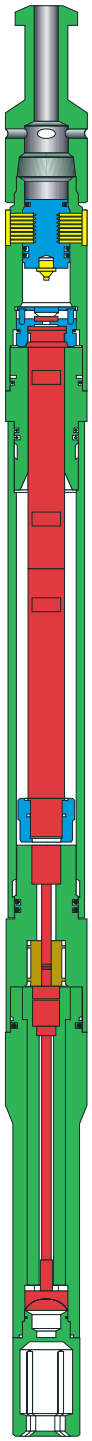

Slickline-Retrievable TDF Firing Head

Slickline-Retrievable TDF Firing Head

Thread Size and Type	N/A
Assembly Numbers	100155739 Firing Head 100014157 TDF 100155952 Slickline - Retrievable Stinger
Maximum OD in. (mm)	1.688 (42.88)
Minimum ID	N/A
Maximum Actuating Pressure psi (bars)	17,000 (1170)
Minimum Operating Pressure psi (bars)	2,200 (150)
Flow Area	N/A
Temperature Rating	Determined by explosives
Tensile Strength	N/A
Burst Pressure	N/A
Collapse Pressure psi (bars)	23,000 (1590)
Overall Length (1 delay fuse) ft (m)	3.83 (1.17)
Additional Fuses Length (each) ft (m)	0.87 (0.27)

These ratings are guidelines only. For more information, consult your local JRC representative.

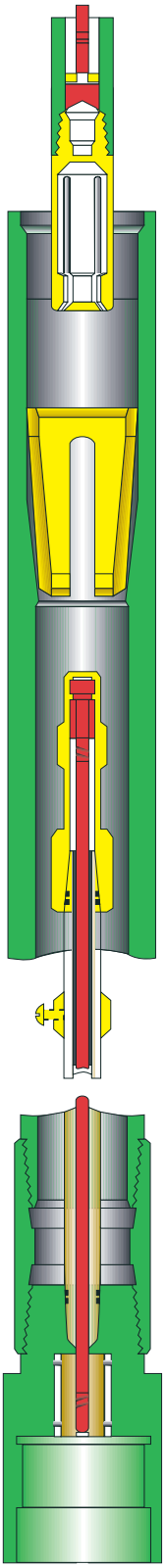

Slickline-Retrievable TDF Firing Head Assembly

Mechanical Tubing Release

The Mechanical Tubing Release (MTR) provides operators with the option of keeping or releasing the VannGun™ assembly from the tubing string. The MTR is usually run above the firing head and below the production ports below the packer. A standard shifting tool is used to operate the release mechanism in the MTR.

Operation

The MTR consists of three main components: the upper housing, a lower finger release sub, and a latch. The latch retains the finger release sub in the housing. To operate the MTR the user must:

1. Select the proper shifting tool and run it into the hole on slickline through the MTR.
2. Pick back up to engage the latch and lightly jar the latch four or five times.
3. Go back down to verify the release of the VannGun assembly.

Features and Benefits

- Frees the tubing for other tools and operations such as logging, production testing, and treating
- Provides a low-cost way to release the gun assembly
- Uses standard off-the-shelf shifting tools
- Does not have a time limit on dropping the gun assembly
- Leaves perforations uncovered to eliminate flow restrictions

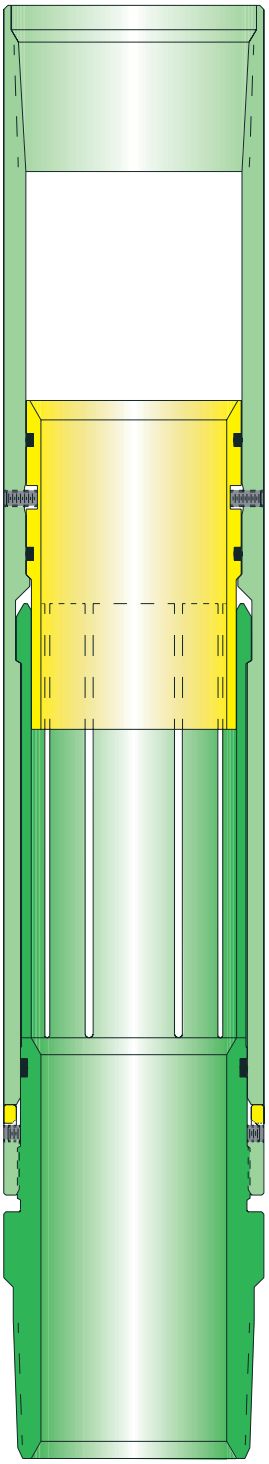

Mechanical Tubing Release

Mechanical Tubing Release

Thread Size and Type in. (mm)	2 3/8 (60.33) EUE 8 Rd box x pin	2 7/8 (73.03) EUE 8 Rd box x pin	3 1/2 (88.9) EUE 8 Rd box x pin
Assembly Number (without latch)	100005286	100005281	100005284
Maximum OD in. (mm)	3.06 (77.22)	3.38 (85.85)	3.95 (100.33)
Minimum ID (latch size) in. (mm)	1.50 (38.10) 1.63 (41.40) 1.81 (45.97) 1.88 (47.75)	1.88 (47.75) 2.125 (53.975) 2.25 (57.15)	2.25 (57.15) 2.75 (69.85)
Tensile Strength lb (kg)	120,000 (54 400)	120,000 (54 400)	120,000 (54 400)
Burst Pressure psi (bars)	12,000 (825)	12,000 (825)	11,000 (760)
Collapse Pressure psi (bars)	10,000 (690)	11,000 (760)	10,000 (690)

MTR Shifting Tool and Key Numbers

Latch Size in. (mm)	Tool Number	Key Number	Key Maximum Exp. OD in. (mm)	Minimum in. (mm)
1.50 (38.10)	42 B 0120	42 B 108	1.626 (42.275)	1.49 (37.85)
		42 B 443	1.70 (43.18)	1.422 (36.119)
1.625 (41.275)	42 B 0121	42 B 80	1.890 (48.006)	1.593 (40.462)
1.81 (45.97)	42 B 0117	42 B 37	2.078 (52.781)	1.75 (44.45)
	42 B 0237	42 B 681	2.12 (53.85)	1.69 (42.93)
1.88 (47.75)	42 B 0116	42 B 153	2.109 (53.569)	1.84 (46.74)
	42 B 0117	42 B 37	2.078 (52.781)	1.750 (44.45)
	42 B 0237	42 B 681	2.12 (53.85)	1.69 (42.93)
2.25 (57.15)	42 B 0118	42 B 287	2.593 (65.862)	2.156 (54.762)
		42 B 46		
2.125 (53.975)	42 B 0159	42 B 387	2.44 (61.98)	1.97 (50.04)
2.75 (69.85)	42 B 0147	42 B 348	2.952 (74.981)	2.718 (69.037)

MTR Latch Part Numbers

Thread Size and Type	2 3/8 (60.33) EUE	2 7/8 (73.03) EUE	3 1/2 (88.9) EUE
in. (mm)	8Rd	8Rd	8Rd
Assembly Number	100005286	100005281	100005284
Latch ID Size in. (mm) Part Number	1.50 (38.10) 993.20545	1.880 (47.75) 993.20406	2.25 (57.15) 993.20422
	1.63 (41.40) 993.20546	2.125 (53.975) 993.20404	2.75 (69.85) 993.20421
	1.81 (45.97) 993.20547	2.250 (57.15) 993.20401	
	1.88 (47.75) 993.20543		

These ratings are guidelines only. For more information, consult your local JRC representative.
*Latch must be ordered separately.

Multiaction-Delay Firing Head

The Multiaction-Delay Firing Head is a pressure-actuated redundant firing system that can be run with any one of several other firing heads.

Operation

One side of the multiaction firing head will always be pressure-actuated. The other side of the firing head may be a bar drop-type head or another pressure-actuated firing head. Either side of the firing head may be used as the primary or backup firing system.

Features and Benefits

- Allows the use of a redundant firing head without having a firing head on the bottom of the gun string
- Allows multiple redundancy when a multiaction firing head is placed on both the top and bottom of the gun string
- Allows operators to postpone the decision of whether to use the bar drop or pressure side of the firing head as the primary firing mechanism
- Allows use of additional delay elements

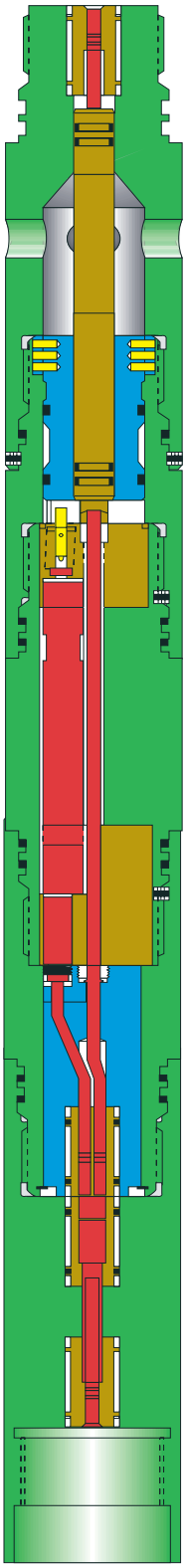

Multiaction-Delay Firing Head

Multiaction-Delay Firing Head

Thread Size and Type	2 3/8 (60.33)	2 7/8 (73.03)
in. (mm)	6P Acme box x pin	6P Acme box x pin
Assembly Number	100155753	100155750
Extreme Environment Kit	101206535	101206534
Redress Kit	100157222	100157221
Maximum OD in. (mm)	3.10 (78.74)	3.375 (85.85)
Minimum ID	N/A	N/A
Maximum Operating Pressure psi (bars)	18,000 (1240)	25,000 (1725)
Minimum Operating Pressure psi (bars)	4,000 (275)	4,000 (275)
Temperature Rating	Determined by explosives	Determined by explosives
Tensile Strength lb (kg)	170,000 (77 100)	201,000 (91 100)
Burst Pressure	N/A	N/A
Collapse Pressure psi (bars)	22,000 (1515)	29,000 (2000)
Overall Length ft (m)	3.68 (1.12)	3.68 (1.12)
Makeup Length	3.41 (1.04)	3.41 (1.04)

These ratings are guidelines only. For more information, consult your local JRC representative.

Differential Firing Head

The Differential Firing Head (DFH) was designed to allow underbalanced perforating with a differential pressure-actuated firing system. The DFH works by requiring the internal pressure to be greater than the external pressure. This condition can be created when pressure is applied to the ID or when the OD pressure is reduced. The pressure required to actuate the DFH may be lower than that used for other pressure-operated firing heads because it is operated by differential pressure.

Operation

The DFH is actuated after a predetermined differential pressure is created in the firing head ID. This differential pressure can be created when surface pressure is applied to the tubing or by reducing the hydrostatic pressure to the annulus. When the predetermined differential pressure is reached, the shear pins holding the dog retainer piston will shear, allowing the dog retainer to move up. The upward movement releases the dogs holding the firing piston in place, and the internal pressure drives the firing piston into the initiator or primer.

Features and Benefits

- Allows underbalanced perforating in horizontal wells without a packer
- Is ideal for perforating with a sucker rod or submersible pump in place
- Offers added safety because it is pressure-balanced when being run into the well
- Allows maximum underbalanced pressure in low-pressure wells when mechanical firing is not desirable
- Can be used when equipment or well conditions will not permit the use of high pressures
- Allows the use of time-delay elements as needed

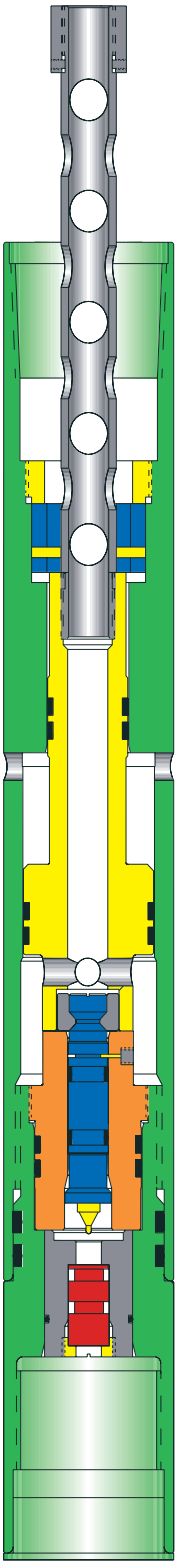

Differential Firing Head

Differential Firing Head

Thread Size and Type in. (mm)	2 $^{3}/_{8}$ (60.33) EUE	2 $^{7}/_{8}$ (73.03) EUE
	8 Rd box x 2 $^{3}/_{8}$ (60.33)	8 Rd box x 2 $^{7}/_{8}$
	6P Acme box	6P Acme box
Assembly Number	120002262	100014232
Extreme Environment Kit	993.141	993.141
Redress Kit	120022208	100157024
Maximum OD in. (mm)	3.0 (76.20)	3.38 (85.85)
Minimum ID	N/A	N/A
Maximum Operating Pressure (differential) psi (bars)	10,000 (690)	5,000 (345)
Minimum Operating Pressure (differential) psi (bars)	1,000 (69)	1,000 (69)
Flow Area	N/A	N/A
Temperature Rating	Determined by	Determined by
	explosives or O-rings	explosives or O-rings
Tensile Strength lb (kg)	130,000 (58 900)	220,000 (99 700)
Burst Pressure psi (bars)	20,000 (1380)	20,000 (1380)
Collapse Pressure psi (bars)	20,000 (1380)	20,000 (1380)
Overall Length ft (m)	1.94 (0.59)	1.98 (0.60)

These ratings are guidelines only. For more information, consult your local JRC representative.

Annulus-Pressure Firer-Control Line

The Annulus-Pressure Firer-Control Line (APF-C) was developed as a dual-firing system that allows the perforating guns to be detonated by annular pressure, a drop bar, or tubing pressure. The APF-C system consists of a pressure transfer reservoir, a sleeve through the packer mandrel, an adapter below the packer, and a control line to transmit pressure from the annulus above the packer to the APF-C firing head assembly on top of the guns. Any of the mechanical pressure-firing heads can be attached to the top of the APF-C firing head.

Operation

The APF-C system depends on the transfer of annular pressure through the packer down to the APF-C firing head. This pressure creates a differential pressure across the mandrel where the firing piston is housed. When the predetermined differential pressure is reached, the pins shear and the mandrel moves up and releases the firing piston, which is driven down by rathole pressure. The piston strikes the firing pin to set off the initiator. The operation of the drop bar or pressure-actuated firing head depends on which firing head system is used.

Features and Benefits

- Can be used with nonfull-opening test tools and partially-filled tubing strings
- Can be used for drillstem testing or shoot-and-pull for gravel packs
- Can be used wherever a pressure-actuated tool is desirable
- Is ideal for deviated wells
- Provides a system of two firing heads on top of the guns
- Can be run with a mechanical or pressure-actuated firing head as a secondary firing mechanism
- Enhances safety because the annulus-operated portion is pressure-balanced before the packer is set and the tester valve is opened

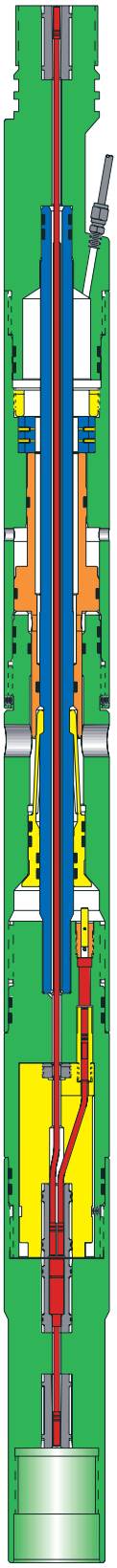

Annulus-Pressure Firer-Control Line

Annulus-Pressure Firer-Control Line

Thread Size and Type	2 $^{7}/_{8}$ (73.03)
in. (mm)	6P Acme box x pin
Assembly Number	100156138
Extreme Environment Kit	101016455
Redress Kit	100157210
Maximum OD	3.68 (93.47)
in. (mm)	
Minimum ID	N/A
in. (mm)	
Maximum	20,000 (1380)
Operating Pressure	
psi (bars)	
Minimum Operating	250 (17)
Pressure	
psi (bars)	
Temperature Rating	Determined by explosives
°F (°C)	or O-rings
Tensile Strength	174,000 (78 900)
Burst Pressure	N/A
Collapse Pressure	17,000 (1170)
psi (bars)	
Minimum	4.0 (1.22)

These ratings are guidelines only. For more information, consult your local JRC representative.

Annulus-Pressure Transfer Reservoir

The Annulus-Pressure Transfer Reservoir (APTR) is an integral component of the Annulus-Pressure Firer-Control line (APF-C). The APTR is the mechanism that transmits pressure from above the packer to a differential pressure or pressure-actuated firing head on top of the perforating assembly.

Operation

The APTR transmits annulus pressure into a microannulus created by the packer mandrel and the APTR mandrel. The pressure is ported to a control line sub on the lower end of the packer. A stainless steel control line connects the APTR to the pressure-responsive firing head on the perforating assembly.

Features and Benefits

- Features a full-opening ID
- Is compatible with mud environments
- Is adapted for RTTS and CHAMP® packers
- Is ideal for applications that require a partial fluid column in the tubing string
- Eliminates the need for nitrogen

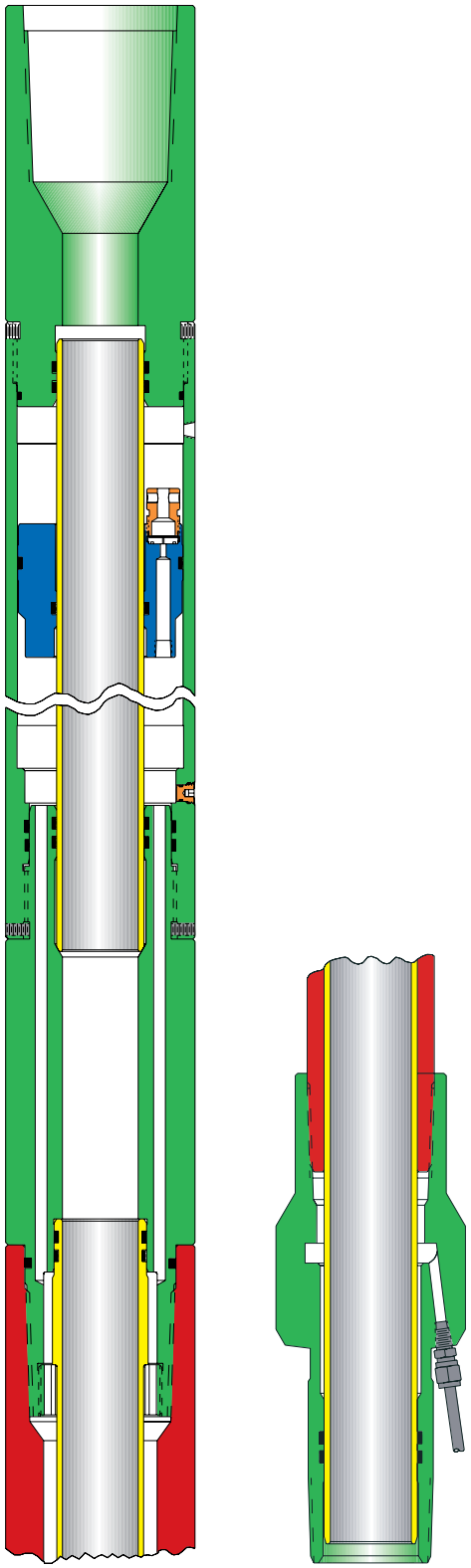

Annulus-Pressure Transfer Reservoir

Annulus-Pressure Transfer Reservoir

Top Connection	3 1/2 (88.90) 4 IF box x (98.43) 6 Stub Acme pin	4 1/2 (114.3) 4 IF box x pin
Assembly Number	100156028	101016453
Redress Kit	100005372	100157196
Lower Connection	2 7/8 (73.03) EUE 8 Rd box x pin	4 1/2 (114.3) 4 IF box x 3 1/2 (88.90) EUE 8 Rd pin
Length Above Packer ft (m)	5.09 (1.55)	4.34 (1.32)
Length Below Packer ft (m)	1.02 (0.31)	1.33 (0.41)
Maximum OD in. (mm)	5.00 (127)	6.12 (155.45)
Minimum ID in. (mm)	2.00 (50.8)	2.37 (60.20)
Temperature Rating	Determined by O-rings	Determined by O-rings
Tensile Strength lb (kg)	328,000 (148 700)	587,000 (266 200)
Burst Pressure psi (bars)	18,000 (1240)	22,000 (1515)
Collapse Pressure psi (bars)	15,000 (1035)	19,000 (1310)

These ratings are guidelines only. For more information, consult your local JRC representative.

The Annulus-Pressure Firer-Control Vent (APF-C Vent) is a device that isolates the tubing from annulus fluid or pressure. The vent is actuated by rathole pressure after the perforating assembly has been detonated. It then provides a flowpath for the formation fluid into the tubing string.

Operation

The APF-C Vent is run directly on top of the APF-C Firing Head. When the perforating assembly is detonated, the rathole pressure shifts an actuating piston into a power piston. The shift opens the flow ports to the tubing.

Features and Benefits

- Is ideal for highly deviated or horizontal wells
- Requires minimal pressure to operate
- Eliminates nitrogen displacement or swabbing the tubing string to achieve desired underbalance

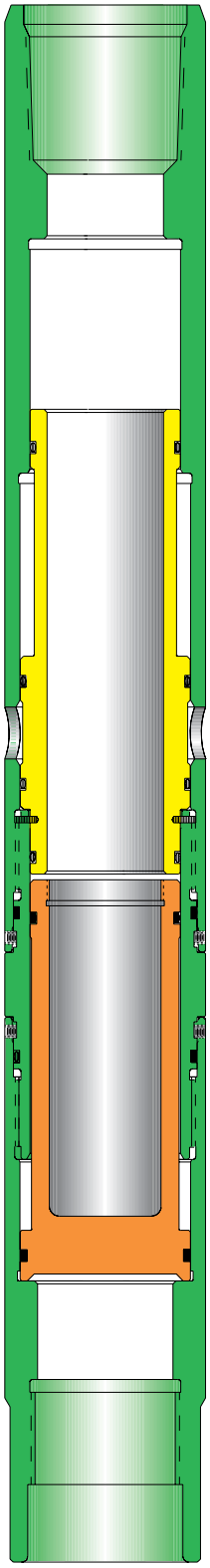

APF-C Vent

APF-C Vent

Thread Size and Type in. (mm)	2 $^{3}/_{8}$ (60.33) EUE 8 Rd box x 2 $^{7}/_{8}$ (73.03) 6P Acme box	2 $^{7}/_{8}$ (73.03) EUE 8 Rd box x 2 $^{7}/_{8}$ (73.03) 6P Acme box
Assembly Number	120038049	101016565
Redress Kit	100014384	100014382
Minimum ID in. (mm)	non full-bore	non full-bore
Maximum Operating Pressure psi (bars)	20,000 (1380)	20,000 (1380)
Minimum Operating Pressure psi (bars)	250 (17)	250 (17)
Flow Area in.² (cm²)	2.63 (16.97)	3.93 (25.34)
Number & ID of Ports	4 ports w/1-in. (25.4 mm) ID	5 ports w/1-in. (25.4 mm) ID
Temperature Rating °F (°C)	Determined by O-rings	Determined by O-rings
Tensile Strength lb (kg)	150,000 (68 000)	170,000 (77 000)
Burst Pressure psi (bars)	25,000 (1725)	25,000 (1725)
Collapse Pressure psi (bars)	22,000 (1515)	15,000 (1035)
Minimum Overall Length ft (m)	2.37 (0.72)	2.43 (0.74)

These ratings are guidelines only. For more information, consult your local JRC representative.

Pressure-Actuated Tubing Release

The Pressure-Actuated Tubing Release (PATR) is used to separate the guns from the tool string when mechanical or slicklike devices are not desirable. When separated, the guns drop off of the production tubing. Once the guns drop away, other tools and operations have no restrictions through the end of the tubing. In fact, the housing attached to the string has a greater ID than the tubing.

Operation

The PATR consists of four main components: an upper housing, lower finger release sub, inner sleeve, and retaining latch. The PATR is pressure-balanced until the standing valve is dropped into the inner sleeve. Tubing pressure is applied to shear the retaining pins in the latch. Once the latch has been shifted, the finger release sub with the sleeve releases from the housing and drops the perforating assembly into the rathole.

Features and Benefits

- Leaves the tubing string fully open
- Is ideal for use in remote areas where wireline is expensive or unfavorable
- Is ideal for situations where wireline can cause a safety hazard
- Provides access to the wellbore for production logging tools
- Is especially suited for releasing guns prior to stimulation treatments

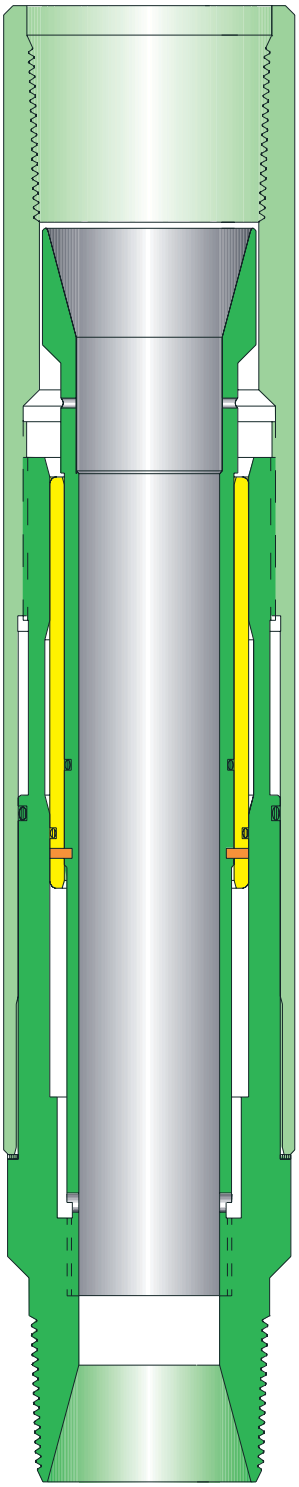

Pressure-Actuated Tubing Release

Pressure-Actuated Tubing Release

Thread Size and Type	2 3/8 (60.33) EUE	2 7/8 (73.03) EUE	3 1/2 (88.9) EUE
in. (mm)	8 Rd box x pin	8 Rd box x pin	8 Rd box x pin
Assembly Number	100156751	100156744	1010156385
Maximum OD in. (mm)	3.38 (85.85)	3.75 (95.25)	4.19 (106.43)
Minimum ID Before Release in. (mm)	1.63 (41.40)	1.812 (46.02)	1.812 (46.02)
Minimum ID After Release in. (mm)	2.31 (58.67)	2.828 (71.83)	3.5 (88.90)
Tensile Strength lb (kg)	90,000 (40 800)	120,000 (54 400)	130,000 (58 900)
Burst Pressure psi (bars)	10,000 (670)	10,000 (670)	10,000 (670)
Collapse Pressure psi (bars)	9,000 (620)	10,000 (670)	10,000 (670)
Standing Valve OD in. (mm)	1.76 (44.70)	1.86 (47.24)	1.86 (47.24)
Overall Length ft (m)	1.89 (0.58)	1.59 (0.48)	1.70 (0.52)

These ratings are guidelines only. For more information, consult your local JRC representative.

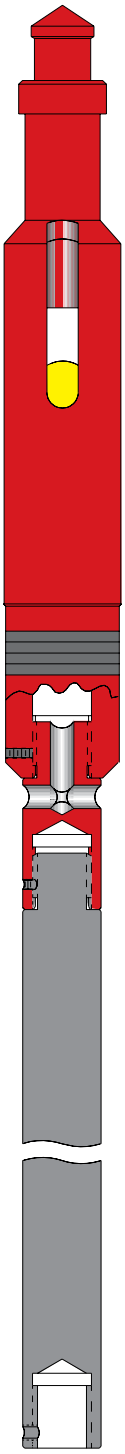

Pressure-Actuated Tubing Release

Automatic Release

The Automatic Release (AR) allows the perforating guns to drop immediately after firing.
Operation
The AR allows for dropping the perforating guns after they are fired. The guns may be fired either mechanically or by pressure. The releasing device is actuated by the pressure generated outside the perforating guns upon detonation, so the guns are released as soon as they fire.

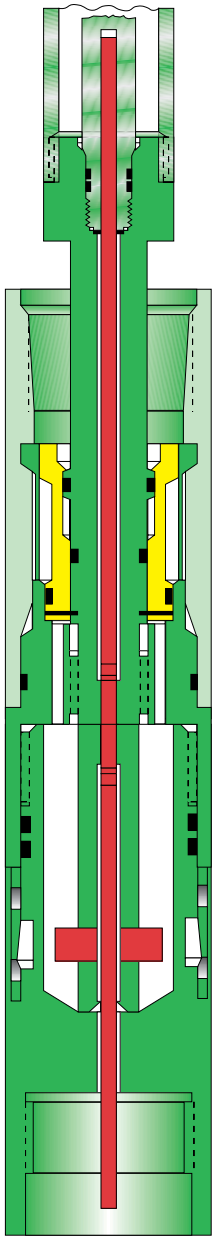

Features and Benefits

- Can be used with most mechanical and pressure-actuated firing heads
- Allows for immediate release of the guns
- Leaves the tubing fully open after the guns are released
- Eliminates the need to run wireline to shift the guns
- Reduces the chance of the guns sticking because of debris

Automatic Release

Thread Size and Type	2 3/8 (60.33) EUE	2 7/8 (73.03) EUE	2 7/8 (73.03)	3 1/2 (88.90) EUE	4 1/2 (114.30)
in. (mm)	8 Rd	8 Rd	High Pressure	8 Rd	OD Box
Assembly Numbers	100005255 100005226	100005233 100005234 100005235 100155754	100014158 100010045	100005236 100156106	100155752
Maximum OD in. (mm)	2.88 (73.15)	3.38 (85.85)	3.38 (85.85)	3.78 (96.01)	4.5 (114.30)
ID After Release in. (mm)	2.125 (53.98)	2.72 (69.09)	2.527 (64.186)	2.99 (75.95)	3.67 (93.22)
Maximum Operating Pressure psi (bars)	20,000 (1380)	20,000 (1380)	20,000 (1380)	20,000 (1380)	20,000 (1380)
Minimum Operating Pressure psi (bars)	1,500 (103)	1,500 (103)	500 (34)	1,500 (103)	1,500 (103)
Tensile Strength lb (kg)	49,500 (22 400)	68,000 (30 800)	68,000 (30 800)	68,000 (30 800)	115,000 (52 100)
Maximum Differential Pressure psi (bars)	15,000 (1035)	10,000 (690)	17,000 (1,170)	10,000 (690)	9,500 (655)
Overall Length	2.06 (0.63)	2.23 (0.68)	2.23 (0.68)	2.23 (0.68)	2.23 (0.68)

These ratings are guidelines only. For more information, consult your local JRC representative.

Balanced Isolation Tool

The ported Balanced Isolation Tool (BIT) assembly is used where either packer selection or well conditions preclude the use of a venting device. The ported BIT assembly replaces the fill disc assembly and is used in place of a perforated sub. The BIT prevents contamination of the fluid below it from the fluid above it. Debris or solids in the fluid above cannot pass through the glass disc that is in the floating piston. The glass disc prevents debris from setting on the firing head. Pressure is balanced across the glass barrier through equalizing ports in the piston. The ported BIT assembly is run between the firing head and packer. The recommended minimum distance from the BIT to the firing head is 30 ft.

Operation

The basic components of the BIT are a floating piston with a glass disc, a ported lower housing, and a top housing. The ported BIT is run with clean fluid below it. The upward travel of the floating piston is limited by the bottom of the top sub. A pressure increase above the glass barrier causes the piston to move down and forces fluid below the glass barrier out of the bleeder ports. A pressure increase below the glass barrier forces the piston to move up or forces fluid out of the bleeder ports. The piston moves up or down within its limits to prevent the glass barrier from breaking. The glass barrier remains intact until the bar passes through it. As fluid enters or leaves the tubing through the ports, debris on the glass barrier is washed off.

Features and Benefits

- Allows mud and debris to be circulated off the glass barrier through the flow ports above the glass barrier
- Allows displacement of the tubing with a lighter fluid or nitrogen before firing the guns
- Allows swabbing of the tubing to achieve differential pressure
- Allows stopping and circulating at any depth since flow ports are always open
- Can be run with either a mechanical or pressure-actuated firing head

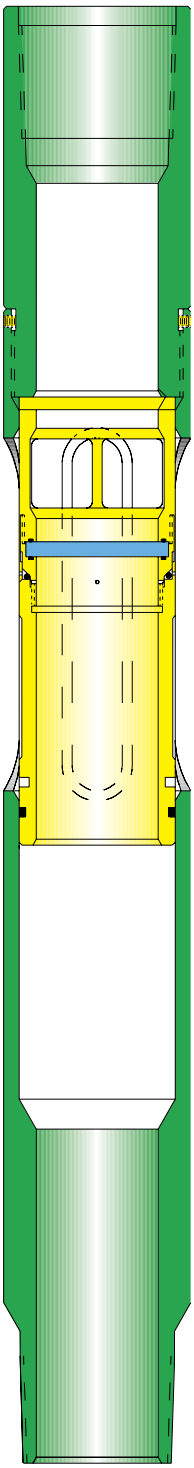

Balanced Isolation Tool

Balanced Isolation Tool

Thread Size and Type	1.90 (48.26) EUE	2 3/8 (60.33) EUE	2 7/8 (73.03) EUE	3 1/2 (88.90) EUE
in. (mm)	10 Rd box x pin	8 Rd box x pin	8 Rd box x pin	8 Rd box x pin
Assembly Number	120002203	100014322	100014323	100156936
Extreme Environment Kit	993.801	100014379	100157190	100157192
Redress Kit	100157195	100014377	100014378	100157191
Maximum OD in. (mm)	2.50 (63.50)	3.10 (78.74)	3.75 (95.25)	4.25 (107.95)
Minimum ID in. (mm)	1.61 (40.89)	2.0 (50.80)	2.44 (61.98)	3.0 (76.20)
Flow Area in.² (cm²)	2.03 (13.10)	3.14 (20.27)	4.68 (30.19)	7.07 (45.60)
Number of Ports	4	4	4	4
Tensile Strength lb (kg)	110,000 (49 800)	155,000 (70 200)	200,000 (90 700)	280,000 (126 900)
Collapse Pressure psi (bars)	16,000 (1100)	17,000 (1170)	18,000 (1240)	16,000 (1100)

These ratings are guidelines only. For more information, consult your local JRC representative.

Maximum Differential Bar Vent

The Maximum Differential Bar Vent Assembly (MDBV) is a vent run between the perforating guns and the packer. After the packer is set, the opening of the vent creates communication between the tubing and rathole. The vent is opened by breaking the plug inside the tool and allowing the sleeve to uncover the ports. Running the MDBV allows the operator to run the tubing in the well with no hydrostatic pressure in the tubing.

Operation

The MDBV is held closed by a chamber of silicone fluid, which keeps a spring compressed. When the silicone fluid is released from the chamber, the spring extends and opens the vent. Once the break plug is broken, the silicone fluid drains into the tubing. The MDBV should not be used when the hydrostatic pressure in the tubing exceeds 1,000 psi. If you wish to open the vent before dropping the detonating bar, you can drop a special tube that will open the vent and not fire the guns. When the bar is dropped, it will pass through the tube and fire the guns.

Features and Benefits

- Operates with a minimum amount of fluid in the tubing
- Allows maximum differential pressure when perforating in lower-pressure formations
- Does not depend on tubing hydrostatic pressure to operate
- Is assisted mechanically by an operating spring to help ensure full and complete opening
- Can be used in wells with open perforations to achieve an underbalance when guns are fired to add new perforations

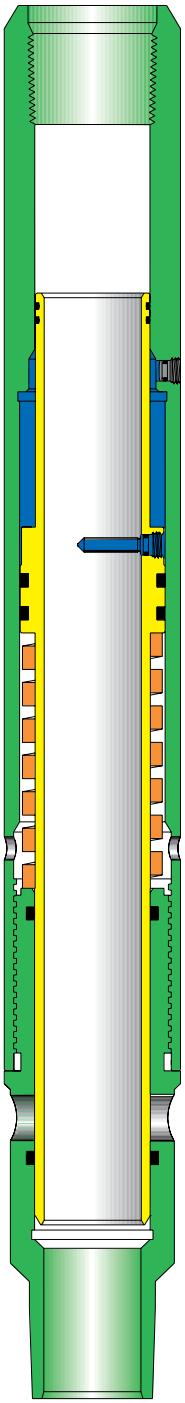

Maximum Differential Bar Vent

Maximum Differential Bar Vent

Thread Size and Type	2 3/8 (60.33) EUE	2 7/8 (73.03) EUE	3 1/2 (88.9) EUE
in. (mm)	8 Rd box x pin	8 Rd box x pin	8 Rd box x pin
Assembly Number	100005291	100005294	100156853
Redress Kit	100014376	100005368	100157194
Maximum OD in. (mm)	3.36 (92.20)	3.88 (98.55)	4.50 (114.30)
Minimum ID in. (mm)	2.0 (50.80)	2.25 (57.15)	2.75 (69.85)
Maximum Operating Pressure (Differential) psi (bars)	10,000 (690)	9,000 (620)	8,000 (550)
Minimum Operating Pressure (Differential) psi (bars)	None	None	None
Temperature Rating (Limited by silicone fluid) °F (°C)	350 (176)	350 (176)	350 (176)
Tensile Strength lb (kg)	221,000 (100 200)	231,000 (104 700)	245,000 (111 000)
Burst Pressure psi (bars)	19,500 (1345)	19,000 (1310)	14,000 (965)
Collapse Pressure psi (bars)	16,500 (1135)	13,000 (895)	14,000 (965)
Overall Length ft (m)	2.48 (0.75)	2.58 (0.79)	2.95 (0.90)
Number of Ports	5	4	4
ID of Ports in. (mm)	1.0 (25.40)	1.13 (28.70)	1.75 (44.45)
Flow Area of Ports in^2 (cm^2)	3.92 (25.29)	4.01 (27.87)	9.58 (61.81)

These ratings are guidelines only. For more information, consult your local JRC representative.

Bar Pressure Vent

The Bar Pressure Vent (BPV) is designed to achieve a differential pressure between the formation and tubing string. The tool safely allows a differential pressure in wells with existing open perforations or in unperforated wells. The BPV is an internal sliding-sleeve tool, actuated by pressure in the tubing. It is run between the packer and the guns.

Operation

The BPV consists of a ported housing and a sliding sleeve. The sliding sleeve is isolated from the tubing pressure by a break plug with a hollow center. The BPV is activated when the detonating bar is dropped through the tubing and shears the hollow break plug. This action allows the pressure in the tubing to force the sleeve upward, uncovering the ports. A lock ring locks the sleeve open. The detonating bar continues downward to strike the firing head. If the inward differential pressure across the tool exceeds 2,000 psi, it is strongly recommended that a pressure differential reduction stub be installed above the BPV. If you wish to open the vent before dropping the detonating bar, you can drop a special tube that will open the vent and not fire the guns. When the bar is dropped, it will pass through the tube and fire the guns.

Features and Benefits

- Offers an inexpensive way to create the necessary underbalance
- Allows the hole to be totally contained at the wellhead before the surge
- Once the port is opened, the sleeve is locked in place
- Can be run with any packer
- Does not rely on tubing manipulation; hydrostatic pressure in the tubing is the only force required

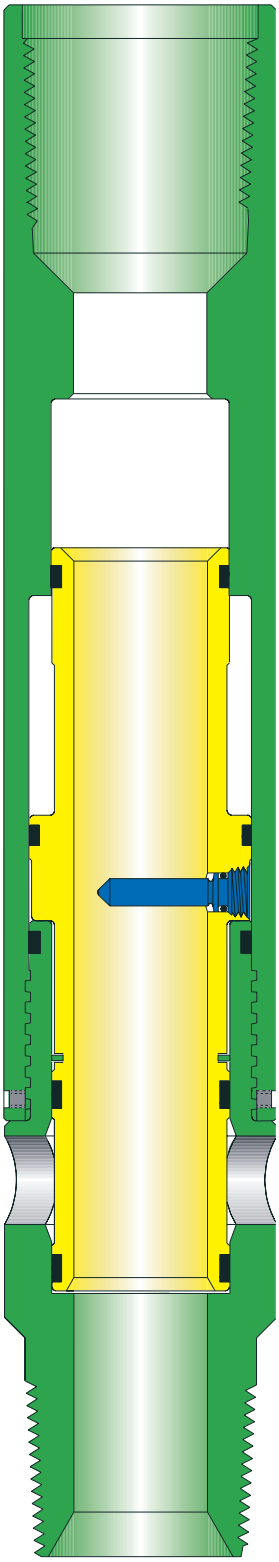

Bar Pressure Vent

Bar Pressure Vent

Thread Size and Type	2 3/8 (60.33) EUE	2 3/8 (63.33) EUE	2 7/8 (73.03) EUE	3 1/2 (88.90) EUE
in. (mm)	8 Rd box x pin	8 Rd box x pin	8 Rd box x pin	8 Rd box x pin
Assembly Number	101201951	100155788	100010328	100155789
Extreme Environment Kit	101201952	101224570	101224571	100157219
Redress Kit	100157211	100157216	100157217	100157218
Maximum OD in. (mm)	3.06 (77.72)	3.63 (92.20)	3.88 (98.55)	5.0 (127.0)
Minimum ID in. (mm)	1.50 (38.10)	2.0 (50.80)	2.25 (57.15)	2.75 (69.85)
Maximum Operating Pressure psi (bars)	20,000 (1380)	15,000 (1035)	15,000 (1035)	15,000 (1035)
Maximum Differential Pressure psi (bars)	8,000 (550)	8,000 (550)	8,000 (550)	8,000 (550)
Minimum Operating Pressure psi (bars)	1,000 (69)	1,000 (69)	1,000 (69)	1,000 (69)
Flow Area in.² (cm²)	1.77 (11.40)	3.14 (20.27)	3.98 (25.65)	5.94 (38.32)
Number and ID of Ports in. (mm)	4 @ 1.0 (25.40)	4 @ 1.0 (25.40)	4 @ 1.13 (28.70)	4 @ 1.75 (44.45)
Temperature Rating °F (°C)	Determined by O-rings	Determined by O-rings	Determined by O-rings	Determined by O-rings
Tensile Strength lb (kg)	140,000 (63 400)	146,000 (66 200)	160,000 (72 500)	400,000 (181 400)
Burst Pressure psi (bars)	24,000 (1655)	18,000 (1240)	19,000 (1310)	22,000 (1515)
Collapse Pressure psi (bars)	20,000 (1380)	22,000 (1515)	17,000 (1170)	18,000 (1240)
Overall Length ft (m)	1.46 (0.44)	1.46 (0.44)	1.57 (0.48)	1.77 (0.54)

These ratings are guidelines only. For more information, consult your local JRC representative.

Pressure-Operated Vent

The Pressure-Operated Vent (POV) is designed to achieve a differential pressure between the formation and tubing string and to provide a way to open the vent and test the packer before the guns are fired. When the guns have been positioned and the packer has been set, the predetermined amount of fluid is added to the tubing. Adding the fluid into the tubing causes the POV to open and creates the proper pressure differential before firing. Nitrogen may also be used with, or in place of, the fluids to obtain the necessary hydrostatic pressure in the tubing.

Operation

The POV consists of a ported housing, a sliding sleeve, and a set of shear pins. The sleeve is held in the closed position by a variable number of shear pins. The pins are isolated from annular pressure and are only exposed to the tubing hydrostatic. The POV will open when the proper amount of hydrostatic pressure is applied to the shear pins. The amount of hydrostatic it takes to open the POV depends on how many shear pins are installed in the tool. When the pins shear, the hydrostatic pressure forces the sleeve upward, which uncovers the flow ports. The sleeve is then locked into the open position.

Features and Benefits

- Allows the vent to be opened without the guns being fired
- Allows the packer to be tested before the guns are fired
- Fills tubing automatically when run with VCV
- Can be run with mechanical or pressure-actuated firing heads
- Is useful in highly deviated wells
- Is compatible with any packer

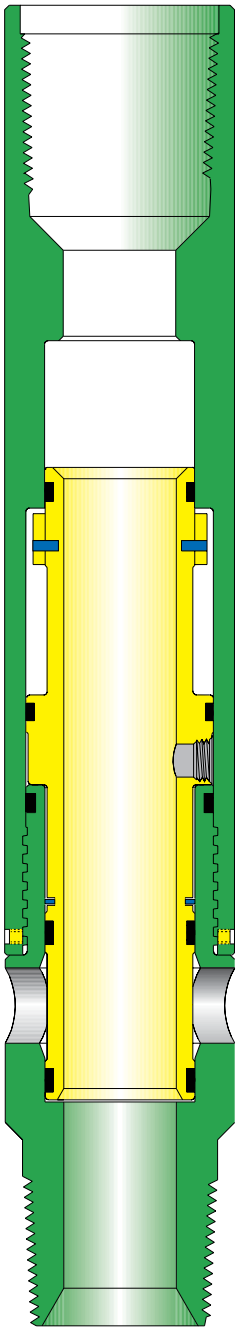

Pressure-Operated Vent

Pressure-Operated Vent

Thread Size and Type	2 3/8 (60.33) EUE	2 3/8 (63.33) EUE	2 7/8 (73.03) EUE	3 1/2 (88.90) EUE
in. (mm)	8 Rd box x pin	8 Rd box x pin	8 Rd box x pin	8 Rd box x pin
Assembly Number	101201951	100155788	100010328	100155789
Extreme Environment Kit	101201952	101224570	101224571	100157219
Redress Kit	100157211	100157216	100157217	100157218
Maximum OD in. (mm)	3.06 (77.72)	3.63 (92.20)	3.88 (98.55)	5.0 (127.0)
Minimum ID in. (mm)	1.50 (38.10)	2.0 (50.80)	2.25 (57.15)	2.75 (69.85)
Maximum Operating Pressure psi (bars)	20,000 (1380)	15,000 (1035)	15,000 (1035)	15,000 (1035)
Maximum Differential Pressure psi (bars)	8,000 (550)	8,000 (550)	8,000 (550)	8,000 (550)
Minimum Operating Pressure psi (bars)	1,000 (69)	1,000 (69)	1,000 (69)	1,000 (69)
Flow Area in.² (cm²)	1.77 (11.40)	3.14 (20.27)	3.98 (25.65)	5.94 (38.32)
Number and ID of Ports in. (mm)	4 @ 1.0 (25.40)	4 @ 1.0 (25.40)	4 @ 1.13 (28.70)	4 @ 1.75 (44.45)
Temperature Rating °F (°C)	Determined by O-rings	Determined by O-rings	Determined by O-rings	Determined by O-rings
Tensile Strength lb (kg)	140,000 (63 400)	146,000 (66 200)	160,000 (72 500)	400,000 (181 400)
Burst Pressure psi (bars)	24,000 (1655)	18,000 (1240)	19,000 (1310)	22,000 (1515)
Collapse Pressure psi (bars)	20,000 (1380)	22,000 (1515)	17,000 (1170)	18,000 (1240)
Overall Length	1.46 (0.44)	1.46 (0.44)	1.57 (0.48)	1.77 (0.54)

These ratings are guidelines only. For more information, consult your local JRC representative.

Vann™ Circulating Valve

The Vann™ Circulating Valve (VCV) is designed to be used as a fillup valve or as a circulating valve for displacing well fluids before setting a packer. After the fluid is displaced, the operator applies pressure to the tubing or annulus to rupture a disc and close the VCV.

Operation

The VCV consists of a ported housing, a sliding sleeve, and a rupture disc, which must be ordered separately. The sliding sleeve, which has two air chambers, is open while the tool is run in the hole. The rupture disc is available for different pressure ratings as needed. The amount of hydrostatic pressure required to actuate the VCV depends on the rating of the rupture disc. Once the disc ruptures, the hydrostatic pressure enters the lower air chamber through the ruptured disc, forcing the sliding sleeve upward to cover the flow ports. Operating pressure can be pump pressure applied after the VCV is at the bottom of the well or applied by hydrostatic pressure when the tool is run in the hole.

Features and Benefits

- Can be used as a circulating and shutoff valve
- Is often run with other venting or production devices
- Is economical and reusable

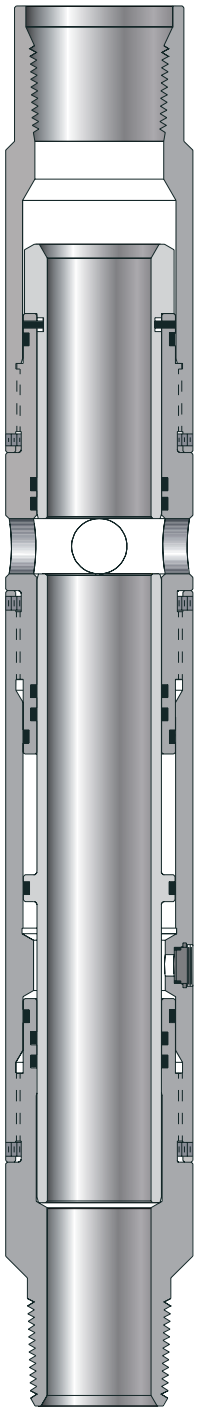

Vann™ Circulating Valve

Vann™ Circulating Valve

Thread Size and Type	2 3/8 (60.33) EUE	*2 7/8 (73.03) EUE
in. (mm)	8 Rd box x pin	8 RD box × Pin
Assembly Number	101015732	1200038456
Maximum OD in. (mm)	3.38 (85.85)	4.65 (188.11)
Minimum ID in. (mm)	1.875 (47.62)	2.12 (53.85)
Maximum Pressure Operating psi (bars)	15,000 (1035)	15,000 (1035)
Minimum Operating Pressure psi (bars)	1,000 (69)	1,000 (69)
Temperature Rating °F (°C)	Determined by O-rings	Determined by O-rings
Tensile Strength lb (kg)	225,000 (102 000)	392,000 (177 700)
Burst Pressure psi (bars)	22,000 (1515)	20,000 (1380)
Collapse Pressure psi (bars)	18,000 (1250)	18,000 (1250)
Overall Length ft (m)	2.11 (0.64)	3.45 (1.05)
Number of Ports	4	6
ID of Ports in. (mm)	1.0 (25.4)	1.0 (25.4)
Flow Area of Ports in.² (cm²)	3.14 (20.26)	4.71 (30.39)

These ratings are guidelines only. For more information, consult your local JRC representative.

*Optional connections are: 2 7/8-IF and 3 1/2-IF

Annulus-Pressure Crossover Assembly

The Annulus-Pressure Crossover Assembly (APCA) allows the use of annulus pressure to actuate any one of several firing heads. This assembly is compatible with retrievable packers of all types and sizes.

Operation

The APCA creates a pressure chamber above the firing head that is equalized with the pressure in the casing annulus. Once the packer has been set, the pressure on the annulus can be increased to actuate a pressure-actuated firing head. The pressures in the annulus and the tubing can also be manipulated to create the differential pressure necessary to actuate a differential-type firing head.

Features and Benefits

- May be used as the annulus firing system on wells with nonfull-opening test tools and partially filled drillstring
- May be used as the annulus firing system on horizontal wells
- Allows the use of below-packer venting devices along this assembly

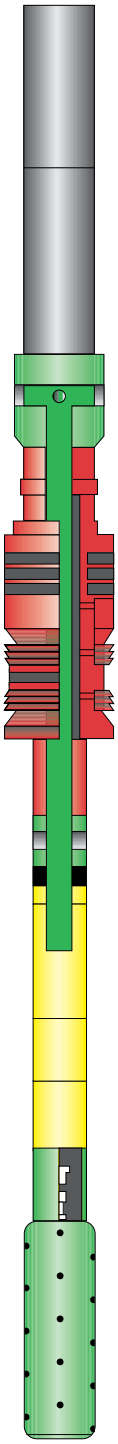

Annulus-Pressure Crossover Assembly

Annulus-Pressure Crossover Assembly

Thread Size and Type	2 3/8 (60.33) EUE	2 7/8 (73.03) EUE
in. (mm)	8Rd	8Rd
Assembly Number	100014175	100155786
Maximum OD in. (mm)	3.56 (90.42)	5.0 (127)
Minimum ID	Non Full-bore	Non Full-bore
Maximum Operating Pressure	Determined by tubulars	Determined by tubulars
Maximum Differential Pressure psi (bars)	16,000 (1100)	16,000 (1100)
Flow Area in.² (cm²)	2.25 (14.52)	4.75 (30.65)
Temperature Rating °F (°C)	Determined by O-rings	Determined by O-rings
Tensile Strength lb (kg)	190,000 (86 200)	270,000 (122 400)
Burst Pressure psi (bars)	27,000 (1860)	22,000 (1515)
Collapse Pressure psi (bars)	16,000 (1100)	16,000 (1100)
Overall Length ft (m)	12.35 (3.76)	12.60 (3.84)
Minimum Makeup Length ft (m)	9.15 (2.79)	9.40 (2.87)

These ratings are guidelines only. For more information, consult your local JRC representative.

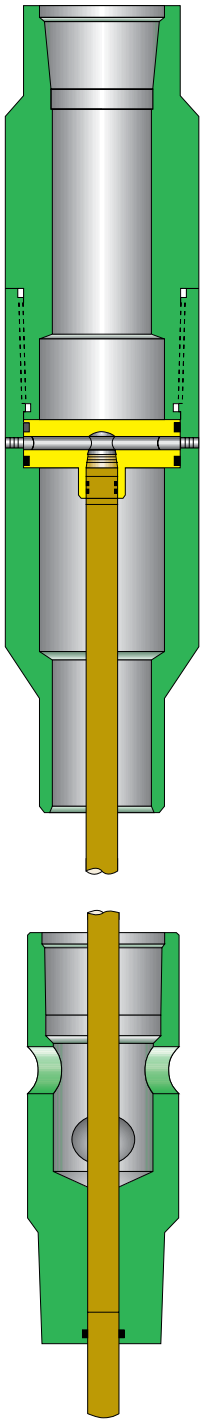

Annulus-Pressure Crossover Assembly

Below-Packer Vent Device

The Below-Packer Vent Device (BPVD) was developed for use with the Annulus-Pressure Crossover Assembly (APCA). Surface pressure applied to the annulus is transmitted through the APCA to a closed chamber below the BPVD and above a pressure-responsive firing head. The BPVD can be set to work before or after the perforating assembly is detonated.

Operation

To open the BPVD, a predetermined annulus pressure is transmitted through the APCA to below the BPVD. This pressure then ruptures a disc in the lower housing of the BPVD. An actuating piston then forces the venting sleeve away from the production ports. This action establishes communication with the tubing string.

Features and Benefits

- Does not require tubing hydrostatic pressure to operate
- Can operate in highly deviated wells
- Can be used in wells with low formation pressure
- Eliminates nitrogen requirements
- Allows maximum underbalance
- Is compatible with several types of firing heads
- Features reliable and very accurate pressure response

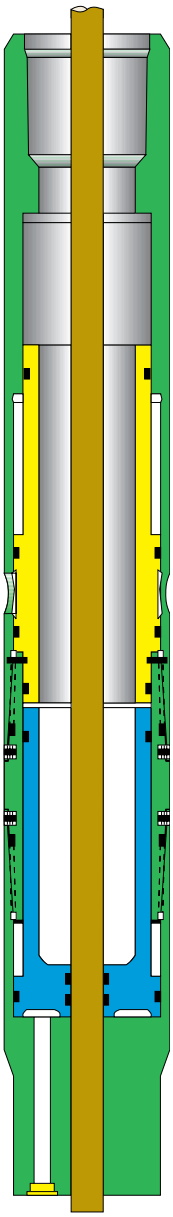

Below-Packer Vent Device

Below-Packer Vent Device

Thread Size and Type	2 3/8 (60.33) EUE	2 7/8 (73.03) EUE
in. (mm)	8 Rd box x pin	8 Rd box x pin
Assembly Number	100155787	100014176
Maximum OD in. (mm)	3.38 (85.85)	3.88 (98.55)
Minimum ID in. (mm)	Non Full-bore	Non Full-bore
Maximum Operating Pressure psi (bars)	15,000 (1035)	15,000 (1035)
Minimum Operating Pressure psi (bars)	1,000 (69)	1,000 (69)
Temperature Rating °F (°C)	Determined by O-rings	Determined by O-rings
Tensile Strength lb (kg)	150,000 (68 000)	170,000 (77 000)
Burst Pressure psi (bars)	25,000 (1725)	25,000 (1725)
Collapse Pressure psi (bars)	22,000 (1515)	15,000 (1035)
Overall Length ft (m)	2.42 (0.74)	2.43 (0.74)
Number of Ports	4	5
ID of Ports in. (mm)	1.0 (25.4)	1.0 (25.4)

These ratings are guidelines only. For more information, consult your local JRC representative.

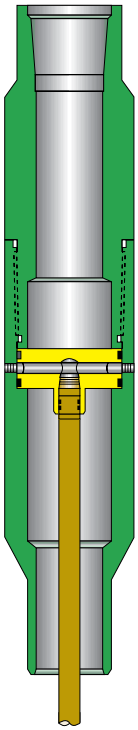

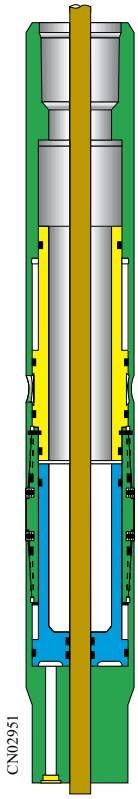

Below-Packer Vent Device

Description

The Fill Disc Assembly (FDA) is used where either packer selection or well conditions preclude the use of a venting device. The FDA is used in place of a perforated sub, and replaces the Balanced Isolation Tool in wells with reasonably clean fluids. The glass disc prevents debris from settling on the firing head. Pressure is equalized across the glass disc.
The FDA is run between the firing head and packer. The recommended minimum distance from the FDA to the firing head is 30 ft.

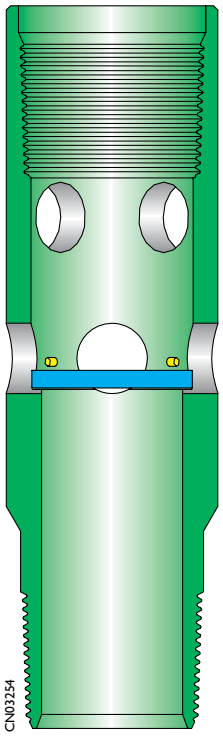

Fill Disc Assembly

Features and Benefits

The FDA

- Allows debris to be circulated off the glass disc through the flow ports above the glass disc
- Acts as a perforated sub for circulating fluid displacement with nitrogen and swabbing
- Can be run with either a mechanical or pressure-actuated firing head

Operation

The FDA consists of a ported housing with a glass disc installed in the ID across the lower set of ports. The disc is not sealed, so pressure can equalize across the glass. Any debris falling out of the tubing or fluid above the glass will land on the glass disc. This debris can be circulated off the disc, or if it is not a large amount, it will be displaced out the ports by the detonating bar falling through it.
Once the bar breaks through the disc, it should be falling in clean fluid all the way to the firing head. In mud systems or wells with a known debris problem, the Balanced Isolation Tool is recommended in place of the FDA.

Fill Disc Assembly

Thread Size and Type	$2^3/_8$ (60.33) EUE	$2^7/_8$ (73.03) EUE	$3^1/_2$ (88.90) EUE
in. (mm)	8Rd box x pin	8Rd box x pin	8Rd box x pin
Assembly Number	100005295	100005297	100005299
Maximum OD in. (mm)	3.01 (76.45)	3.51 (89.15)	4.20 (106.68)
Minimum ID in. (mm)	1.98 (50.29)	2.44 (61.98)	3.0 (76.20)
Flow Area in.² (cm²)	6.28 (40.54)	7.88 (50.8)	14.13 (91.20)
Number of Ports	8	8	8
Tensile Strength lb (kg)	235,000 (106 400)	275,000 (124,700)	400,000 (181,600)
Overall Length ft (m)	0.86 (0.26)	0.88 (0.27)	0.89 (0.27)

Jet Research Center offers a variety of wireline-conveyed firing systems. This section provides information concerning the most commonly used tools and adapters for through-tubing wireline operations and casing wireline operations. These products are field-proven to offer safety and reliability for a variety of applications.

1 $^{7}/_{16}$-in. Cable Head Assembly (Cone Type)

1 $^{7}/_{16}$-in. Cable Head Assembly

Item	Description	Part No.
1	Cablehead Assembly - 7/32 in. Line	101298900
	Cablehead Assembly - 5/16 in. Line	116375
	Cablehead Assembly - 15/32 in. Line	168849
2	1 7/16 in. Contact Sub Assemblly	101015938
3	Cablehead Body	168813
4	Fishing Neck - 7/32 in. Line	101298908
	Fishing Neck - 5/16 in. Line	101294722
	Fishing Neck - 15/32 in. Line	168854
5	Rope Socket Cone - 7/32 in. Line	101298911
	Rope Socket Cone - 5/16 in. Line	168855
	Rope Socket Cone - 15/32 in. Line	168850
6	Compression Washer Set - 1/4 in. Hole - 3/32 in., 1/8 in., and 5/32 in. Thick	101298912
	Compression Washer - 1/4 in. Hole - 3/32 in. Thick	168851
	Compression Washer - 1/4 in. Hole - 1/8 in. Thick	168852
	Compression Washer - 1/4 in. Hole - 5/32 in. Thick	168853
	Compression Washer Set - 11/32 in. Hole - 3/32 in., 1/8 in., and 5/32 in. Thick	101298913
	Compression Washer - 11/32 in. Hole - 3/32 in. Thick	168975
	Compression Washer - 11/32 in. Hole - 1/8 in. Thick	168976
	Compression Washer - 11/32 in. Hole - 5/32 in. Thick	168977
	Compression Washer Set - 15/32 in. Hole - 3/32 in., 1/8 in., and 5/32 in. Thick	101298914
	Compression Washer - 15/32 in. Hole - 3/32 in. Thick	168978
	Compression Washer - 15/32 in. Hole - 1/8 in. Thick	168979
	Compression Washer - 15/32 in. Hole - 5/32 in. Thick	168980
7	Boot - 3/16 in. to 7/32 in.	100141982
	Boot - 5/16 in. to 7/16 in.	100141983

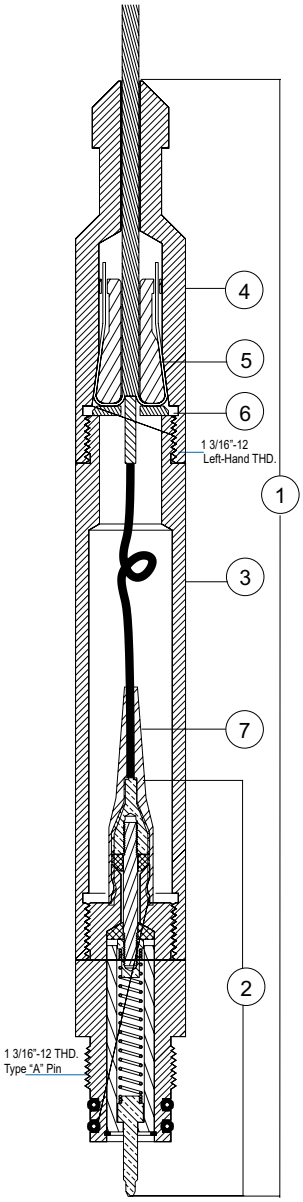

1 $^{7}/_{16}$-in.
Cable Head Assembly
(Cone Type)

Double-Sealed Contact Sub-Assembly

Item	Description	Part No.
1	Contact Sub Assembly Complete - Items 2 -12	141346
	Contact Kit - Items 2 -12	141347
2	Contact Plunger	100118477
3	Snap Ring	100118476
4	Plunger Insulator	100010869
5	Contact Spring	133923
6	Contact Nut	100071501
7	Insulator - 5/8 in.	100071500
8	Contact Rod (insulated)	168811
9	Insulator - 1/2 in.	168809
10	Terminal Nut	168808
11	Double Sealed Contact Sub Body	168810
12	O-Ring, Buna 90 Duro #211 (2 Req.)	100015032
13	Boot - 3/16 in. to 7/32 in.	100141982
	Boot - 5/16 in. to 7/16 in.	100141983

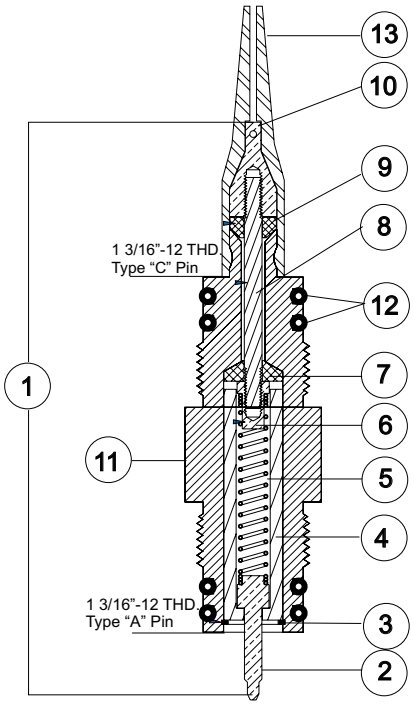

Double-Sealed Contact Sub-Assembly

Spring-Loaded Contact Sub-Assembly

Item	Description	Part No.
1	Contact Sub Assembly Complete - Items 2 -12	101015938
	Contact Kit - Items 2 -12	114350
2	Terminal Nut	168808
3	Insulator - 1/2 in.	168809
4	Contact Rod (Insulated)	100118526
5	Insulator - 5/8 in.	100071500
6	Contact Nut	100071501
7	Contact Spring	133923
8	Plunger Insulator	100010869
9	Snap Ring	100118476
10	Contact Plunger	100118477
11	Contact Sub Body	168807
12	O-Ring, Buna 90 Duro #211 (2 Req.)	100015032
13	Boot - 3/16 in. to 7/32 in.	100141982
	Boot - 5/16 in. to 7/16 in.	100141983

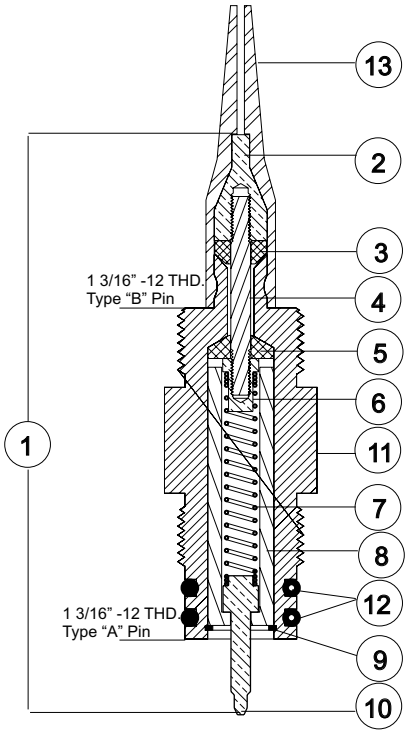

Spring-Loaded Contact Sub-Assembly

1 $^{7}/_{16}$-in. Double Box Contact Sub-Assembly

Double Pin Contact Sub-Assembly

Item	Description	Part No.
1	Double Pin Contact Sub Assembly (Items 2 -10)	141351
2	Contact Rod (Insulated)	100118526
3	Insulator-5/8 in. (2 req.)	100071500
4	Contact Nut (2 req.)	100071501
5	Contact Spring (2 req.)	133923
6	Plunger Insulator (2 req.)	100010869
7	Snap Ring (2 req.)	100118476
8	Contact Plunger (2 req.)	100118477
9	Double Pin Contact Sub Body	168988
10	O-Ring, Buna 90 Duro #211 (2 Req.)	100015032
11	Contact Kit (Items 2 -8)	N/A

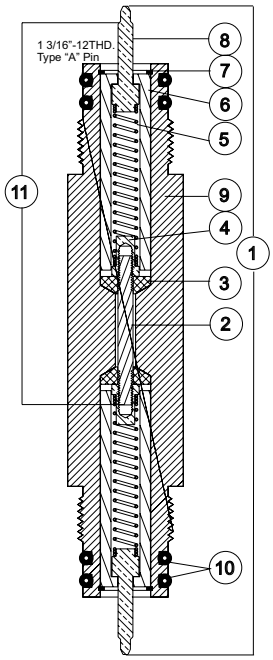

Double Pin Contact Sub-Assembly

Double Box Contact Sub-Assembly

Item	Description	Part No.
12	Double Box Contact Sub Assembly (Items 13 -16)	141353
13	Contact Rod (Insulated)	100118526
14	Insulating Washer - 1 in. (2 req.)	101231631
15	Contact Socket (2 req.)	129345
16	Double Box Contact Sub Body	169005
17	Contact Kit (Items 13 -15)	141354

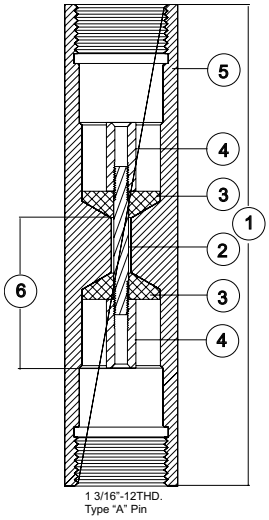

Double Box Contact Sub-Assembly

1 $^{7}/_{16}$-in. Adapter Sub Cablehead Expendable Guns

1 $^{7}/_{16}$-in. Adapter Sub Cablehead Expendable Guns

Item	Description	Part No.
1	Complete Assemby	100142036
2	Boot for $^{1}/_{16}$ in. Wire	100004173
3	Terminal Nut	100015042
4	Flat Washer	100000545
5	Tubing - $^{3}/_{16}$ in TFE	100004210
6	Contact Rod	100142038
7	Lower Insulator	100141405
8	Lower Receptacle	100141486
9	Adapter Sub	100142037

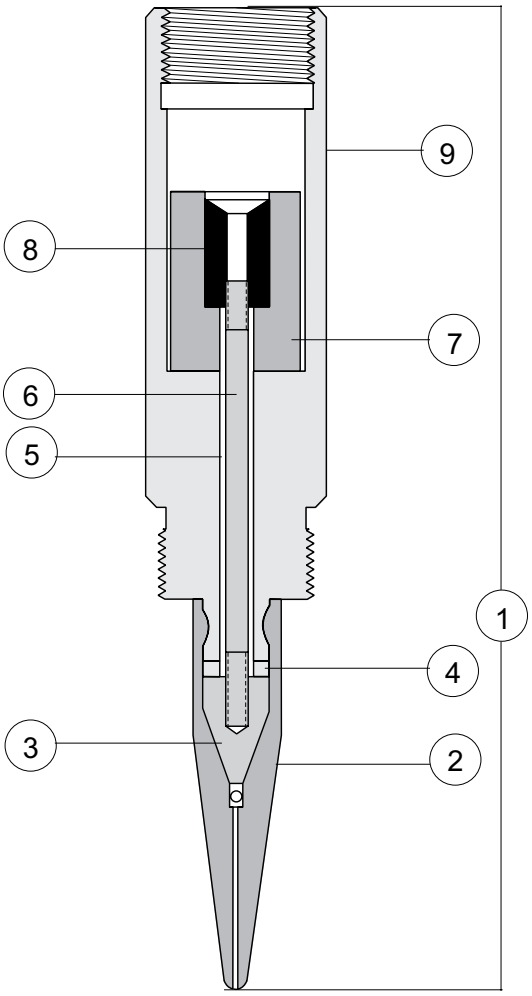

1 $^{7}/_{16}$-in. Adapter Sub Cablehead Expendable Guns

JRC Setting Tools

Item	Description	Part No.
1	Complete Assembly	100013383
2	Body	100142978
3	Contact Rod	100004227
4	Insulating Washer	100004179
5	Tubing, Teflon .387 in.	100125575
6	Nut - Hex $^{3}/_{8}$ - 16NC, Stnls	100000550
7	O-ring, Buna 90 Duro #214	100113859
8	O-ring, Buna 90 Duro #214	100000161

***Teflon is a trademark of E.I. Dupont De Nemours**

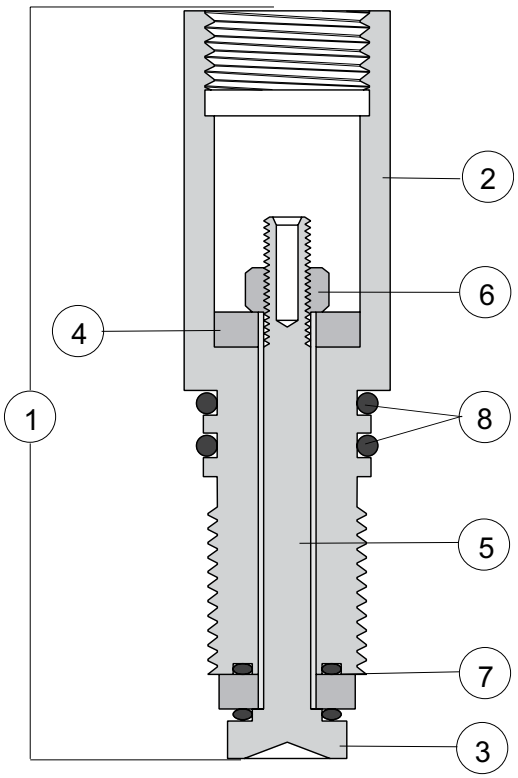

JRC Setting Tools

Contact Sinker Bars

Item	Description	Part No.
1	Assembly, 1 -7/16 in. -3 ft. Lead Filled (Items 3 - 13)	168417
	Assembly, 1 -7/16 in. -5 ft. Lead Filled (Items 3 - 13)	168983
	Assembly, 1 -7/16 in. -7 ft. Lead Filled (Items 3 - 13)	168984
	Assembly, 1 -11/16 in. -3 ft. Lead Filled (Items 3 - 13)	12839
	Assembly, 1 -11/16 in. -5 ft. Lead Filled (Items 3 - 13)	100118463
	Assembly, 1 -11/16 in. -7 ft. Lead Filled (Items 3 - 13)	100118465
	Assembly, 2 in. -3 ft. Lead Filled (Items 3 - 13)	101294716
	Assembly, 2 in. -5 ft. Lead Filled (Items 3 - 13)	100118464
	Assembly, 2 in. -7 ft. Lead Filled (Items 3 - 13)	100118466
	Assembly, 1 -7/16 in. -3 ft. Tungsten Filled (Items 3 - 13)	TBA
	Assembly, 1 -7/16 in. -5 ft. Tungsten Filled (Items 3 - 13)	73066
	Assembly, 1 -7/16 in. -7 ft. Tungsten Filled (Items 3 - 13)	73376
	Assembly, 1 -11/16 in. -3 ft. Tungsten Filled (Items 3 - 13)	101294717
	Assembly, 1 -11/16 in. -5 ft. Tungsten Filled (Items 3 - 13)	100118468
	Assembly, 1 -11/16 in. -7 ft. Tungsten Filled (Items 3 - 13)	101001487
	Assembly, 2 in. -3 ft. Tungsten Filled (Items 3 - 13)	100118467
	Assembly, 2 in. -5 ft. Tungsten Filled (Items 3 - 13)	100118469
	Assembly, 2 in. -7 ft. Tungsten Filled (Items 3 - 13)	100000441
	Assembly, 1 -7/16 in. -3 ft. All Steel (Items 3 - 13)	168985
	Assembly, 1 -7/16 in. -5 ft. All Steel (Items 3 - 13)	168986
	Assembly, 1 -7/16 in. -7 ft. All Steel (Items 3 - 13)	168987
	Assembly, 1 -11/16 in. -3 ft. All Steel (Items 3 - 13)	TBA
	Assembly, 1 -11/16 in. -5 ft. All Steel (Items 3 - 13)	100118461
	Assembly, 1 -11/16 in. -7 ft. All Steel (Items 3 - 13)	120009401
	Assembly, 2 in. -3 ft. All Steel (Items 3 - 13)	TBA
	Assembly, 2 in. -5 ft. All Steel (Items 3 - 13)	100160706
	Assembly, 2 in. -7 ft. All Steel (Items 3 - 13)	TBA
2	Contact Kit for 3 ft Bar (Items 3 - 11)	168981
	Contact Kit for 5 ft Bar (Items 3 - 11)	129357
	Contact Kit for 7 ft Bar (Items 3 - 11)	168982
	Contact Kit less Contact Rod (Items 3 - 10)	100010868
3	Contact Socket	100118473
4	Insulating Washer; 1 in.	100118474
5	Insulator; 5/8 in.	100071500
6	Contact Nut	100118475
7	Plunger Insulator	100010869
8	Contact Spring	133923
9	Snap Ring	100118476
10	Contact Plunger	100118477
11	Contact Rod for 3ft Bar (Insulated)	100118470
	Contact Rod for 5ft Bar (Insulated)	100118471
	Contact Rod for 7ft Bar (Insulated)	100160707
12	Sinker Bar Body	TBA
13	O-Ring, Buna 90 Duro #211 (2 Req.)	100015032

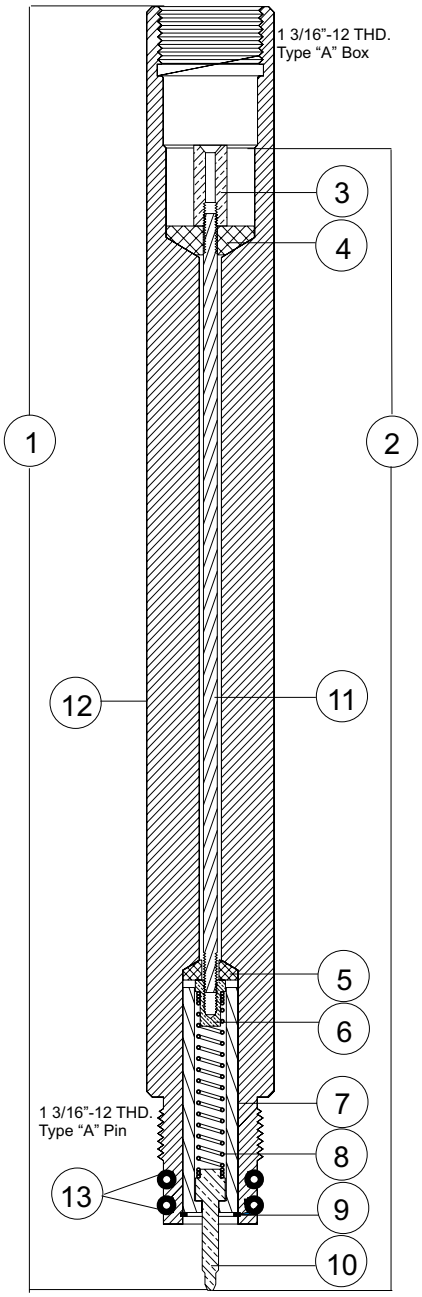

Contact Sinker Bars

Note: For High Pressure application, in excess of 15,000 psi, JRC recommends the use of high pressure rated accessories.

Top Magnetic Decentralizer Booted

Item	Description	Part No.
1	1-9/16 in. Top Magnetic Decentralizer Assembly (Items 2 - 13)	169039
	1-11/16 in. Top Magnetic Decentralizer Assembly (Items 2 - 13)	169053
	2 in. Top Magnetic Decentralizer Assembly (Items 2 - 13)	169070
	2-1/8 in. Top Magnetic Decentralizer Assembly (Items 2 - 13)	169085
2	Contact Kit (Items 3 - 7)	169043
3	Contact Socket	129345
4	Insulating Washer 1 in.	101231631
5	Contact Rod	169044
6	Insulator 1/2 in.	168809
7	Terminal Nut	168808
8	1-9/16 in. Top Magnetic Decentralizer Body	169042
	1-11/16 in. Top Magnetic Decentralizer Body	169054
	2 in. Top Magnetic Decentralizer Body	169071
	2-1/8 in. Top Magnetic Decentralizer Body	169086
9	O-Ring, Buna 90 Duro #211 (2 Req.)	100015032
10	Magnet Set f/ 1-9/16 in. - 2-1/8 in. Decentralizers	169055
11	Magnet f/ 1-9/16 in. - 2-1/8 in. Decentralizers (3 req.)	169045
12	Lock Pin f/ 1-9/16 in. - 2-1/8 in. Decentralizers	129349
13	Positioning Collar f/ 1-9/16 in. & 1-11/16 in. Decentralizers	169046
	Positioning Collar f/ 2 in. & 2-1/8 in. Decentralizers	169072
14	Boot - 3/16 in. to 7/32 in.	100141982
	Boot - 5/16 in. to 7/16 in.	100141983

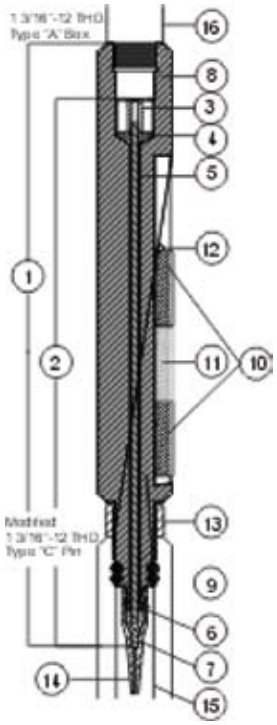

Top Magnetic Decentralizer Booted

Top Magnetic Decentralizer Banana Plug

Item	Description	Part No.
1	1-9/16 in. Top Magnetic Decentralizer Assembly (Items 2 - 13)	169047
	1-11/16 in. Top Magnetic Decentralizer Assembly (Items 2 - 13)	169051
	2 in. Top Magnetic Decentralizer Assembly (Items 2 - 13)	169073
	2-1/8 in. Top Magnetic Decentralizer Assembly (Items 2 - 13)	169095
2	Contact Kit (Items 3 - 7)	129346
3	Contact Socket	129345
4	Insulating Washer 1 in.	101231631
5	Contact Rod	169050
6	Insulator 5/8 in.	100071500
7	Banana Plug	168812
8	1-9/16 in. Top Magnetic Decentralizer Body	169049
	1-11/16 in. Top Magnetic Decentralizer Body	169052
	2 in. Top Magnetic Decentralizer Body	169084
	2-1/8 in. Top Magnetic Decentralizer Body	169096
9	O-Ring, Buna 90 Duro #211 (2 Req.)	100015032
10	Magnet Set for 1-9/16 in. - 2-1/8 in. Decentralizers	169055
11	Magnet for 1-9/16 in. - 2-1/8 in. Decentralizers (3 req.)	169045
12	Lock Pin for 1-9/16 in. - 2-1/8 in. Decentralizers	129349
13	Positioning Collar for 1-9/16 in. & 1-11/16 in. Decentralizers	169046
	Positioning Collar for 2 in. & 2-1/8 in. Decentralizers	169072

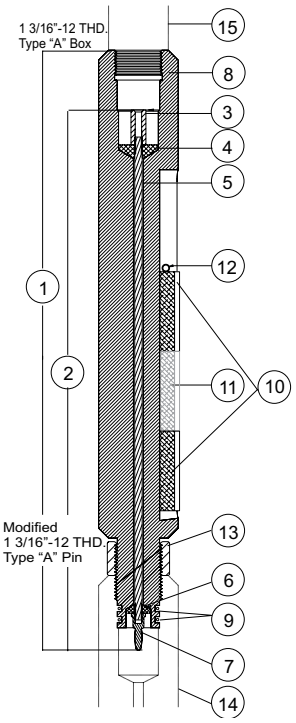

Top Magnetic Decentralizer Banana Plug

Bottom Magnetic Decentralizer with Knob

Item	Description	Part No.
1	1-9/16 in. Bottom Magnetic Decentralizer Assembly (Items 2 - 5)	168892
	1-11/16 in. Bottom Magnetic Decentralizer Assembly (Items 2 - 5)	169066
	2 in. Bottom Magnetic Decentralizer Assembly (Items 2 - 5)	169087
	2-1/8 in. Bottom Magnetic Decentralizer Assembly (Items 2 - 5)	169091
2	1-9/16 in. Bottom Magnetic Decentralizer Body	168893
	1-11/16 in. Bottom Magnetic Decentralizer Body	169067
	2 in. Bottom Magnetic Decentralizer Body	169088
	2-1/8 in. Bottom Magnetic Decentralizer Body	169082
3	Magnet Set for 1-3/8 in. - 2-1/8 in. Decentralizers	169055
4	Magnet for 1-3/8 in. - 2-1/8 in. Decentralizers (3 req.)	169045
5	Lock Pin for 1-9/16 in. - 2-1/8 in. Decentralizers	129349

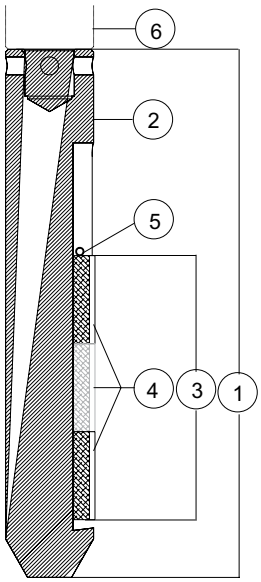

Bottom Magnetic Decentralizer with Knob

Bottom Magnetic Decentralizer with Pin

Item	Description	Part No.
1	1-9/16 in. Bottom Magnetic Decentralizer Assembly (Items 2 - 6)	169064
	1-11/16 in. Bottom Magnetic Decentralizer Assembly (Items 2 - 6)	169068
	2 in. Bottom Magnetic Decentralizer Assembly (Items 2 - 6)	169089
	2-1/8 in. Bottom Magnetic Decentralizer Assembly (Items 2 - 6)	169093
2	1-9/16 in. Bottom Magnetic Decentralizer Body	169065
	1-11/16 in. Bottom Magnetic Decentralizer Body	169069
	2 in. Bottom Magnetic Decentralizer Body	169090
	2-1/8 in. Bottom Magnetic Decentralizer Body	169094
3	Magnet Set for 1-3/8 in. - 2-1/8 in. Decentralizers	169055
4	Magnet for 1-3/8 in. - 2-1/8 in. Decentralizers (3 req.)	169045
5	Lock Pin for 1-9/16 in. - 2-1/8 in. Decentralizers	129349
6	O-Ring, #211 (2 req.)	100010532
7	Positioning Collar for 1 9/16 in. & 1 11/16 in. Decentralizers	169046
	Positioning Collar for 2 in. & 2 1/8 in. Decentralizers	169072

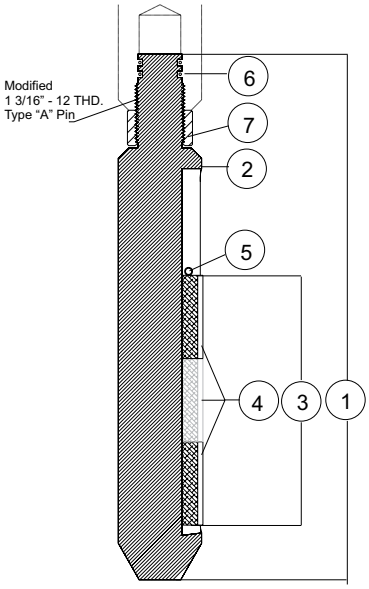

Bottom Magnetic Decentralizer with Pin

2 1/2-in. Upper Magnetic Decentralizer Boxed

Item	Description	Part No.
1	2-1/2 in. OD Upper Magnetic Decentralizer Assembly (Items 2 - 9)	169006
2	Contact Kit (Items 3 - 5)	169008
3	Contact Socket (2 req.)	129345
4	Insulating Washer 1 in. OD (2 req.)	101231631
5	Contact Rod (Insulated)	169009
6	2-1/2 in. OD Upper Magnetic Decentralizer Body	169007
7	Magnet Set	169012
8	Magnet (3 req.)	169011
9	Lock Pin	169010

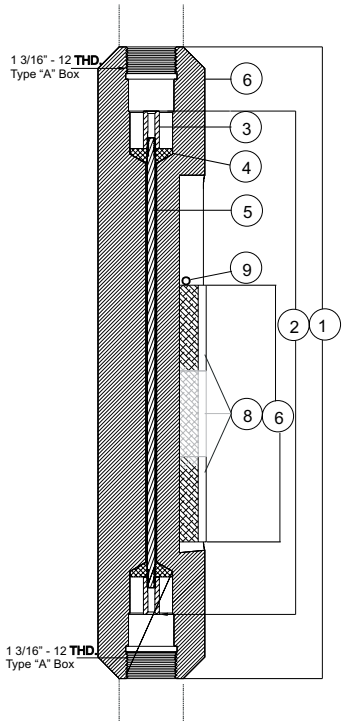

2 1/2-in. Upper Magnetic Decentralizer Boxed

2 1/2-in. Lower Magnetic Decentralizer with Knob

Item	Description	Part No.
1	2-1/2 in. O.D. Lower Magnetic Decentralizer Assembly (Items 2 - 5)	169036
2	2-1/2 in. O.D. Lower Magnetic Decentralizer Body	169038
3	Magnet Set	169012
4	Magnet (3 req.)	169011
5	Lock Pin	169010

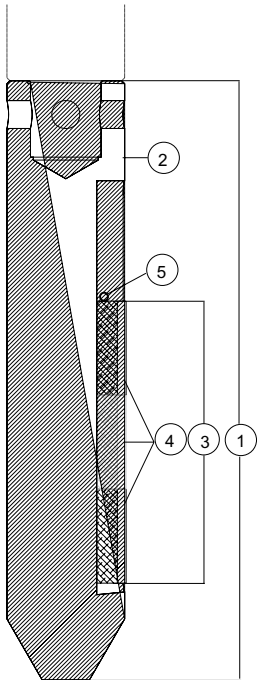

2 1/2-in. Lower Magnetic Decentralizer with Knob

1 1/16-in. Running Tools f/Coiled Tubing Cutters

Item	Description	Part No.
1	Cablehead Assembly	100110524
2	3ft Sinker Bar Assembly	100110525
3	CCL Assembly	100110526
4	Resistor Sub	100110527

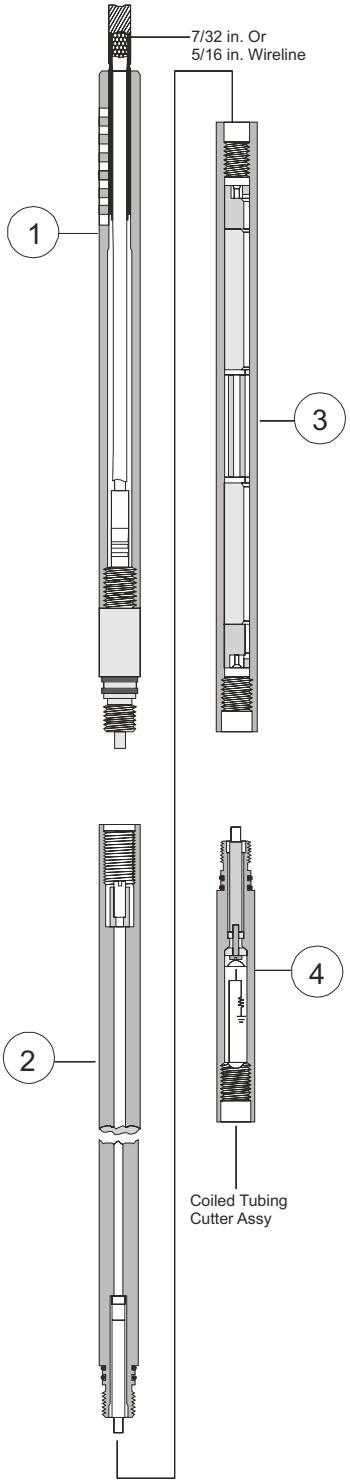

1 1/16-in. Running Tools f/Coiled Tubing Cutters

1 7/16-in. G Series CCL

Item	Description	Part No.
1	Complete Assembly	100141477
2	Housing	100141479
3	Receptacle - Upper	100141480
4	Screw - Rd Mach, #6-32 NC x 1/4 in.	100123608
5	Double Diode Assembly	100013295
6	Diode Holder	100141481
7	Pole Piece - Upper	100141483
8	Magnet	100141484
9	Tubing - 0.208-in. ID, Teflon	100161110
10	Coil Assembly - 2,000 W	100139873
11	Coil and Magnet Assembly	100141476
12	Ground Ring	100141489
13	Contact Rod Assembly	100141482
14	Pole Piece - Lower	100141485
15	Receptacle - Lower	100141486
16	Insulator - Lower	100041450

*Teflon is a trademark of E.I. Dupont De Nemours

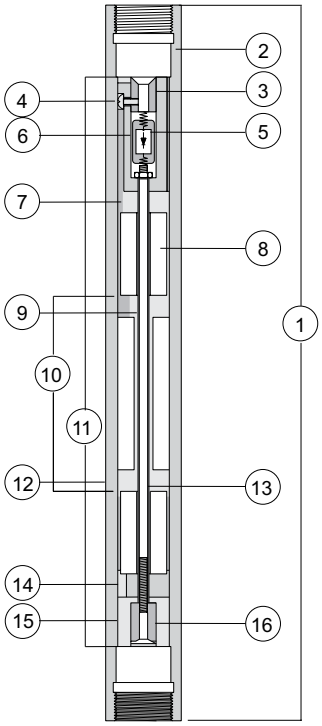

1 7/16-in. G Series CCL

1 11/16-in. CCL

Item	Description	Part No.
1	Complete Assembly	100141471
2	Sub - Top	100141472
3	Receptacle - Upper	100141409
4	Screw, Bind Head #6-32” x 3/16” L	100123576
5	Double Diode Assembly	100013295
6	O-ring - 568-216, 70D Viton	100125947
7	Washer - Flat, 0.498-in. OD x .260 in. I.D.	100000545
9	Shock Absorber - Top	100141455
10	Magnet Assembly - Top	100141452
11	Contact Rod	100141468
12	Coil Assembly	100141465
13	Coil and Magnet Assy w/Double Diode	100141466
14	Ground Ring	100141469
15	Magnet - Bottom	100141457
16	Tubing - 0.208-in. ID, Teflon	100161110
17	Housing	100141474
18	Shock Absorber - Bottom	100141456
19	O-ring, Viton 70 Duro #216	100125947
20	Receptacle - Lower	100141486
21	Sub - Bottom	100141473

*Teflon is a trademark of E.I. Dupont De Nemours

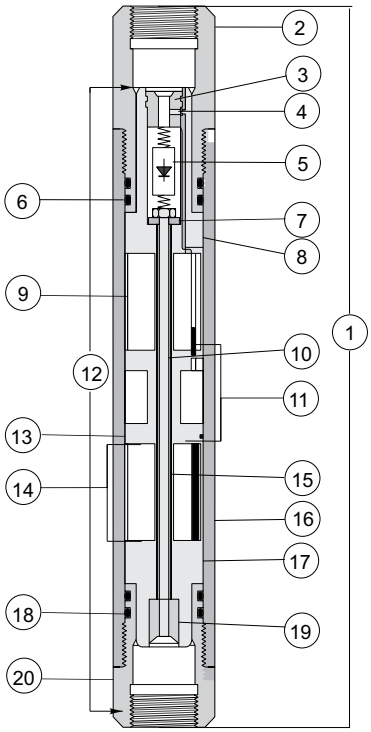

1 11/16-in. CCL

2 1/8-in. CCL

Item	Description	Part No.
1	Complete Assembly	100141446
2	Top Sub	100141441
3	Diode Holder	100141444
4	Receptacle - Upper, 1 $^{7}/_{16}$ in.	100141480
5	Screw - Rd Mach, #6-32NC x $^{1}/_{4}$ in.	100123608
6	Housing	100141448
7	Double Diode Assembly	100013295
8	O-ring, Viton 70 Duro #218	100125948
9	Shock Absorber	100083037
10	Pole Piece - Top	N/A
11	Magnet (2 req.)	100141457
12	Coil Assembly	100141445
13	Coil and Magnet Assy w/Double Diode	100141447
14	Ground Ring	100141450
15	Tubing - 0.208-in. ID, Teflon	100161110
16	Contact Rod Assembly	100141449
17	Pole Piece - Bottom	100141443
18	Insulator - Lower	100083038
19	Receptacle - Lower	100141486
20	Bottom Sub	100141442

*Teflon is a trademark of E.I. Dupont De Nemours

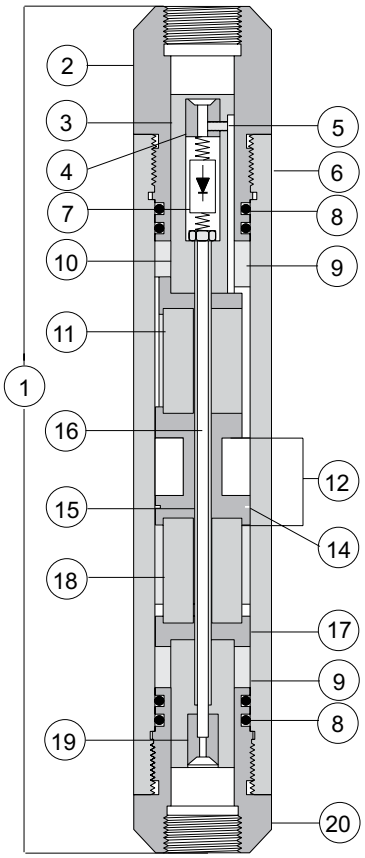

2 1/8-in. CCL

3 $^1/_4$-in. Casing Collar Locator/ GO® Quick Change

3 1/4-in. CCL

Item	Description	Part No.
1	Coil and Magnet Assembly	100004149
2	Top Sub	100141407
3	O-ring, Buna 90 Duro #229	100010653
4	Housing	100141408
5	Bottom Sub	100141414
6	Screw, Bind HD #6-32” x 3/16” D	100123576
7	Double Diode Assembly	100141421
8	Receptacle, Upper	100141409
9	Tubing 0.208” ID Teflon	100161110
10	Top Shock Absorber (Short Coil)	100141423
11	Nut, Magnet Sleeve Shooting CCL	100141412
12	Pole Piece - Shooting CCL	100141413
13	Contact Rod	100141417
14	Sleeve, Magnet - Shooting CCL	100141411
15	Magnet - Shooting CCL	100141410
16	Coil Assembly - Focused CCL	100141418
17	Washer-ZDG (Insulated)	100000545
18	Bottom Shock Absorber	100141424
19	Receptacle, Lower	100141486
20	Terminal Ring #4 12-10	100124728

*Teflon is a trademark of E.I. Dupont De Nemours

GO® Quick Change Head

Item	Description	Part No.
1	Contact Body Assembly	100142016
2	Sleeve, Quick Change	100142019
3	Detonator Block	100142020
4	Thread Protectors	101270189
5	O-Ring, 75 Duro #225	100125952
6	O-Ring, 75 Duro #222	100009488

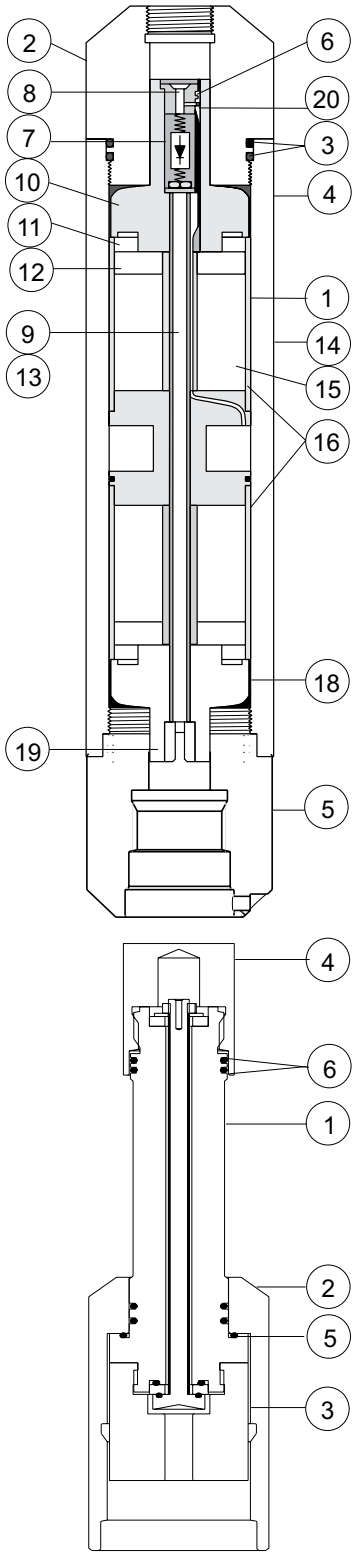

3 $^1/_4$-in. Casing Collar Locator/ GO® Quick Change

Lower Adapter Assy 3 1/4 in. GO® CCL to W Quick Change Assy

*Item	Description	Part No.
1	Adapter-Sub Assembly (Includes Items 2 and 3)	100010191
2	O-ring, Buna 90 Duro #229	100010653
3	Contact Kit	100010192

*For Use with 100141419

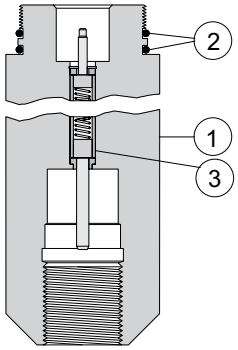

Lower Adapter Assy 3 1/4 in. GO® CCL to W Quick Change Assy

W Series CCL Quick-Change Assembly

*Item	Description	Part No.
1	Contact-Sub Assembly	100004295
2	Quick-Change Collar	100146315
3	Use 3.40256 No-Go Gauge to check for swelling after use	Reference
4	Thread Protector	100004291

*For Use with 100010191

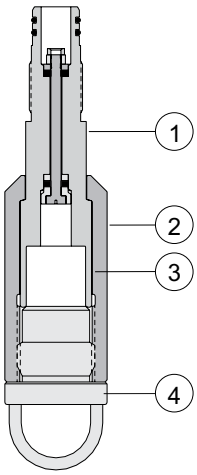

W Series CCL Quick-Change Assembly

W Series Adapter to VannGun™ 3 3/8 in. - 7 in. (Bottom Fire)

Item	Description	Part No.
1	Adapter Sub	100011568
2	O-ring, Buna 95 Duro #222	100000222

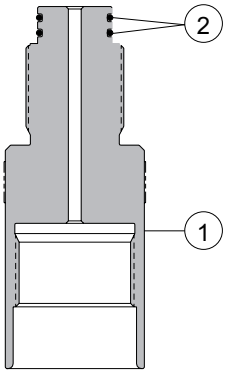

W Series Adapter to VannGun™ 3 3/8 in. - 7 in. (Bottom Fire)

1 $^{11}/_{16}$-in. Shock Sub-Assembly

Item	Description	Part No.
1	Complete Assembly	100137357
2	Mandrel - Drive	100137358
3	Insulator - Lower	100004150
4	Receptacle - Lower	100000899
5	Housing - Drive	100137359
6	Ring - Backup	100000908
7	O-ring, Viton 95 Duro #119	100000021
8	Spring - Grounding	100000207
9	O-ring, Viton 95 Duro #125	100000907
10	Pin - Torque	100137361
11	Housing	100000026
12	Washer - Silicon	100000022
13	Washer - Flat 1.295 x 0.940 x 0.090 in.,	100000905
	303 Stainless	
14	Key - Locking	100000905
15	Retainer - Key	100137360
16	Ring - Backup	100000910
17	O-ring , Viton 95 Duro #122	100000204
18	Mandrel - Upper	100000911
19	Tubing - Heat Shrink	100000148
20	Rod - Lower Contact	100000904
21	Spacer - Backup	100007619
22	Ring - Backup	100000909
23	O-ring, Viton 95 Duro #116	100000202
24	Insulator - Contact	100000901
25	Rod - Sliding Contact	100137348
26	Band - Contact, Large	100000493
27	Contact - Sliding	100000810
28	Insulator - Upper	100000903
29	O-ring, Viton 95 Duro #124	100000206
30	Housing - Upper	100137362
31	Rod - Upper Contact	100000902
32	O-ring, Viton 95 Duro #211	100000211
33	Connector - Banana Plug	100000497
34	Washer - Flat, #6	100000416
35	Insulator - Standard	100000812
36	Tubing - $^{3}/_{16}$-in. TFE	100004210
37	Plug - Bull	
38	Thread Protector	100142009
39	Insulator - Contact	100000912
40	O-ring, Viton 95 Duro #201	100000209
41	Washer - Shim 0.200 x 0.359 x 0.030 in.	100000023
	Stainless	

*Itemized in Drawing

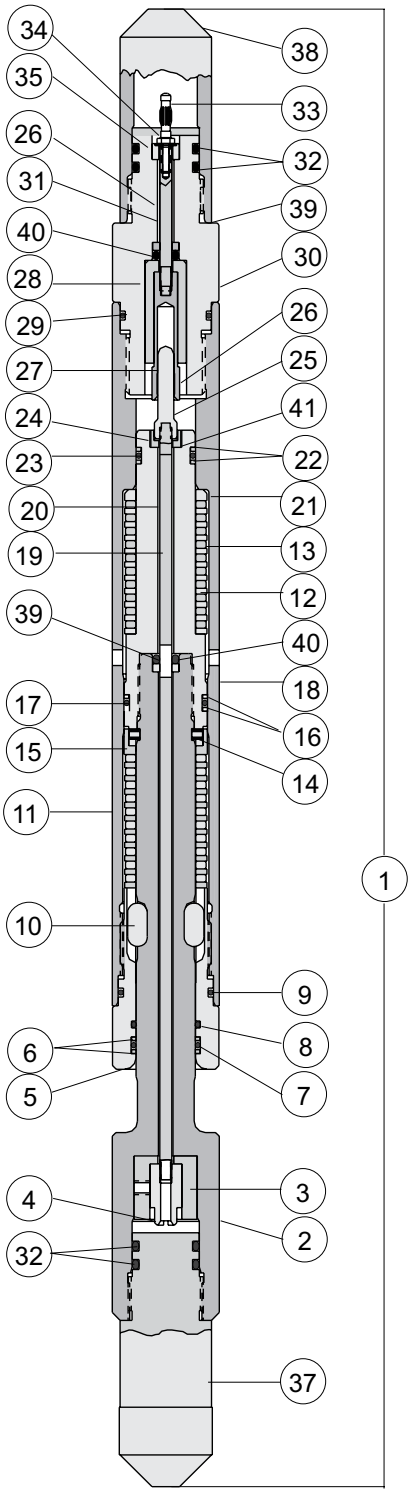

1 $^{11}/_{16}$-in. Shock Sub-Assembly

3 1/8-in. Shock Sub-Assembly

Item	Description	Part No.
*1	Complete Assembly	100134087
2	Thread Protector	100134073
3	Sliding Contact	100000810
4	Contact Band	
5	O-ring, Viton 95 Duro #222	100000222
6	Backup Ring	100135707
7	Upper Insulator	100010261
8	Metal Washer	100000864
9	Shock Element	100000863
10	Upper Mandrel	100134089
11	Backup Ring	100135708
12	O-ring, Viton 95 Duro #228	100000228
13	Collar - Wedge Retaining	100135703
14	Drive Collar	100135704
15	Backup Ring	100135709
16	O-ring, Viton 95 Duro #230	100000230
17	Drive Housing	100135705
18	Spring, Canted Coil	100135711
19	Drive Mandrel	100134090
20	Lower Receptacle	100141486
21	Lower Insulator	100000811
22	Housing	100134088
23	Wedge - Anti-Backoff	100135702
24	Tubing - 3/16-in. TFE	100004210
25	Contact Rod	100134092

*Available in 4 5/8 in. upon request

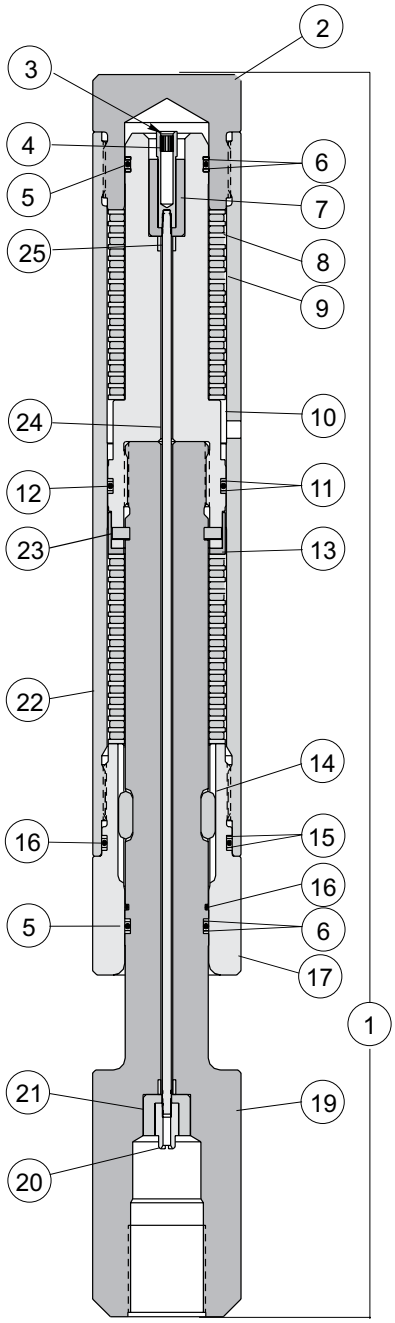

3 1/8-in. Shock Sub-Assembly

Backoff String Shot-Running Hardware

Item	Description	Part No.
1	Complete Assembly - 1 $^{7}/_{16}$ x 72 in.	100142583
2	Shooting Adapter	100141940
3	Jam Nut - $^{1}/_{2}$ in.-20	100161015
4	Backoff Rod - 72 in.	100142585
5	Bull Plug	100142584

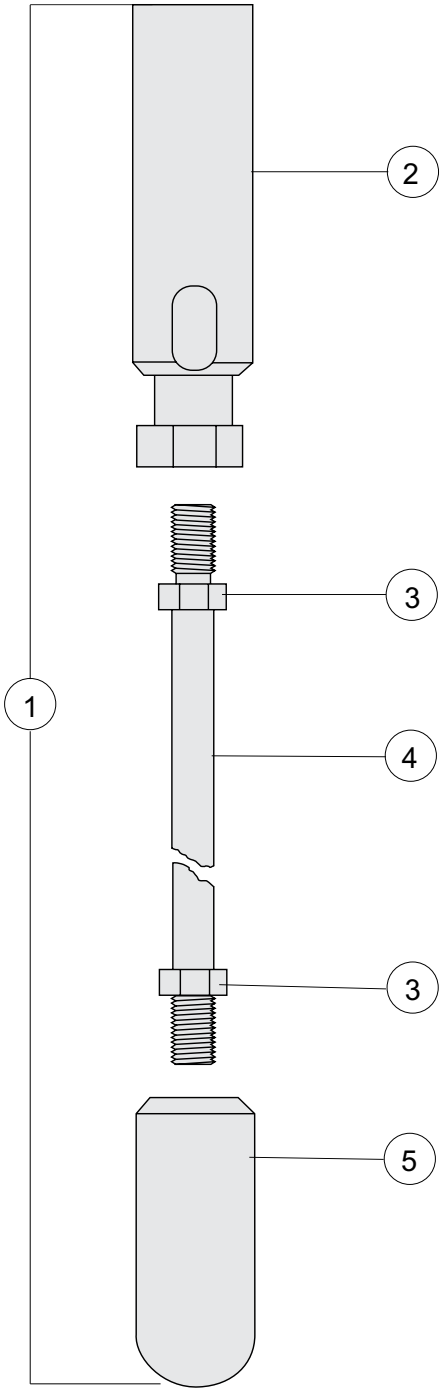

Backoff String Shot-Running Hardware

Junk Baskets - Gauge Rings

Item	Description	2 $^{3}/_{4}$-in.	3 $^{1}/_{2}$-in.	4-in.
1	Complete Assemblies	100010877	100160716	100160717
2	O-ring, Viton 95 Duro #222	100000222	100000222	100000222
3	Top Adapter	100010880	100010880	100010880
4	Valve Rod	100160719	100160719	100160719
5	Basket Section	101294580	101294581	100160718
	(Accepts Baker Gauge Ring No.)	(#10)	(#10)	(#20)
6	Set Screw - $^{5}/_{16}$ in. - 18	100010879	100010879	100010879
7	Optional Baker Gauge Ring	100010881	100010881	100118515
	Adapter (Adapts To Baker No.)	(#20)	(#20)	(#25)
8	Valve	101294582	101294582	101294582
9	Set Screw - $^{3}/_{8}$ in. - 16 x $^{1}/_{2}$ in.	100010879	100010879	100010879

Notes:
1. These Junk Baskets are compatible with Baker Oil Tools gauge rings as indicated on line Item 5.
2. Adapter rings are available to provide greater flexibility as indicated on Line Item 7.

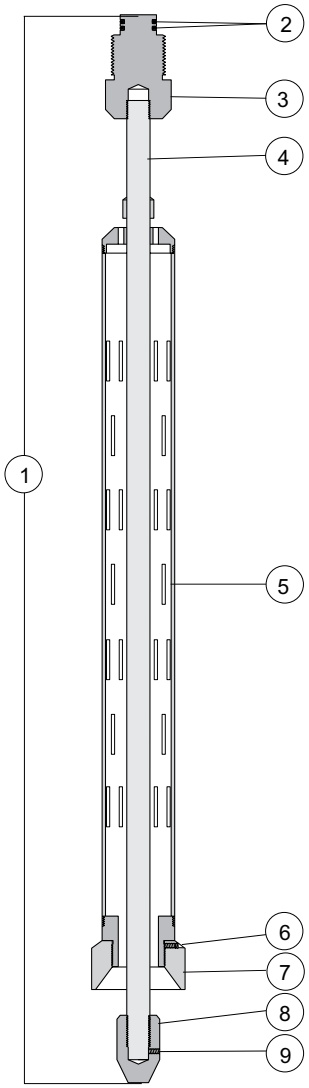

Junk Baskets - Gauge Rings

Jet Research Center offers a variety of field-proven, reliable plugs, setting tools, and associated equipment. Many of these products are in their first and second generation of development and have been improved to increase their efficiency and effectiveness. This section provides information concerning the following equipment:

- Elite Magna-Range Bridge Plug
- Dump Bailers

Elite Magna-Range Bridge Plug

The Elite Magna-Range Bridge Plug is a specialty plug designed to run through tubing or restricted pipe and set in the larger tubing or casing below the restricted interval. This capability saves considerable time and expense by eliminating the need to pull tubing to set a plug. Elite Magna-Range Plugs have many of the advanced design features of Elite cast-iron bridge plugs.

Features

- Runs through tubing to set in larger tubing or casting
- Winged cones guide the slips for even placement in casing
- One-piece slips virtually eliminate premature setting
- Improved setting characteristics
- Ratchet lock-ring secures dynamic setting force
- Rocker-action metal backup for three-piece packing element
- Applicable for high temperature and pressures

Benefits

- Saves time and expense

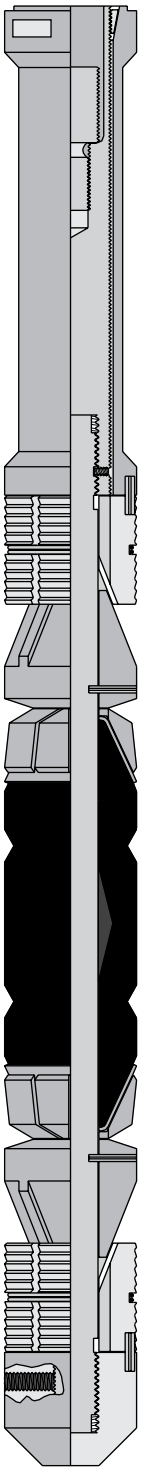

Elite Magna-Range Bridge Plug

Elite Magna-Range Bridge Plug

Setting Range (in)		Plug	Part No.	Setting	Adapter	Setting	Setting	Tool Style and
Min	Max	OD (in.)		Nut	Rod	Sleeve	Tool	OD (in.)
1.610	1.995	1.468	100013363	N/R	N/R	101223350	101223341	1 $^{3}/_{8}$ Multistage
						69673	100142901	1 $^{1}/_{2}$ Shorty
1.905	2.441	1.75	100013353	N/R	N/R	100142920	100162434	1 $^{11}/_{16}$ Long Stroke
2.156	2.765	1.906	100009713	N/R	N/R	100142920	100162434	1 $^{11}/_{16}$ Long Stroke
2.375	3	2.187	100013364	N/R	N/R	100142922	100162434	1 $^{11}/_{16}$ Long Stroke
2.441	3.343	2.281	100009714	N/R	N/R	100142922	100162434	1 $^{11}/_{16}$ Long Stroke
3.187	3.92	2.75	100071886	N/R	N/R	100142964	100001546	2 $^{1}/_{2}$ Shorty
3.437	4.154	3	100013365	N/R	N/R	100142964	100001546	2 $^{1}/_{2}$ Shorty

Through Tubing Dump Bailers

Item	Description	1 $^{11}/_{16}$-in.	2-in.
1	Contact Sub Assy	100013316	100013316
2	Boot - $^{1}/_{16}$-in. Wire Hole	100004173	100004173
3	Top Section - 10 ft	100118478	100010871
4	Extension Section - 5 ft	100118479	100118480
	Extension Section - 10 ft	100117089	100080802
5	O-ring - 90 Duro #568	100113868	101299267
6	Blast Sub	120021849	100133157
7	Bailer Bottom - Collar	120131667	100160560
8	Bottom Glass	100009853	100009904
9	Detonator	N/A	N/A
10	Detonator Weight	100142990	100142990
11	Grounding Spring	100000645	100000645
12	Lead Wire	100115507	100115507

See the Through Tubing Plugback Equipment Operation and Service Manual 100146437 for specialized mixing, pumping and bottom fill equipment not shown here.

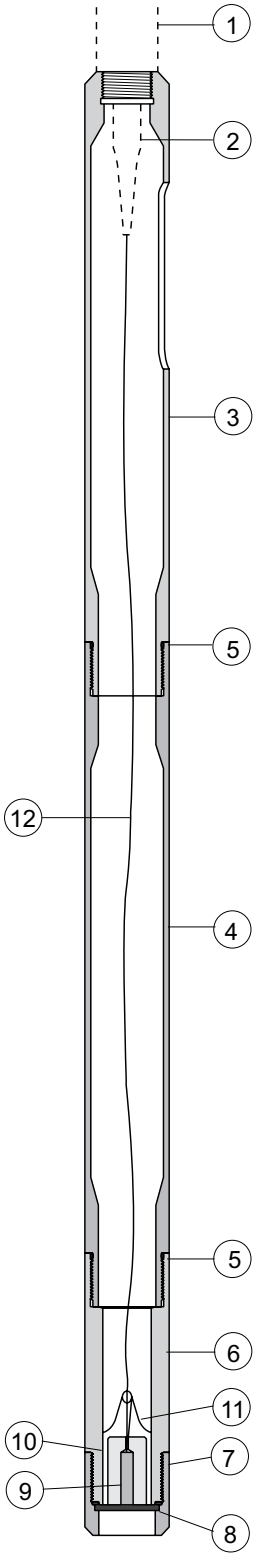

Through Tubing Dump Bailers

Casing Dump Bailers

Item	Description	3-in.	3 $^1/_2$-in.	4-in.	5-in.
1	Electrical Contact	100004162	100004162	100004162	100004162
2	Contact Retainer	100000615	100000615	100000615	100000615
3	O-ring - 95 Duro #568	100000222	100000222	100000222	100000222
4	Upper Spinning Collar Sub	100000442	100000442	100000442	100000442
5	Upper Spinning Collar	101299220	100000443	100000443	100000443
6	Boot - $^1/_{16}$-in. Wire Hole	100004173	100004173	100004173	100004173
7	Top Section - 10 ft	101299221	100000444	100118481	68605
8	Extension Section - 5 ft	101299223	100000445	100118482	68606
	Extension Section - 10 ft	101299224	100000446	100118483	68607
9	O-ring - 95 Duro	100114816	100010700	10000234	100114850
10	Blast Sub	101299225	100000447	100118484	68608
11	Bailer Bottom - Glass Type	101299226	100000448	68609	68610
12	Glass Disk	100010872	100000449	6841	6842
13	O-ring - 95 Duro	100000227	100000231	100000232	100000236
14	Detonator	N/A	N/A	N/A	N/A
15	Detonator Weight	100142990	100142990	100142990	100142990
16	Grounding Device	100000664	100000664	100000664	100000664
17	Lead Wire - 22 GA, *Teflon	100115507	100115507	100115507	100115507
18	Seizing Line - High-temp.	69150	69150	69150	69150

*Teflon is a trademark of E.I. Dupont De Nemours.

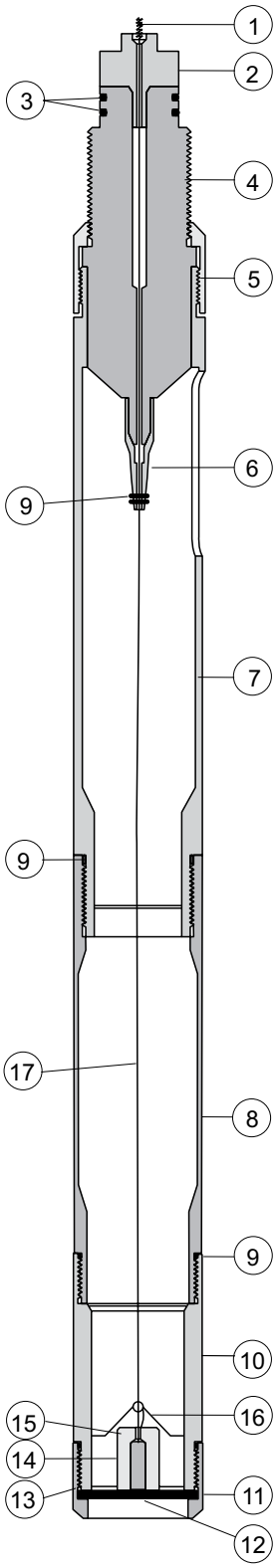

Casing Dump Bailers

Detonating Cords

RDX	40 GRAINS/FT FLAT, RIBBON
100000149	RDX 40 GRAINS/FT LS / NYLON JACKET - ENSIGN BICKFORD
101208988	RDX 40 GRAINS/FT LS / NYLON JACKET - ENSIGN BICKFORD - EB AIR PACK
HMX	40 GRAINS/FT FLAT, RIBBON
100000363	HMX 40 GRAINS/FT LS / NYLON JACKET - ENSIGN-BICKFORD
101205518	HMX 40 GRAINS/FT LS / NYLON JACKET - ENSIGN-BICKFORD - EB AIR PACK
HNS	40 GRAINS/FT FLAT, RIBBON
100000531	HNS 40 GRAINS/FT LEAD JACKET - ENSIGN-BICKFORD
2 $^{3}/_{4}$ in. – 7 in. Gun Systems	
RDX	
101001671	RDX 80 GRAIN LS/XHV – DETOTEC
100157035	RDX 80 GRAIN LS/XHV – DETOTEC – DETOTEC AIR PACK
100005339	RDX 80 GRAIN LS/XHV – ENSIGN-BICKFORD
100157022	RDX 80 GRAIN LS/XHV – ENSIGN-BICKFORD – EB AIR PACK
100157031	RDX 80 GRAIN LS/XHV – ENSIGN-BICKFORD – OWEN AIR PACK
HMX	
101001672	HMX 80 GRAIN LS/XHV – DETOTEC
100157037	HMX 80 GRAIN LS/XHV – DETOTEC – DETOTEC AIR PACK
100005338	HMX 80 GRAIN LS/XHV – ENSIGN-BICKFORD
100157024	HMX 80 GRAIN LS/XHV – ENSIGN-BICKFORD – EB AIR PACK
100156998	HMX 80 GRAIN LS/XHV – ENSIGN-BICKFORD – OWEN AIR PACK
PYX/HNS	
100005337	PYX 80 GRAIN LS – ENSIGN-BICKFORD
100157025	PYX 80 GRAIN LS – ENSIGN-BICKFORD – EB AIR PACK
100005317	PYX 80 GRAIN LS – ENSIGN-BICKFORD – OWEN AIR PACK
100157001	HNS 80 GRAIN LS – DYNAMIT NOBEL
100157000	HNS 80 GRAIN LS – DYNAMIT NOBEL – DYNAMIT NOBEL AIR PACK
Bi-Directional Boosters	
100008021	HMX BI-DIRECTIONAL BOOSTER - OWEN
100005314	PYX / NONA BI-DIRECTIONAL BOOSTER - OWEN
100157004	HNS BI-DIRECTIONAL BOOSTER - DYNAMIT NOBEL
Detonating Cord Initiators	
100005307	HMX DET CORD INITIATOR - JRC
100005309	NONA DET CORD INITIATOR - JRC

Deep-Star™ Recommendations

RDX: For conditions to 300 °F, 15,000, 1 hr.				
Manufacturer	Cord Type	Jacket	Part No.	Air Ship Part No.
Detotec	Low Shrink	Nylon	101001669	101340946
Ensign Bickford	Low Shrink	Nylon	100005308	100157019
Detotec	Low Shrink-XHV	Nylon	101001671	101340952
HMX: For conditions to 350 °F, 15,000, 1 hr.				
Manufacturer	Cord Type	Jacket	Part No.	Air Ship Part No.
Detotec	Low Shrink	Zytel	100157032	101340954
Detotec	Low Shrink-XHV	Zytel	101001672	101340955
Accurate Arms	Lead	Lead	100010620	100157211
HNS: For conditions to 450 °F, 15,000, 1 hr.				
Manufacturer	Cord Type	Jacket	Part No.	Air Ship Part No.
Accurate Arms	Lead	Lead	100010620	100157211

Bi-Directional Boosters

100008021	HMX BI-DIRECTIONAL BOOSTER - OWEN
100005314	PYX / NONA BI-DIRECTIONAL BOOSTER - OWEN
100157004	HNS BI-DIRECTIONAL BOOSTER - DYNAMIT NOBEL
101603801	7.0G HMX MAXFORCE™

Detonating Cord Initiators

100005307	HMX DET CORD INITIATOR - JRC
100005309	NONA DET CORD INITIATOR - JRC

MaxForce™ is Proprietary to Halliburton.

Steel Protectors

For a VannGun™ Firing Head Crossover Pin Thread

101272858	1 11/16	VannGun™ Firing Head Pin
100014411	2 3/4	VannGun Firing Head Pin
100014399	3 3/8	VannGun Firing Head Pin

For a VannGun™ Pin Thread

101282714	1 9/16	VannGun Pin
101282716	2	VannGun Pin
101282724	2 1/2	VannGun Pin
100014411	2 3/4	VannGun Pin
N/A	2 7/8	VannGun Pin
102182729	3 1/8	VannGun Pin
100014399	3 3/8	VannGun Pin
100014404	4	VannGun Pin
101207231	4 5/8	VannGun Pin
100157305	5	VannGun Pin
100157305	5 1/8	VannGun Pin
101279004	5 3/4	VannGun Pin
100157302	6	VannGun Pin
N/A	6 1/2	VannGun Pin
101282733	7	VannGun Pin

For a VannGun™ Box Thread (Vented)

102189271	1 11/16	VannGun Box
101289287	2	VannGun Box
101289288	2 1/2	VannGun Box
101284726	1/4 in. NPT Melt Plug for 2 1/2 in. and larger VannGuns	
101289289	2 3/4	VannGun Box
N/A	2 7/8	VannGun Box
101289291	3 1/8	VannGun Box
101287878	3 3/8	VannGun Box
N/A	4	VannGun Box
101287911	4 5/8	VannGun Box
101287905	5	VannGun Box
102187905	5 1/8	VannGun Box
N/A	5 3/4	VannGun Box
N/A	6	VannGun Box
N/A	6 1/2	VannGun Box
101287901	7	VannGun Box
101270234	3/4 in. NPT Melt Plug for 2 3/4 in. and larger VannGuns	

Tools

100008024	VannGun™ Spacer Kit - size PAI
100014389	VannGun™ Spacer Kit - size PAI
100005384	DC-4 O-ring Lubricant (>350 °F)
100026254	Dry Moly Thread Lubricant (350 °F)
100157361	LPS - A -151 Degreaser - 15 oz. aerosol
100157362	LPS - A -151 Degreaser - 1 oz. aerosol
100157363	LPS - A - 151 Degreaser - 5 oz.

Lift Sub Bushings

For a VannGun™ Firing Head		
101289612	1 11/16	VannGun™ Firing Head
100014393	2 3/4	VannGun™ Firing Head
100163437	3 3/8	VannGun™ Firing Head
For a VannGun™		
101274049	1 9/16	VannGun™
100014283	2	VannGun™
101274055	2 1/2	VannGun™
100014393	2 3/4	VannGun™
N/A	2 7/8	VannGun™
N/A	3 1/8	VannGun™
100163437	3 3/8	VannGun™
101292656	4	VannGun™
100156611	4 5/8	VannGun™
100156633	5	VannGun™
100156633	5 1/8	VannGun™
101288072	5 3/4	VannGun™
N/A	6	VannGun™
N/A	6 1/2	VannGun™
100156612	7	VannGun™
Tubing Lift Sub		
14833	2 3/8 in. EUE 8rd Tubing Lift Sub	
VannGun™ Support Plate Assemblies		
120042522	1 9/16	VannGun™
100155768	2	VannGun™
101226363	2 1/2	VannGun™
100156573	2 3/4	VannGun™
100153573	2 7/8	VannGun™
100156573	3 1/8	VannGun™
100156573	3 3/4	VannGun™
100156573	4	VannGun™
100156583	4 5/8	VannGun™
100156633	5	VannGun™
100156633	5 1/8	VannGun™
101288072	5 3/4	VannGun™
100156578	6	VannGun™
100456578	6 1/2	VannGun™
100156588	7	VannGun™

Miscellaneous	
100008024	VannGun™ Spacer Kit - size PAI
100014389	VannGun™ Spacer Kit - size PAI
100005384	DC-4 O-ring Lubricant (>350 °F)
100026254	Dry Moly Thread Lubricant (350 °F)
100157361	LPS - A -151 Degreaser - 15 oz. aerosol
100157362	LPS - A -151 Degreaser - 1 oz. aerosol
100157363	LPS - A - 151 Degreaser - 5 oz.

Gun Support Assemblies

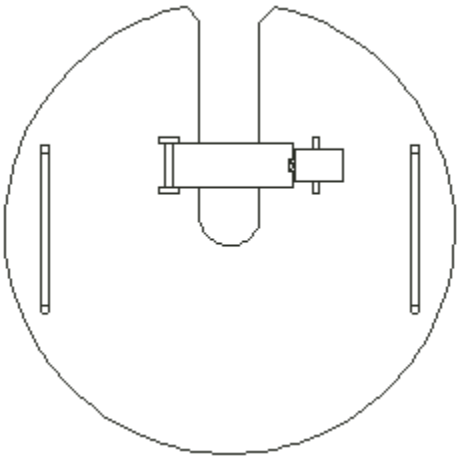

1 9/16 in.	VannGun™	120042522
2.00 in.	VannGun™	100155768
2 1/2 in.	VannGun™	101226363

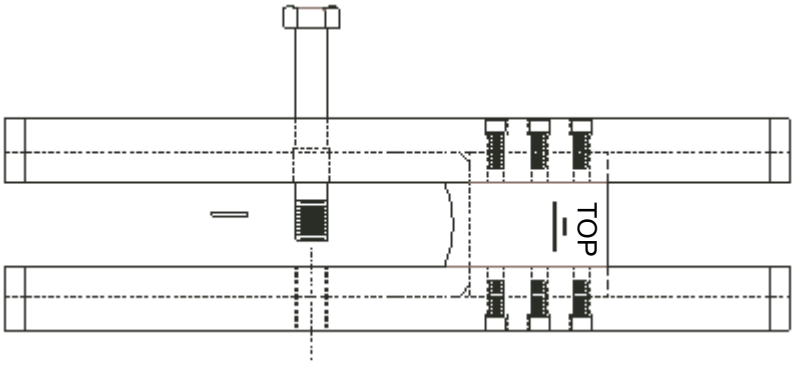

2 3/4 in.	VannGun™	100156573
3 1/8 in.	VannGun™	100156573
3 3/8 in.	VannGun™	100156573
4 in.	VannGun™	N/A
4 5/8 in.	VannGun™	100156583
5 in.	VannGun™	101016456
5 1/8 in.	VannGun™	101016456
5 3/4 in.	VannGun™	101016456
6 in.	VannGun™	100156578
6 1/2 in.	VannGun™	100156578
7 in.	VannGun™	100156588

Charge Clips and Associated Tools

Charge Clip
P/N - 100005336

Charge Clip
P/N - 100156506

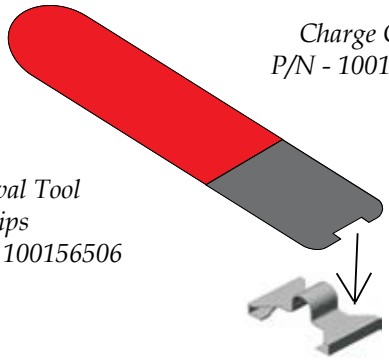

Installation/Removal Tool
for Charge Clips
P/N's 100005336 and 100156506

Charge Clip
P/N - 100005477

Charge Clip
P/N - 100157866

Deep-Star ™ Charge Clip
P/N - 100157947

OMNI™ Charge Clip
P/N - 100005250

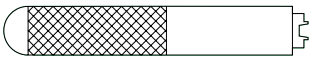

Installation Tool for
Deep-Star™ Charge Clip
P/N - 100009586

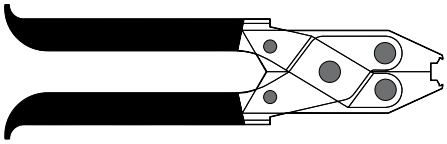

Removal Tool for
Deep-Star™ Charge Clip
P/N - 100009585

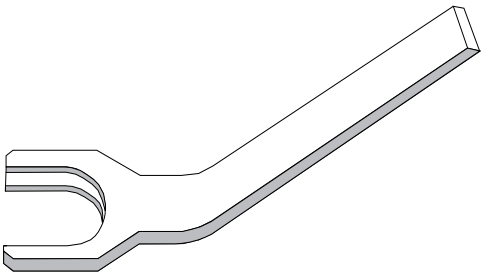

OMNI™ Charge Downloading Tool
P/N - 100157374

Bi-Directional Booster Transfer Kit

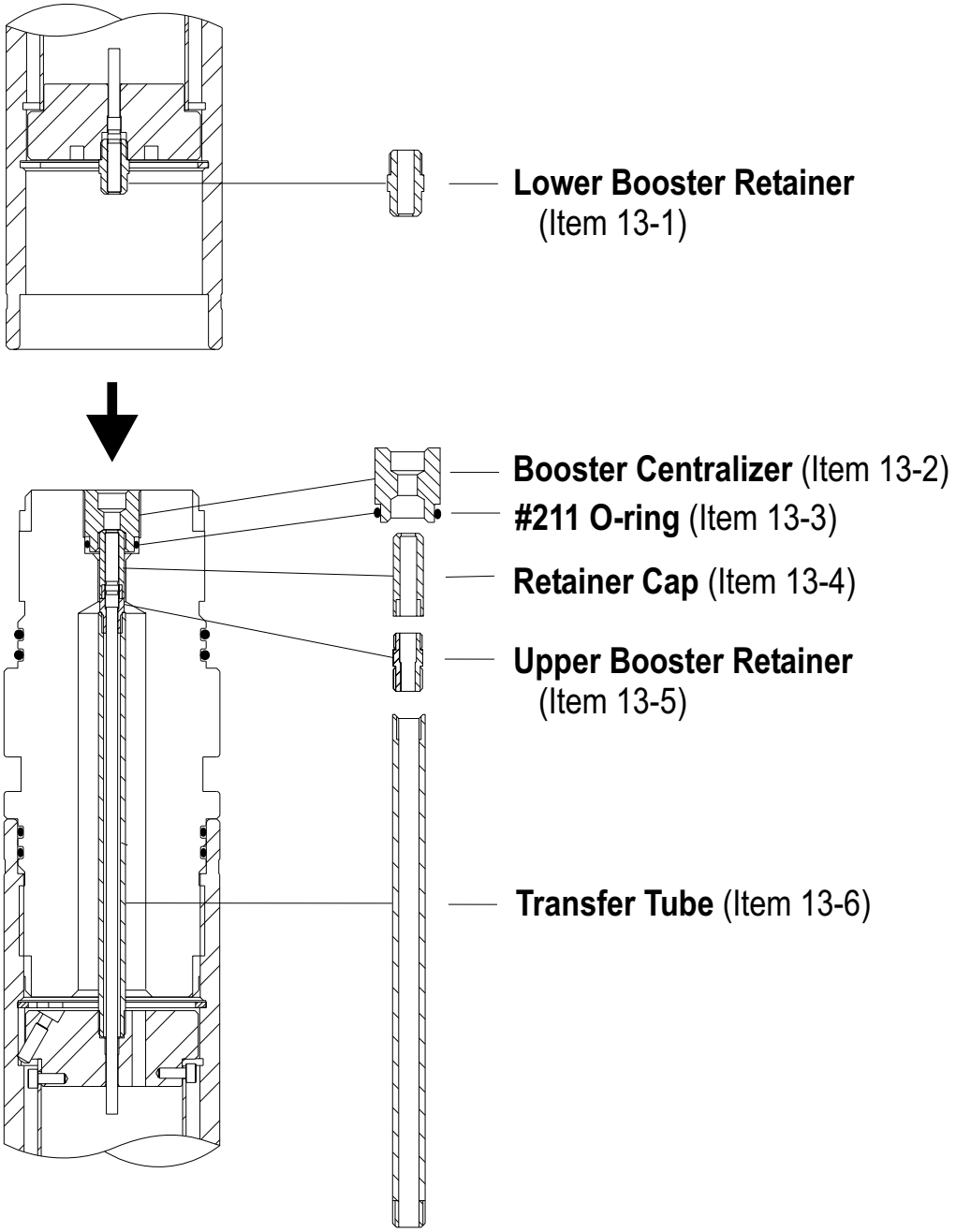

Gun Swell Information

GUN					CHARGE		TEST RESULTS	
O.D.	Shots per ft.	Shot Phase (Deg)	Material CR / HF	Wall Thk (In.)	Type	Explosive Wt. (gms)	Tested In Air/Water	Max Swell (In.)
1 9/16	6	60	CR	.171	Millennium™	3.40	water	1.760
	6	0	CR	.171	Millennium	3.40	water	1.680
2	4	0	CR	.215	SDP	6.75	water	2.166
	6	60	CR	.215	SDP	6.75	water	2.221
	6	60	CR	.215	Millennium	6.80	water	2.225
2 1/2	6	60	CR	.250	DP	11.00	water	2.676
2 3/4	4	22 LS	CR	.312	DP LD	13.00	water	2.781
	5	180	CR	.312	SDP	14.70	water	2.971
	5	180	CR	.312	DP LD	12.50	water	2.810
	6	60	CR	.312	DP	12.50	water	2.835
	6	60	CR	.312	DP	12.50	air	2.867
	6	60	CR	.312	DP	12.50	water	2.853
	6	60	CR	.312	DP LD	13.00	water	2.893
	6	60	CR	.312	BH	14.70	water	2.850
	6	60	HF	.312	SDP	14.70	water	2.954
	6	60 LS	CR	.312	DP	12.50	water	2.819
	6	60 LS	CR	.312	DP	12.50	air	2.821
	6	60 LS	CR	.312	Millennium	15.00	water	2.915
2 7/8	6	60	CR	.312	Millennium	15.00	water	3.047
3 3/8	4	60	CR	.375	DP	32.00	air	3.676
	4	60	HF	.375	DP	32.00	water	3.592
	4	90	CR	.375	SDP	25.00	air	3.524
	4	90	HF	.375	DP	32.00	water	3.555
	4	180	CR	.375	SDP	25.00	water	3.546
	4	40 LS	HF	.375	SDP	25.00	air	3.533
	6	60	CR	.375	DP LD	23.00	water	3.608
	6	60	CR	.375	SDP	25.00	water	3.600
	6	60	CR	.375	DP	22.00	air	3.599
	6	60	CR	.375	SDP LD	25.00	water	3.615
	6	60	HF	.375	DP LD	22.70	water	3.618
	6	60	HF	.375	DP	26.00	water	3.625
	6	60 LS	HF	.375	SDP	25.00	water	3.600
	6	60 LS	CR	.375	DP	26.00	air	3.614
	8	180	CR	.375	BH	14.00	water	3.458
	12	150	CR	.375	BH	14.75	water	3.520
	12	150	HF	.375	BH LD	14.00	water	3.538
	12	150	HF	.375	BH	14.00	water	3.568
4	4	90	HF	.375	Millennium	39.00	water	4.260
	5	60	HF	.375	Millennium	39.00	water	4.864
4 1/2	5	60	HF	.375	Millennium	39.00	water	4.864
4 5/8	5	72	CR	.438	SDP	39.00	air	4.780
4 5/8	5	135	HF	.438	SH	56.50	water	4.904

Gun Swell Information

GUN					CHARGE		TEST RESULTS	
O.D.	Shots per ft.	Shot Phase (Deg)	Material CR / HF	Wall Thk (In.)	Type	Explosive Wt. (gms)	Tested In Air/Water	Max Swell (In.)
4 5/8	6	60	CR	.438	DP	32.00	air	4.876
4 5/8	6	60	HF	.438	DP	32.00	water	4.806
4 5/8	8	180	CR	.438	SH	28.00	water	4.770
4 5/8	8	180	CR	.438	DP LD	23.00	air	4.860
4 5/8	8	180	CR	.438	DP LD	23.00	water	4.780
4 5/8	12	150	CR	.438	BH LD	22.70	water	4.815
4 5/8	12	150	CR	.438	DP	23.00	water	4.834
4 5/8	12	150	CR	.438	DP LD	22.70	water	4.925
4 5/8	12	150	HF	.438	BH LD	22.70	water	4.840
4 5/8	12	150	HF	.438	BH	28.00	water	4.813
4 5/8	12	150	HF	.438	DP	23.00	water	4.959
4 5/8	12	150	HF	.438	DP LD	23.00	water	5.050
4 5/8	12	150	HF	.438	DP LD	23.00	water	5.044
4 5/8	12	150	HF	.438	SH LD	28.00	water	4.895
4 5/8	12	150	CR	.438	SH	28.00	water	4.727
4 5/8	12	150	CR	.438	SH LD	28.00	water	4.846
4 5/8	14	135	CR	.438	SH	28.00	water	4.790
5	12	235	CR	.437	SH	28.00	water	5.196
5	14	231	CR	.437	SH	28.00	water	5.207
5	14	231	CR	.437	SH LD	28.00	water	5.304
5	18	60/120	CR	.437	SH	28.00	water	5.229
5 1/8	6	135	CR	.438	SH	56.50	air	5.413
5 1/8	12	150	CR	.438	BH LD	22.70	water	5.210
5 1/8	14	135	CR	.438	SH	32.00	water	5.380
5 1/8	21	60/120	CR	.438	BH	23.00	water	5.224
5 3/4	14	231	CR	.500	SH	32.00	water	5.804
5 3/4	14	231	CR	.500	SH LD	34.00	water	5.945
6 1/2	14	138	CR	.500	SH LD	56.5	water	6.680
7	12	135	CR	.500	SH LD	56.50	water	7.125

Notes:

1. The above chart was taken from actual tests conducted by JRC Engineering on RDX and HMX charges. It can be used as a general guideline for all explosives. If you have questions regarding these systems, or systems that are not listed, please contact JRC Engineering.
2. All tests were conducted at ambient temperature and pressure.

O-Ring Selection Chart

	100°F	325°F	350°F	400°F	500°F
Calcium Bromide	5,3,4	5,3,4	5	5	
Carbon Dioxide	1,2,3,4,5	3,4	4,5	5	
Hydrochloric Acid	3,4,5	3,4,5	4,5	5	
Hydroflouric Acid	5	5	5	5	
Hydrogen Sulfide	5,4	5	5	5	
Potassium	1,2,3,4,5	3,4,5	4,5	5	
Sodium Chloride	1,2,3,4,5	3,4,5	4,5	5	
Sodium Bromide	5,3,4	5,3,4	5	5	
Zinc Bromide	5,3,4	5,3,4	5	5	
Hydrocarbons	1,2,3,4	3,4	4,5	5	

1. Nitrile (Packer-N-1059-90 or National C-67)
2. Nitrile (Packer-N-1059-90 or National C-67 w/Engineering Spec. backups)
3. Viton (National V-25)
4. Viton with Backups (National V-25 w/Engineering Spec. backups)
5. Aflas with Backups (Engineering Spec. on both)

Notes:

1. When more than one choice exists in a box, the choices are listed in order of decreasing preference.
2. If a number appears in any row in any temperature range, it will also be an acceptable choice for any temperature range lower than the one in which it appears in that row. It will not, however, be the preferred choice.
3. Backup rings should **always** be used if well pressures are to exceed 13,000 psi.

Time Vs. Temperature Chart

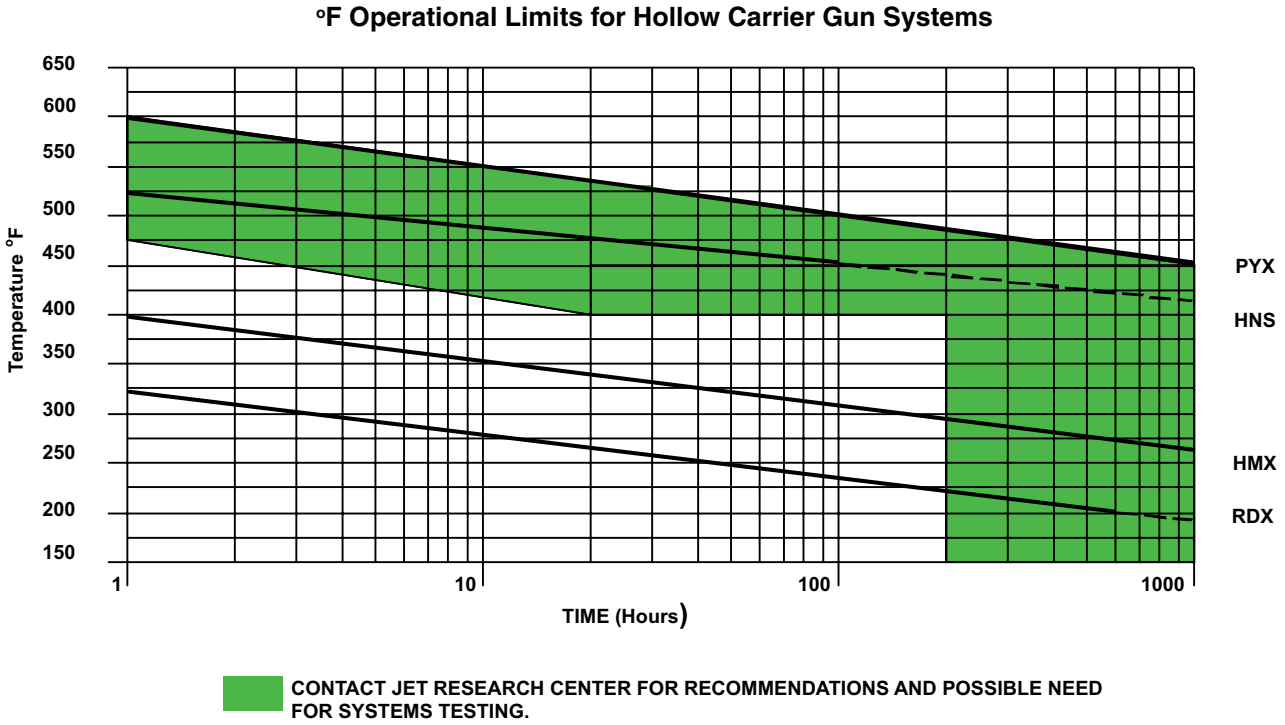

Notes:

1. This chart is valid for the explosive train inside Hollow Carrier Guns only: Non-Electric Boosters, Detonating Cord, and Shaped Charges.
2. It is not valid for TCP Firing Systems, Electric Detonators, or Capsule Guns.
3. Contact JRC for information regarding these other components.

Time Vs. Temperature Chart

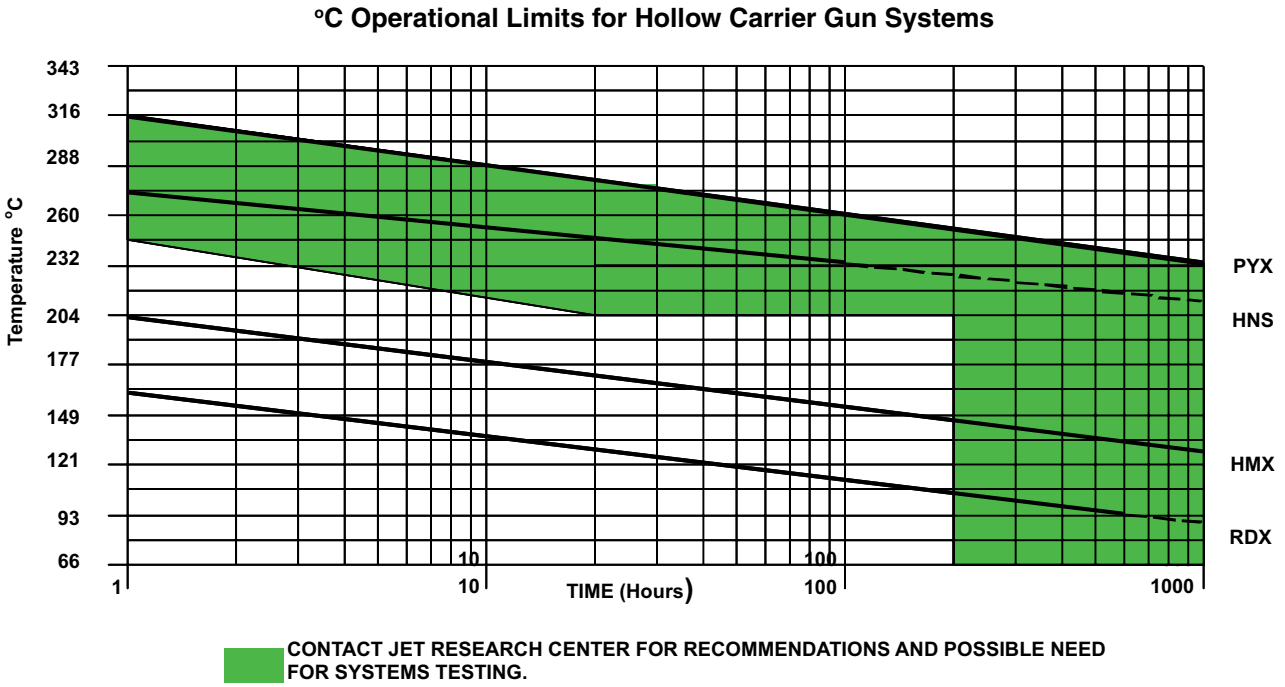

Notes:

1. This chart is valid for the explosive train inside Hollow Carrier Guns only: Non-Electric Boosters, Detonating Cord, and Shaped Charges.
2. It is not valid for TCP Firing Systems, Electric Detonators, or Capsule Guns.
3. Contact JRC for information regarding these other components