TECHNICAL SERVICE MANUAL: INSTALLATION, OPERATION & MAINTENANCE

VIKING PUMP®

UNIVERSAL PRODUCT LINE: *STAINLESS STEEL*
724 SERIES™, 4724 SERIES™
SIZES: F, FH, G, H, HL, K, KK, L, LQ, LL

TABLE OF CONTENTS

MODEL NUMBER CHART

Packed	Mechanical Seal
F724	F4724
FH724	FH4724
G724	G4724
H724	H4724
HL724	HL4724
K724	K4724
KK724	KK4724
L724	L4724
LQ724	LQ4724
LL724	LL4724

INTRODUCTION

The illustrations used in this manual are for identification purposes only and cannot be used for ordering parts. Obtain a parts list from your Viking Pump® representative. Always give a complete name of part, part number and material with the model number and serial number of pump when ordering repair parts. The unmounted pump or pump unit model number and serial number are on the nameplate. This manual only applies to the pump models specified in the **"Model Number Chart" on page 1**. Pump specifications and recommendations are listed in the Catalog Sections, which are available at vikingpump.com.

FIGURE 1: F, FH, G SIZES

FIGURE 2: H, HL, K, KK, L, LQ, LL

SAFETY INFORMATION & INSTRUCTIONS

IMPROPER INSTALLATION, OPERATION OR MAINTENANCE OF PUMP MAY CAUSE SERIOUS INJURY OR DEATH, AND/OR RESULT IN DAMAGE TO PUMP AND/OR OTHER EQUIPMENT. VIKING'S WARRANTY DOES NOT COVER FAILURE DUE TO IMPROPER INSTALLATION, OPERATION OR MAINTENANCE.

THIS INFORMATION MUST BE FULLY READ BEFORE BEGINNING INSTALLATION, OPERATION OR MAINTENANCE OF PUMP, AND MUST BE KEPT WITH PUMP. PUMP MUST BE INSTALLED, OPERATED AND MAINTAINED ONLY BY SUITABLY TRAINED AND QUALIFIED PERSONS.

THE FOLLOWING SAFETY INSTRUCTIONS MUST BE FOLLOWED AND ADHERED TO AT ALL TIMES.

⚠ **DANGER = FAILURE TO FOLLOW THE INDICATED INSTRUCTION MAY RESULT IN SERIOUS INJURY OR DEATH.**

⚠ **WARNING = IN ADDITION TO SERIOUS INJURY OR DEATH, FAILURE TO FOLLOW THE INDICATED INSTRUCTION MAY CAUSE DAMAGE TO PUMP AND/OR OTHER EQUIPMENT**

⚠ DANGER

BEFORE opening any liquid chamber (pumping chamber, reservoir, relief valve adjusting cap fitting, etc.) be sure that:

- Any pressure in the chamber has been completely vented through the suction or discharge lines or other appropriate openings or connections.
- The pump drive system (motor, turbine, engine, etc.) has been "locked out" or otherwise been made non-operational, so that it cannot be started while work is being done on the pump.
- You know what material the pump has been handling, have obtained a material safety data sheet (MSDS) for the material, and understand and follow all precautions appropriate for the safe handling of the material.

⚠ DANGER

BEFORE operating the pump, be sure all drive guards are in place.

⚠ DANGER

DO NOT operate pump if the suction or discharge piping is not connected.

⚠ DANGER

DO NOT place fingers into the pumping chamber, or its connection ports, or into any part of the drive train if there is any possibility of the pump shaft being rotated.

⚠ WARNING

DO NOT exceed the pumps rated pressure, speed, and temperature, or change the system/duty parameters from those the pump was originally supplied, without confirming its suitability for the new service.

⚠ WARNING

BEFORE operating the pump, be sure that:

- It is clean and free from debris.
- All valves in the suction and discharge pipelines are fully opened.
- All piping connected to the pump is fully supported and correctly aligned with the pump.
- Pump rotation is correct for the desired direction of flow.

⚠ WARNING

INSTALL pressure gauges/sensors next to the pump suction and discharge connections to monitor pressures.

⚠ WARNING

USE extreme caution when lifting the pump. Suitable lifting devices should be used when appropriate. Lifting eyes installed on the pump must be used only to lift the pump, not the pump with drive and/or base plate. If the pump is mounted on a base plate, the base plate must be used for all lifting purposes. If slings are used for lifting, they must be safely and securely attached. For weight of the pump alone (which does not include the drive and/or base plate) refer to the Viking Pump® product catalog.

⚠ DANGER

DO NOT attempt to dismantle a pressure relief valve that has not had the spring pressure relieved or is mounted on a pump that is operating.

⚠ DANGER

AVOID contact with hot areas of the pump and/or drive. Certain operating conditions, temperature control devices (jackets, heat-tracing, etc.), improper installation, improper operation, and improper maintenance can all cause high temperatures on the pump and/or drive.

⚠ WARNING

THE PUMP must be provided with pressure protection. This may be provided through a relief valve mounted directly on the pump, an in-line pressure relief valve, a torque limiting device, or a rupture disk. If pump rotation may be reversed during operation, pressure protection must be provided on both sides of pump. Relief valve adjusting screw caps must always point towards suction side of the pump. If pump rotation is reversed, position of the relief valve must be changed. Pressure relief valves cannot be used to control pump flow or regulate discharge pressure. For additional information, refer to **Appendix**, **General Installation Notes**, item 5 on Pressure Protection or contact your Viking Pump® representative for Engineering Service Bulletin ESB-31.

⚠ WARNING

THE PUMP must be installed in a manner that allows safe access for routine maintenance and for inspection during operation to check for leakage and monitor pump operation.

SPECIAL INFORMATION

ROTATION

Viking pumps can operate equally well in a clockwise or counter-clockwise rotation. Shaft rotation determines which port is suction and which is discharge. Suction port is where pumping elements (gear teeth) come out of mesh.

PRESSURE RELIEF VALVES

1. Viking pumps are positive displacement pumps and must be provided with some sort of pressure protection. This may be a relief valve mounted directly on the pump, an inline pressure relief valve, a torque limiting device or a rupture disk.
2. There are relief valve options available on those pump models designed to accept a relief valve.

   G, H, HL, K, KK, L, LQ, LL Sizes Only: Options may include a return to tank relief valve and a jacketed relief valve. Pumps equipped with a jacketed head plate are not available with a relief valve.
3. If pump rotation is reversed during operation, pressure protection must be provided on ***both*** sides of pump.
4. Relief valve adjusting screw cap must ***always*** point towards suction side of pump, see **"Figure 3" on page 3**. If pump rotation is reversed, remove pressure relief valve and turn end for end.
5. Pressure relief valves cannot be used to control pump flow or regulate discharge pressure.

For additional information on pressure relief valves, Refer to **Appendix**, **General Installation Notes**, item 5 on Pressure Protection or contact your Viking Pump® representative for Engineering Service Bulletin ESB-31.

FIGURE 3: RELIEF VALVE POSITION (NOT REPRESENTATIVE OF G SIZE PUMPS)

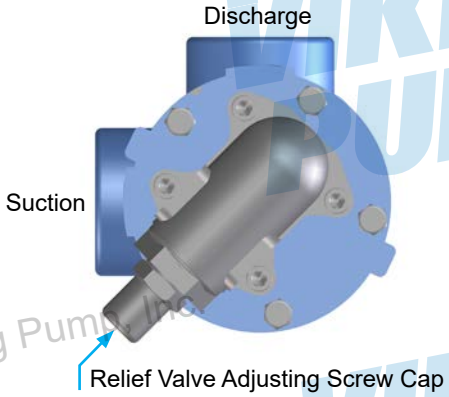

MAINTENANCE

These pumps are designed for long, trouble-free service life under a wide variety of application conditions with minimum maintenance. The points listed below will help provide long service life.

LUBRICATION

External lubrication must be applied slowly with a hand gun to all lubrication fittings every 500 hours of operation with multi-purpose grease, NLGI # 2. Contact your Viking Pump® representative with specific lubrication questions. **Engineering Service Bulletin ESB-515** is located in the **Appendix** for standard grease thickener types used by Viking to check compatibility. Applications involving very high or low temperatures will require other types of lubrication.

PACKING ADJUSTMENT

New packed pumps require initial packing adjustment to control leakage as packing "runs in". Make initial adjustments carefully and do not over-tighten packing gland. After initial adjustment, inspection will reveal need for packing gland adjustment or packing replacement. Contact your Viking Pump® representative for Engineering Service Bulletin ESB-521 regarding repacking pump.

END CLEARANCE ADJUSTMENT

After long term operation, it is sometimes possible to improve the performance of the pump, without major repair, through adjustment of end clearance of the pump. Refer to instructions under **"Thrust Bearing Adjustment" on page 10** for information regarding this procedure.

CLEANING PUMP

Keep pump as clean as possible. This will facilitate inspection, adjustment and repair work and help prevent overlooking a dirt covered grease fitting.

STORAGE

If pump is to be stored, or not used for any appreciable length of time, pump must be drained and a light coat of non-detergent SAE 30 weight oil must be applied to all internal pump parts. Lubricate fittings and apply grease to pump shaft extension. Viking suggests rotating pump shaft by hand one complete revolution every 30 days to circulate the oil.

SUGGESTED REPAIR TOOLS

The following tools must be available to properly repair these pumps. These tools are in addition to standard mechanics' tools such as open-end wrenches, pliers, screwdrivers, etc. Most of the items can be obtained from an industrial supply house.

1. Soft Headed hammer
2. Allen wrenches (some mechanical seals and set collars)
3. Packing hooks, flexible (packed pumps)
   2-810-049-999 - 1/4"; H-HL pumps
   2-810-042-999 - 3/8" and larger; K-LL pumps
4. Mechanical seal installation sleeve
5. Bearing locknut spanner wrench
   2-810-043-375; F-G pumps
   2-410-044-375; H-LL pumps
6. Spanner wrench, adjustable pin type for use on double end caps - 2-810-008-375
7. Brass bar
8. Arbor press

Contact your Authorized Viking Pump® stocking distributor for available seal and rebuild kits

FIGURE 4: EXPLODED VIEW (F, FH, G SIZES)

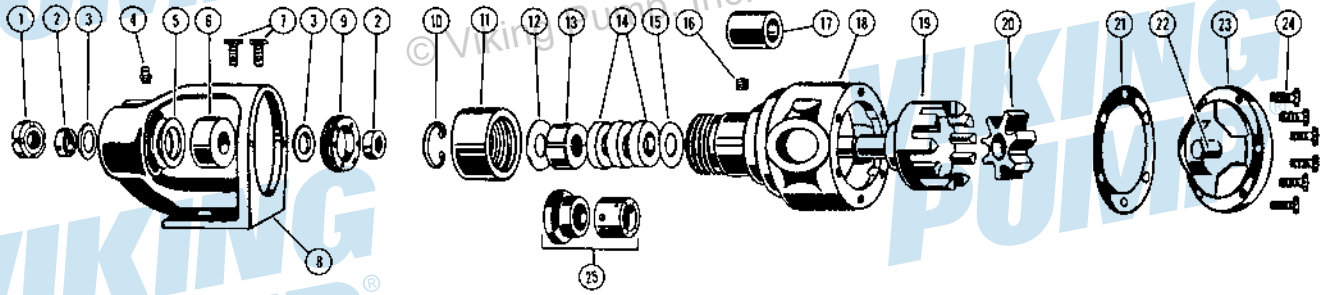

Item	Name Of Part	Item	Name Of Part	Item	Name Of Part
1	Nut, Self Locking	10	Internal Retaining Ring	19	Rotor and Shaft
2	Collar, Bearing Spacer (2)	11	Nut, Packing Gland	20	Idler
3	Lipseal (2)	12	Washer, Packing Gland Retainer	21	Gasket, Head
4	Grease Fitting	13	Packing Gland, Split	22	Idler Pin
5	Conical Spring Washer (2)	14	Packing	23	Head
6	Ball Bearing, 2 Row Plain	15	Washer, Packing Retainer	24	Capscrews, Head (6)
7	Capscrew, Bracket (2)	16	Pipe Plug, 1/8”	25	Mechanical Seal (4724 Series™)
8	Bracket	17	Bushing, Casing	37	Internal Relief Valve (G Size Only) (not shown)
9	End Cap, Bearing Housing	18	Casing		

Contact your Authorized Viking Pump® stocking distributor for available seal and rebuild kits

FIGURE 5: EXPLODED VIEW - 724 SERIES™ (H, HL, K, KK, L, LQ, LL SIZES)

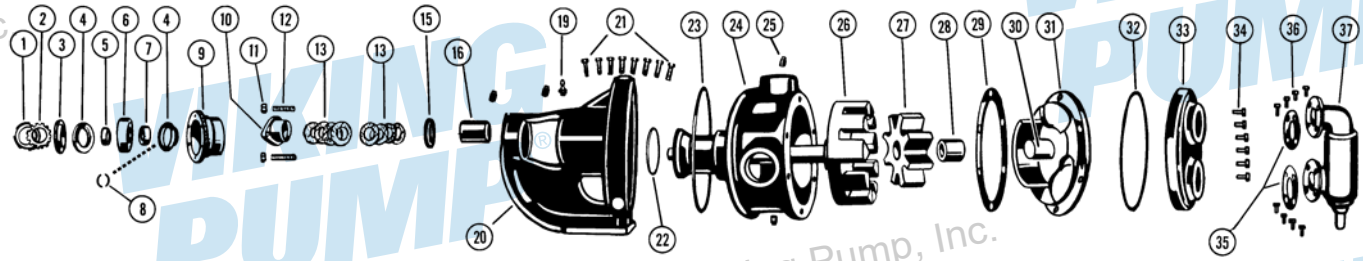

Item	Name Of Part	Item	Name Of Part	Item	Name Of Part
1	Locknut	13	Packing	28	Idler Bushing
2	Lockwasher	15	Packing Retainer Washer	29	Head Gasket
3	End Cap for Bearing Housing	16	Casing Bushing	30	Idler Pin
4	Lipseal Bearing Housing	19	Grease Fitting	31	Head and Idler Pin Assembly
5	Bearing Spacer Collar	20	Bracket	32	O-ring for Jacket Head Plate
6	Ball Bearing	21	Capscrews for Bracket	33	Jacket Head Plate
7	Bearing Spacer Collar, Recessed	22	O-ring for Casing Stem	34	Capscrews for Head
8	Half Round Rings	23	Back Flange O-ring	35	Relief Valve Gaskets
9	Bearing Housing with Setscrews	24	Casing	36	Capscrews for Valve
10	Packing Gland	25	Pipe Plug	37	Internal Relief Valve
11	Packing Gland Nut	26	Rotor and Shaft Assembly		
12	Packing Gland Capscrew (Studs on Q & M)	27	Idler and Bushing Assembly		

FIGURE 6: EXPLODED VIEW - 4724 SERIES™ (H, HL, K, KK, L, LQ, LL SIZES)

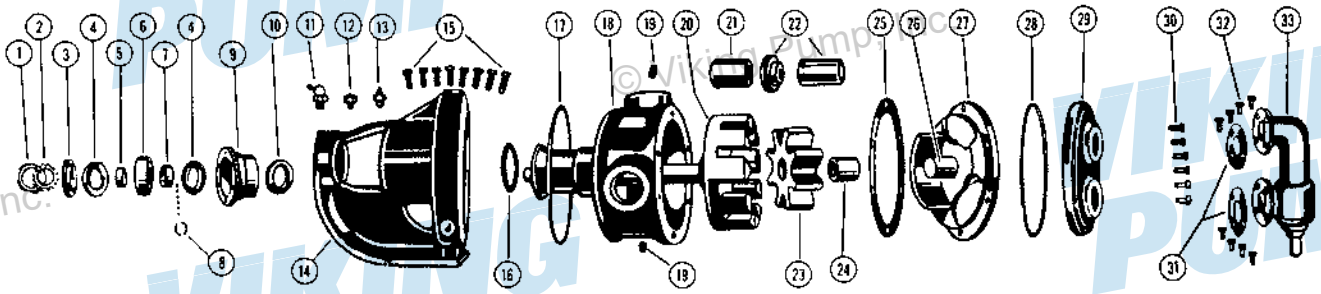

Item	Name Of Part	Item	Name Of Part	Item	Name Of Part
1	Locknut	12	Pressure Relief Plug	23	Idler and Bushing Assembly
2	Lockwasher	13	Grease Fitting	24	Idler Bushing
3	End Cap for Bearing Housing	14	Bracket	25	Head Gasket
4	Lipseal Bearing Housing	15	Capscrews for Bracket	26	Idler Pin
5	Bearing Spacer Collar	16	O-ring for Casing Stem	27	Head and Idler Pin Assembly
6	Ball Bearing	17	Back Flange O-ring	28	O-ring for Jacket Head Plate
7	Bearing Spacer Collar, Recessed	18	Casing	29	Jacket Head Plate
8	Half Round Rings	19	Pipe Plug	30	Capscrews for Head
9	Bearing Housing with Setscrews	20	Rotor and Shaft Assembly	31	Relief Valve Gaskets
10	Lipseal for Seal Chamber	21	Casing Bushing	32	Capscrews for Valve
11	Grease Fitting (Angle)	22	Mechanical Seal	33	Internal Relief Valve

⚠ DANGER !

Before opening any Viking pump liquid chamber (pumping chamber, reservoir, relief valve adjusting cap fitting, etc.) be sure:

1. **That any pressure in the chamber has been completely vented through the suction or discharge lines, or other appropriate openings or connections.**
2. **That the driving means (motor, turbine, engine, etc.) has been "locked out" or made non-operational, so that it cannot be started while work is being done on pump.**
3. **That you know what liquid the pump has been handling and the precautions necessary to safely handle the liquid. Obtain a material safety data sheet (MSDS) for the liquid to be sure these precautions are understood.**

Failure to follow above listed precautionary measures may result in serious injury or death.

PUMP DISASSEMBLY

F, FH, G SIZES (PUMP DISASSEMBLY)

⚠ CAUTION !

When the head is being removed from the pump, the idler usually stays on the idler pin, but will fall off if the inside of the head is tilted downward. A fall on a hard surface can damage the idler. If the idler should fall, check carefully and file or stone all nicked or rough places before reassembly.

1. Remove the head from the pump. If the pump has a relief valve on head, the valve may have to be removed before removing the head.
2. Remove the head gasket. If a new gasket is not available, the original gasket may be re-used provided it was not damaged when removing the pump head.
3. Remove idler from the idler pin. If the idler pin is worn, both the idler pin and idler bushing should be replaced. On the F & FH size the idler & bushing assembly must be replaced. The idler pin may be removed from the head by pressing the pin out with a suitable press.
4. Remove the bearing locknut with a spanner wrench using a suitable wrench on the flat of the shaft to hold the shaft from turning. A piece of brass rod or wood inserted in the port area and between the rotor teeth will also hold the shaft from turning. Remove this piece of brass after locknut is removed.

5. Remove bracket capscrews and disassemble bracket from casing.
6. **REMAINING DISASSEMBLY PROCEDURE** for the 724 Series™ packed pump. See **"Figure 7" on page 6**.

   Remove the packing gland nut, packing gland retainer washer, and split packing gland halves. The internal retaining ring, does not need to be removed at this point. To remove the rotor and shaft, push or tap with a soft hammer toward the head. The packing and packing retainer washer can now be removed.
7. **REMAINING DISASSEMBLY PROCEDURE** for the 4724 Series™ mechanical seal pump. See **"Figure 8" on page 6**.

   Remove the 1/8" socketed head pipe plug on the casing and loosen the two Allen head setscrews on the mechanical seal.

   Remove the packing gland nut and seal seat. Inspect the gaskets and the seal seat for wear. If the seal is to be re-used, remove the rotating part of the mechanical seal as follows: Remove the head and idler. Push the rotor and shaft out until the outer end of the seal is approximately flush with the first undercut on the shaft. Then draw rotor shaft back into the casing and re-install head and idler on the casing as shown in **"Figure 9" on page 6**. This has positioned the rotary member beyond the casing. Now place the wire spanner wrench under the rotary member as shown in **"Figure 9" on page 6**. Place the seal seat on the rotary member and push downward firmly. In this position install two installation clips on rotary member 180° apart before removing the rotary member of the seal. The installation clips remove the load within the seal and permits easier disassembly and re-assembly of the seal. Again remove the head and idler permitting the rotor and shaft to be removed.
8. To remove the thrust bearing parts, **"Figure 10" on page 7**, first loosen the setscrew which locks the end cap. Next remove the end cap allowing ball bearing and conical spring washers to be removed. The bearings should be washed thoroughly and examined. If there is any evidence of wear or damage a new bearing should be used. Bearing replacement is recommended.
9. The casing should be examined for wear, particularly at the I.D. between the port openings.
10. The casing bushing should be inspected and if it shows signs of wear, should be replaced.
11. Examine the lipseals in the bracket and end cap. These lipseals are important to this assembly and should be replaced if not in first-class condition. They are a grease seal for the ball bearing and also act as a shield to keep dirt or debris from entering the bearing.

    When installing new lipseals, be sure they are assembled with the lips facing as shown in **"Figure 10" on page 7**.
12. If it is necessary to install a new carbon graphite bushing, extreme care should be taken to prevent breaking, as it is a brittle material and easily cracked. If cracked, this bushing will quickly disintegrate. An arbor press should always be used in installing carbon graphite bushings. Be sure the bushing is started straight. **DO NOT STOP** the pressing operation until the bushing is in proper position. Starting and stopping this operation may result in cracking.

FIGURE 7: PACKING AREA CROSS SECTION (724 SERIES™)

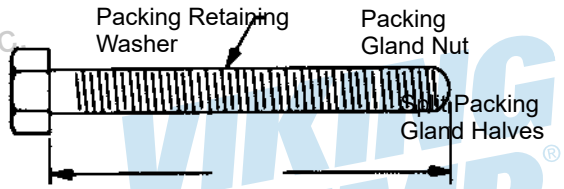

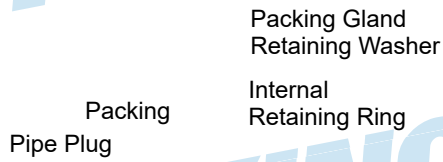

FIGURE 8: MECHANICAL SEAL AREA CROSS SECTION (4724 SERIES™)

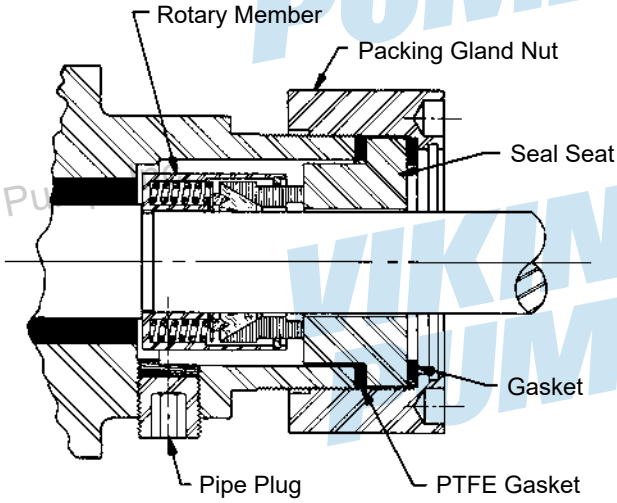

FIGURE 9

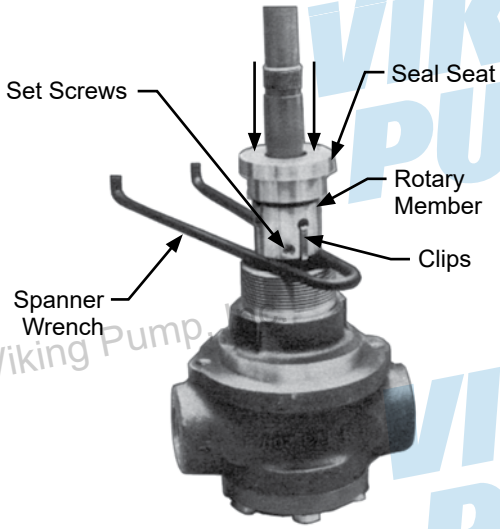

FIGURE 10

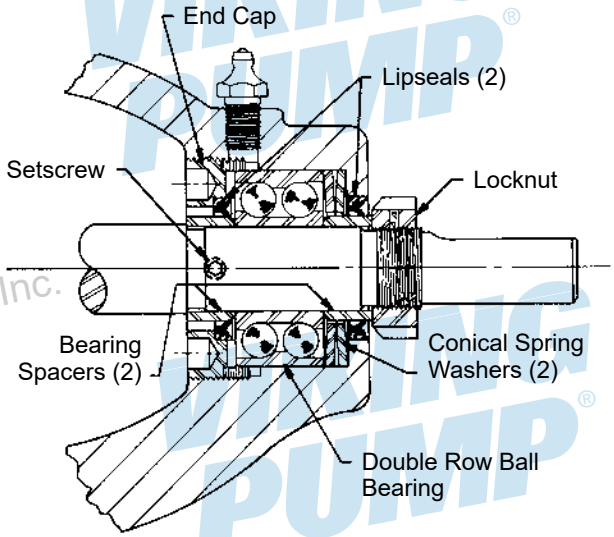

⚠ DANGER !

Before opening any Viking pump liquid chamber (pumping chamber, reservoir, relief valve adjusting cap fitting, etc.) be sure:

1. **That any pressure in the chamber has been completely vented through the suction or discharge lines, or other appropriate openings or connections.**
2. **That the driving means (motor, turbine, engine, etc.) has been "locked out" or made non-operational, so that it cannot be started while work is being done on pump.**
3. **That you know what liquid the pump has been handling and the precautions necessary to safely handle the liquid. Obtain a material safety data sheet (MSDS) for the liquid to be sure these precautions are understood.**

Failure to follow above listed precautionary measures may result in serious injury or death.

H, HL, K, KK, L, LQ, LL SIZES (PUMP DISASSEMBLY)

⚠ CAUTION !

DO NOT ALLOW THE IDLER TO FALL FROM THE IDLER PIN. Tilting the head up as it is removed will prevent this occurrence. Avoid damaging the head gasket if possible.

1. Remove the head from the pump.

   If pump is furnished with a relief valve it need not be removed from head or disassembled at this point. Refer to **"Pressure Relief Valve Instructions" on page 11**. If the pump has a steam jacket head plate, this plate will separate from the head when the head is removed from the pump. The compression O-ring between the head and the jacket head plate should be removed and the gasket surfaces on the above parts cleaned.

   NOTE: These pumps also have a steam jacket feature incorporated into the casing and bracket assembly. To avoid destroying the sealing on this steam jacket the casing should not be removed from the mounting bracket when the pump is disassembled for maintenance. If the pump is equipped with a jacketed head plate, disassembly will probably require replacement of the O-ring between the pump head and jacket head plate. These O-rings should be carried as spare parts for pumps thus equipped.
2. Remove the idler and bushing assembly from the idler pin. Replace all excessively worn parts. See **CAUTION** about replacement of carbon bushings in **Step 12**.
3. **NOTE:** A piece of wood or brass inserted between the rotor teeth and into the casing port will prevent the shaft from turning. Bend up tang on lockwasher and, using a spanner wrench, remove the lockwasher and locknut.
4. Loosen packing gland nuts on 724 Series™ pumps. Drive the shaft forward approximately 0.5 inch and inspect for presence of a pair of half round rings under the inner bearing spacer collar (K, KK, L, LQ, LL Sizes Only). If present, these rings must be removed before the rotor and shaft can be removed from the pump.
5. Carefully remove the rotor and shaft assembly from the pump. **NOTE:** Avoid damaging the bracket bushing. The rotary portion of the mechanical seal will usually come out with the shaft on 4724 Series™ pumps. Remove the stationary seal seat from the bracket counterbore. Replace rotor and shaft assembly if excessively worn.
6. Loosen the radial set screws in the bearing housing flange that locks the end cap in place and using a spanner wrench, remove the end cap, lipseal and bearing spacer collar.
7. Remove the 2-row ball bearing and inner spacer collar from bearing housing. The bearings should be washed thoroughly and examined. If there is any evidence of wear or damage a new bearing should be used. Bearing replacement is recommended.
8. Loosen two axial set screws in bearing housing flange and remove housing from bracket. Examine lipseals in end cap and bearing housing and replace with lips facing as shown in **"Figure 11" on page 7** if not in first class condition.
9. On 4724 series pumps, inspect the lipseal in the casing and replace if necessary. This lipseal must be removed if replacement of the casing bushing is necessary. See **Step 12.**

FIGURE 11

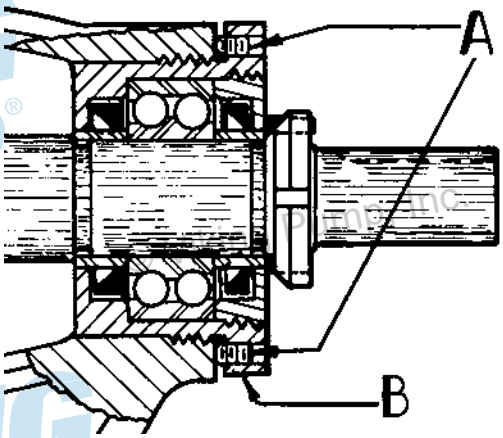

10. If it is deemed necessary to replace bracket bushing and/or repack 724 Series™ pumps, remove packing gland nuts, old packing and packing retainer washer. See **Step 12.**

11. Examine casing for excessive wear and replace if necessary.

12. The casing bushing should be inspected for wear and replaced if necessary. See **Step 9** and **Step 10.** If it is necessary to install a new carbon graphite bushing, extreme care should be taken to prevent breaking, as it is a brittle material and easily cracked. If cracked these bushings will quickly disintegrate. An arbor press should always be used in installing carbon graphite bushings. Be sure the bushing is started straight.

⚠ CAUTION !

DO NOT STOP the pressing operation until the bushing is in proper position. Starting and stopping this operation may result in a bushing crack.

Check bushings for cracks after installation. Carbon graphite bushings with extra interference fits are frequently furnished for high temperature operation. Consult your Viking Pump® representative. For additional information on high temperature applications, contact your Viking Pump® representative for Engineering Service Bulletin ESB-3.

13. **Mechanical Seal (4724 Series™):** If the mechanical seal in your pump ever fails, it can be easily replaced with a new seal. There are two basic parts to this seal. They are the rotary member and stationary seat (See **"Figure 12" on page 9**). Loosen the set screws holding the rotary member on the shaft. Remove the rotary member from the shaft and the stationary seal seat from the casing. The principle of the mechanical seal is the contact between the rotary and stationary members. These parts are lapped to a high finish and their sealing effectiveness depends upon complete contact.

PUMP ASSEMBLY

F, FH, G SIZES (PUMP ASSEMBLY)

1. Install the rotor and shaft. Be sure shaft is free from burrs and foreign particles that might damage the bracket bushing.

2. Place a head gasket on the head. With the idler on the idler pin, put the head and idler on the pump and tighten the capscrews evenly. Tilt the top of the head away from the pump slightly until the crescent enters the inside diameter of the rotor and rotate the idler until its teeth mesh with the rotor teeth. This will help in putting the head on the pump.

3. **Reassembly of 724 Series™** (See **"Figure 7" on page 6**).

   With the pump in a vertical position, install the packing retainer washer in the bottom of the stuffing box and install three rings of packing. It is a good practice to install a new set of packing. Install three rings of packing with the joints staggered. Install the two split packing gland halves. Place the packing gland retainer washer on the split packing gland halves and assemble the packing gland nut to the casing. (Skip to **Step 4**).

   The packing is now ready for adjustment. Since the stainless steel pump shaft has a tendency to become hot when packing is over-tightened, the packing must be carefully adjusted. During first few days, tighten packing slowly allowing adequate leakage as packing "runs-in". The packing when properly adjusted must have slight leakage to achieve proper operation and life. After initial adjustments occasional adjustment will be required during operation.

   Reassembly of 4724 Series™ (See **"Figure 8" on page 6**).

   Assemble mechanical seal with installing clips in place. Check shaft step to be sure it doesn't have any burrs. **DO NOT BREAK EDGE ON STEP SINCE FULL EDGE IS REQUIRED TO SUPPORT THRUST OF ROTOR SHAFT.** Coat the inside of the rotary member with light oil.

   Place the rotary member on the shaft and slide over the bearing step. **THIS SHOULD PRACTICALLY FALL INTO PLACE. NO FORCE SHOULD BE USED.** Place the wire spanner wrench under the rotary member and place the seal seat above, see **"Figure 9" on page 6**. Push the seal seat against the rotary member until installation clips are loose and can be removed. Remove the wire spanner wrench. Remove the seal seat and install the PTFE gasket and assemble the seal seat in the casing. Place the gasket in the packing gland and tighten gland to the casing. Using an Allen wrench tighten the two small setscrews on the mechanical seal through the 1/8" pipe access hole. Replace the 1/8" socket head pipe plug.

4. See **"Figure 10" on page 7**. Place the two conical spring washers with the I.D.'s in contact, (the O.D.'s will then be separated) into the thrust bearing area of the bracket. Next place the double row ball bearing and the end cap containing a lipseal into position. Tighten the end cap by hand until resistance is felt, then tighten half turn additional.

5. Place a bearing spacer collar on the shaft with the bevel on the O.D. pointing toward the drive end. Place the casing and shaft assembly in the bracket assembly and tighten with the two bracket capscrews. Insert the second bearing spacer collar (beveled edge first) over the end of the shaft and against the ball bearing.

   Place the bearing locknut on the shaft and tighten. Use a suitable wrench on the flat of the shaft to keep it from turning.

   IMPORTANT: Adjust end clearance before operating pump. Refer to **"Thrust Bearing Adjustment" on page 10**.

⚠ DANGER !

Before starting pump, be sure all drive equipment guards are in place.

Failure to properly mount guards may result in serious injury or death.

H, HL, K, KK, L, LQ, LL SIZES (PUMP ASSEMBLY)

1. Installing new seal (4724 Series™): The seal is simple to install and good performance will result if care is taken during installation. (See **"Figure 12" on page 9**) for parts identification.

   NOTE: Never touch the sealing faces with anything except the fingers or a clean cloth. Clean the rotor hub and casing seal housing, making sure both are free from dirt and grit. Coat the outside diameter of the seal seat and the inside diameter of the seal housing bore with light oil. Start the seal seat in the seal counterbore. Be sure the seat anchor pins are aligned so as to engage the slots in the end of the casing bushing as in **"Figure 13" on page 9**. Using a cardboard cushion to protect the lapped face of the seal seat, tap the seat assembly to the bottom of the seal counterbore with a wooden ram and a light hammer. Place the tapered sleeve (furnished with replacement seals, H-LL sizes) on shaft as in **"Figure 14" on page 9**. Coat the inside of the rotary member and the outside of the tapered sleeve with the light oil. Place rotary member on the shaft, over the sleeve and against the hub of the rotor. (See **"Figure 12" on page 9**).

   Remove the Tapered sleeve. Tighten the setscrew(s) in the rotary member. Some seals may be equipped with installation clips. These must be removed after seal is placed on the proper diameter portion of the shaft.

   Flush the sealing faces of both the rotary member and stationary member with oil just before installing rotor and shaft.

FIGURE 12

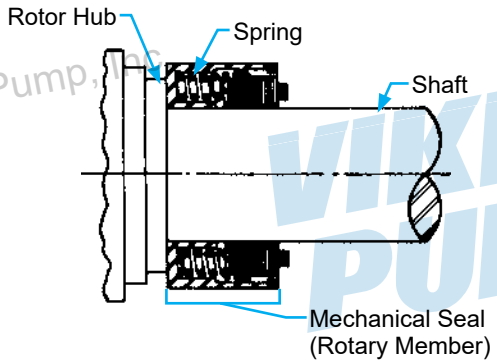

FIGURE 13

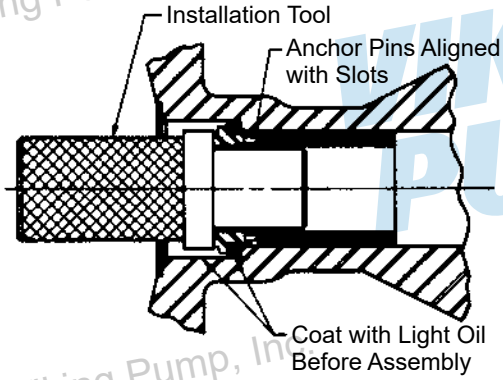

FIGURE 14

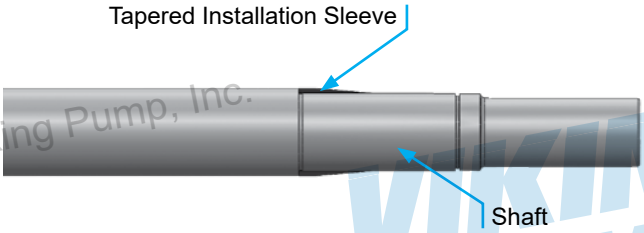

NOTE: Coat rotor shaft, tapered installation sleeve and inner diameter of mechanical seal with P-80® or equivalent before assembly.

FIGURE 15

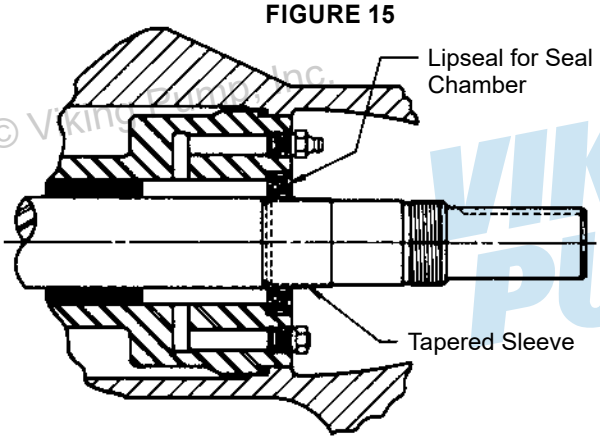

2. Be sure shaft is free from burrs and foreign particles that might damage the casing bushing. Install the rotor and shaft. Place the end of the shaft in the casing bushing and turn from right to left slowly, pushing until the ends of the rotor teeth are just below the face of the casing. Refill the casing lubrication chamber with multipurpose grease and place the tapered sleeve in the lipseal for seal chamber as shown in **"Figure 15" on page 9**. Remove the tapered sleeve from the shaft (4724 Series™).
3. On 724 Series™, pumps replace the packing retainer washer and pack the pump. It is good practice to install a set of new packing. The pump should be packed with a packing suitable for the liquid being pumped.

   NOTE: Install and seat each ring one at a time, staggering the ring joints from one side of the shaft to the other. Lubricate the packing rings with oil, grease or graphite to aid in assembly. A length of pipe or tubing will facilitate installation and seating of the packing rings.
4. Install the packing gland, studs and nuts. Back the rotor and shaft out of the casing just far enough to insert the packing gland through the side opening on the bracket and over the end of the shaft. This gland cannot be assembled over the end of the shaft when in place. Push the rotor and shaft back into place. Make sure the gland is installed square and tighten nuts wrench-tight, back off and retighten to a finger tight condition.
5. Place a head gasket on the head. The normal amount used on all sizes is one .015" gasket.
6. Place the idler and bushing assembly on the idler pin and

P-80® is a registered trademark of International Products Corporation

install the head and idler on the pump. If the pump has a jacketed head plate it will be desirable to use a new O-ring. On these pumps tighten the capscrew until metal to metal contact is made at the joint between the head and the jacket plate. Tilt the top of the head away from the pump slightly until the crescent enters the inside diameter of the rotor and rotate the idler until its teeth mesh with the rotor teeth.

7. Place the bearing collar on the shaft as far as it will go. Replace the half round rings if furnished with the pump.
8. Install the bearing housing and lipseal in the bracket.
9. Pack the ball bearing with grease, place on the shaft and push or drive into place in the bearing housing.
10. Turn the end cap (with lipseal and bearing collar inside) into the bearing housing until tight against the bearing. Lock in place with the setscrews in the outside diameter of the bearing housing.
11. **NOTE:** A piece of brass or wood inserted through the port opening between the rotor teeth will keep the shaft from turning. Install lockwasher and locknut on shaft, tighten locknut and bend down tang of lockwasher into slot of locknut.
12. Adjust pump end clearance, following procedures listed under **"Thrust Bearing Adjustment" on page 10**.

⚠ DANGER !

Before starting pump, be sure all drive equipment guards are in place.

Failure to properly mount guards may result in serious injury or death.

⚠ DANGER !

Before opening any Viking pump liquid chamber (pumping chamber, reservoir, relief valve adjusting cap fitting, etc.) be sure:

1. **That any pressure in the chamber has been completely vented through the suction or discharge lines, or other appropriate openings or connections.**
2. **That the driving means (motor, turbine, engine, etc.) has been "locked out" or made non-operational, so that it cannot be started while work is being done on pump.**
3. **That you know what liquid the pump has been handling and the precautions necessary to safely handle the liquid. Obtain a material safety data sheet (MSDS) for the liquid to be sure these precautions are understood.**

Failure to follow above listed precautionary measures may result in serious injury or death.

TABLE 1: END CLEARANCE CHART

Size	Standard End Clearance (Inches)	Turn Bearing Housing CCW:	
		Number of Notches	Length on OD (Inches)
H, HL	0.005	2.5	0.6 or 5/8
K, KK, L, LQ, LL	0.008	5.5	1.35 or 1-3/8

THRUST BEARING ADJUSTMENT

F, FH, G SIZES

1. The two conical spring washers produce a thrust load on the outer race of the double row ball bearing pushing it towards the head. End clearance adjustments are made by rotating the end cap in a clockwise or counterclockwise motion.

   To set the end clearance rotate the end cap using the wire spanner wrench in a clockwise direction while viewing from the shaft end, until noticeable drag occurs while turning the shaft. This produces zero end clearance.

   To set the proper running end clearance, rotate end cap in the opposite direction (counterclockwise) three notches which is equivalent to .003 end clearance. Each notch represents .001 end clearance.
2. Retighten setscrew locking the end cap in place.
3. High viscosity and high temperature liquids require additional end clearances. The amount of extra end clearance depends on the viscosity or temperature of the liquid pumped. For specific recommendations, consult your Viking Pump® representative.

H, HL, K, KK, L, LQ, LL SIZES

1. See **"Figure 16" on page 10**. Loosen the two set screws "A" in the outer face of the bearing housing "B" and turn this thrust bearing assembly "B" clockwise until it can no longer be turned by hand. Back off counterclockwise only until the rotor shaft can be turned by hand with a slight noticeable drag.
2. For standard end clearance, back off the thrust bearing assembly "B" the required number of notches or an equivalent length measured on the outside of the bearing housing. See **"Table 1" on page 10**.
3. Tighten the two self locking type "Allen" set screws "A," in the outboard face of the bearing housing, with equal force against the bracket. Your pump is now set with standard end clearances and locked.

   NOTE: Be sure the shaft can rotate freely. If not, back off additional notches and check again.
4. High viscosity and high temperature liquids require additional end clearances. The amount of extra end clearance depends on the viscosity or temperature of the liquid pumped. For specific recommendations, consult the your Viking Pump® representative. Each additional notch (or each 1/4") on the outside diameter of the bearing housing is equivalent to an extra end clearance of .002" on H & HL size pumps; and .0015" on K, KK, L, LQ and LL pumps.

FIGURE 16

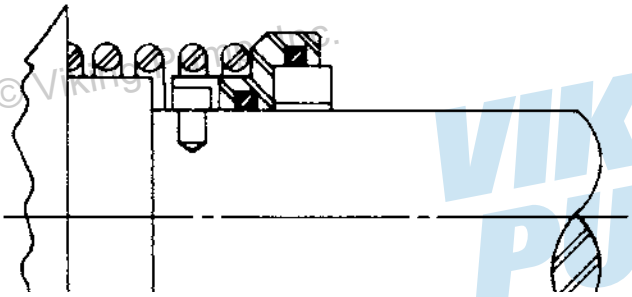

PRESSURE RELIEF VALVE INSTRUCTIONS

FIGURE 17: RELIEF VALVE - ALL SIZES
NOTE: Image is representative only.

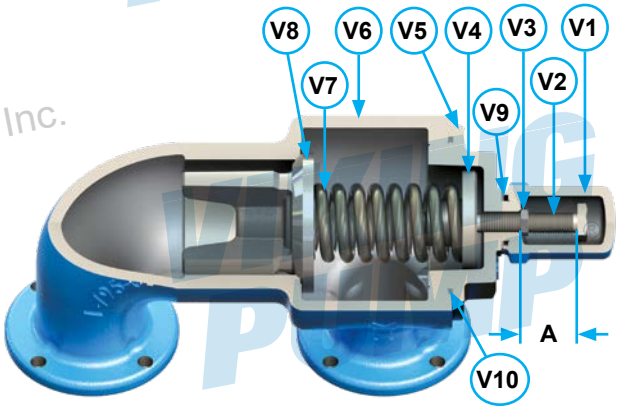

Valve - List Of Parts			
V1.	Valve Cap	V6.	Valve Body
V2.	Adjusting Screw	V7.	Valve Spring(s)
V3.	Lock Nut	V8.	Poppet
V4.	Spring Guide	V9.	Cap Gasket
V5.	Bonnet	V10.	Bonnet Gasket*

* K, KK, L, LQ, LL sizes only

⚠ DANGER !

Before opening any Viking pump liquid chamber (pumping chamber, reservoir, relief valve adjusting cap fitting, etc.) be sure:

1. **That any pressure in the chamber has been completely vented through the suction or discharge lines, or other appropriate openings or connections.**
2. **That the driving means (motor, turbine, engine, etc.) has been "locked out" or made non-operational, so that it cannot be started while work is being done on pump.**
3. **That you know what liquid the pump has been handling and the precautions necessary to safely handle the liquid. Obtain a material safety data sheet (MSDS) for the liquid to be sure these precautions are understood.**

Failure to follow above listed precautionary measures may result in serious injury or death.

DISASSEMBLY

Mark valve and head before disassembly to ensure proper reassembly.

1. Remove valve cap.
2. Measure and record length of extension of adjusting screw. Refer to "A" on **"Figure 17" on page 11**.
3. Loosen locknut and back out adjusting screw until spring pressure is released.
4. Remove bonnet, spring guide, spring and poppet from valve body. Clean and inspect all parts for wear or damage and replace if necessary.

ASSEMBLY

Reverse procedures outlined under Disassembly. If valve is removed for repairs be sure to replace in same position. Relief valve adjusting screw cap must always point towards suction side of pump. If pump rotation is reversed, remove relief valve and turn end for end.

PRESSURE ADJUSTMENT

If a new spring is installed or if pressure setting of pressure relief valve is to be changed from that which the factory has set, the following instructions must be carefully followed.

1. Carefully remove valve cap which covers adjusting screw.

   Loosen locknut which locks adjusting screw so pressure setting will not change during operation of pump.
2. Install a pressure gauge in discharge line for actual adjusting operation.
3. Turn adjusting screw CW (in) to increase pressure and CCW (out) to decrease pressure. For guidance dimensions, contact your Viking Pump® representative for Engineering Standard ES-37.
4. Close the discharge line at a point beyond the pressure gauge. Limit the amount of time the pump is being operated at this condition. The temperature inside the pump will rise rapidly. Gauge will show maximum pressure that valve will allow while pump is in operation.
5. Once pressure is set, tighten locknut and replace cap gasket and valve cap.

IMPORTANT ORDERING INFORMATION

In ordering parts for pressure relief valve, always give model number and serial number of pump as it appears on nameplate and name of part wanted. When ordering springs, be sure to give pressure setting desired.

APPENDIX (FORMERLY TSM 000)

NOTE: This Appendix section is for reference only. Not all pump construction features apply to pumps within this Technical Service Manual.

GENERAL INSTALLATION NOTES

Before installation is started, a few items of a general nature should be considered.

1. **Location** - always locate the pump as close as possible to the supply of liquid to be pumped. Locate it below the liquid supply if at all practical. Viking pumps are self priming but the better the suction conditions the better the performance.
2. **Accessibility** - the pump should be located where it is accessible for inspection, maintenance, and repair. For large pumps, allow room to remove the rotor and shaft without removing the pump from the base.
3. **Port Arrangement** - since the pumps have different port arrangements depending on the model, port location should be checked before starting the installation. The ports may be upright, opposite or at right angles to each other, see **Figure A1**. The right angle ports are normally right-hand, see **Figure A2**; some models are available with left-hand arrangements; still other models are available with the right angle ports located in any one of eight positions including right-hand and left-hand.
4. **Suction/Discharge** - shaft rotation will determine which port is suction and which is discharge. A look at **Figure A3** will show how rotation determines which port is which. As the pumping elements (gears) come out of mesh, point "A" on **Figure A3**, liquid is drawn into the suction port. Then at point "B" the gears come into mesh, and the liquid is forced out the discharge port. Reversing the rotation reverses the flow through the pump. When determining shaft rotation, always look from the shaft end of the pump. Unless otherwise specified, rotation is assumed to be clockwise (CW), which makes the suction port on the right side of the pump. The idler pin, which is offset in the pump head, should be properly positioned toward and an equal distance between the port connections. See **Figure A3** for correct idler pin location in relation to pump ports.

FIGURE A1

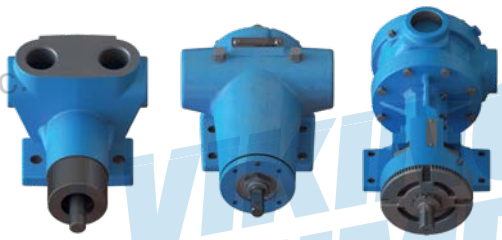

FIGURE A2

FIGURE A3

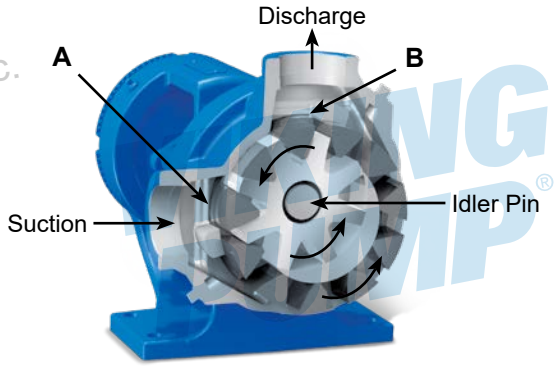

FIGURE A4:
CUTAWAY OF VIKING INTERNAL PRESSURE RELIEF VALVE

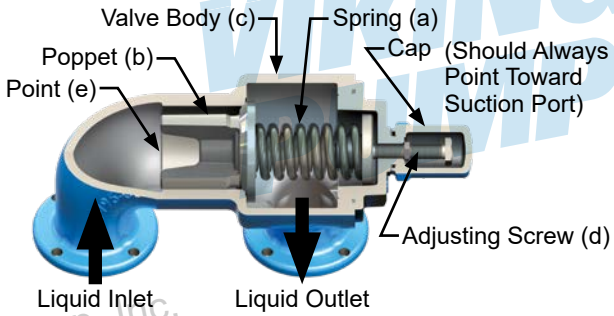

FIGURE A5-A:
INTERNAL PRESSURE RELIEF VALVE

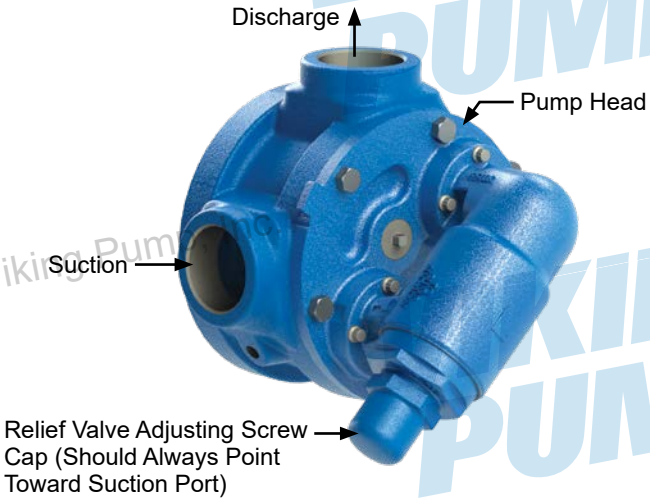

FIGURE A5-B:
RETURN-TO-TANK PRESSURE RELIEF VALVE

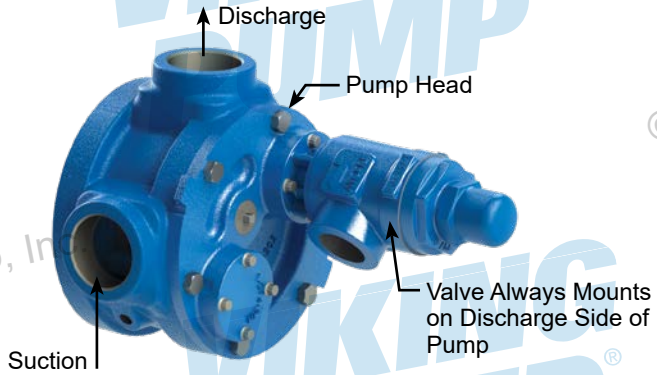

⚠ CAUTION !

Internal type relief valves mounted on Viking pumps should always have the cap or bonnet pointed toward the suction side of the pump. Return-to-tank type relief valves should always be mounted on the discharge side of the pump. If pump rotation is reversed, change the relief valve. Turn the internal type end for end; move the return-to-tank type to the other port. If on a particular installation rotation is reversed, e.g., using one pump to fill a tank, and then by use of a reversing switch or other means of changing the rotation to permit the same pump to circulate the liquid through a heater or to load out, then pressure protection must be provided on both sides of the pump for both rotations. This may be a combination of relief valves, torque limiting devices or rupture disks.

⚠ CAUTION !

Pumps or systems without relief valves should have some form of pressure protection, e.g. torque limiting devices or rupture disks.

5. **Pressure Protection** - Viking pumps are positive displacement pumps. This means that when the pump is rotated, liquid will be delivered to the discharge side of the pump. If there is no place for this liquid to go, i.e. the discharge line is blocked or closed, pressure can build up until the motor stalls, the drive equipment fails, a pump part breaks or ruptures, or the piping bursts. Because of this, some form of pressure protection must be used with a positive displacement pump. This may be a relief valve mounted directly on the pump, an inline relief valve, a torque limiting device or a rupture disk.

   The pressure relief valve mounted on most Viking pumps and most in-line valves are of the spring-loaded poppet design. See **Figure A4**. The spring (a) holds poppet (b) against the seat in the valve body (c) with a given force determined by the spring size and by how tightly it is compressed by the adjusting screw (d). The pump discharge pressure pushes against the underside of the poppet at point (e). When the force exerted by the liquid under the poppet exceeds that exerted by the spring, the poppet lifts and liquid starts to flow through the valve.

   As the discharge pressure builds up, more and more of the liquid flows through until a pressure is reached at which all of the liquid being pumped is going through the valve. This pressure is the relief valve setting.

   Viking pumps can be furnished with either an internal pressure relief valve - one which directs the flow from the valve back to the suction side of the pump - or a return-to-tank valve - which directs the flow through piping back to the supply tank. See **Figure A5-A** and **Figure A5-B**. An inline relief valve mounted in the discharge piping also directs the flow back to the supply tank. This type of valve should be mounted close to the pump so that the pressure drop through the piping between the pump and the valve is at a minimum. Be sure there are no shutoff valves between the pump and relief valve. Piping from a return-to-tank or an in-line valve to the supply tank should also be as short and as large as possible.

   NOTE: On some models, the relief valve is mounted on the pump casing instead of the pump head.

   The spring-loaded poppet-type valve is strictly a differential valve, sensing only those pressures on each side of the poppet. It should not be used as a pressure or flow control device. It is intended strictly as a relief valve.

   The pressure at which either the return-to-tank or internal relief valve bypasses can be changed by turning the adjusting screw. Do not back the adjusting screw all the way out. Stop when spring tension is off the screw (the screw starts to turn easily). For details on maintenance of the relief valve, refer to the Technical Service Manual covering your model series.

6. **Motor** - follow local electrical codes when hooking up motors.

FOUNDATION

Every pump should have a solid foundation. It may be any structure sufficiently strong to hold the pump rigid and to absorb any strain or shock that may be encountered.

A certified print of the pumping unit should be used in preparing the foundation. If a separate foundation is provided, make it at least four inches wider and longer than the base of the unit.

When the unit is placed on the foundation, it should be leveled and checked for position against the piping layout and then fastened down.

COMPONENT & UNIT LIFTING FEATURES

Removable lifting features, such as threaded eye bolts and hoist rings, installed in components (pumps, reducers, motors, etc.) and baseplates should be left on the components. These features are used to safely lift and move the individual components. Following are general guidelines for lifting Viking Pump® units.

FIGURE A6:
EXAMPLE OF PROPER LIFTING METHOD

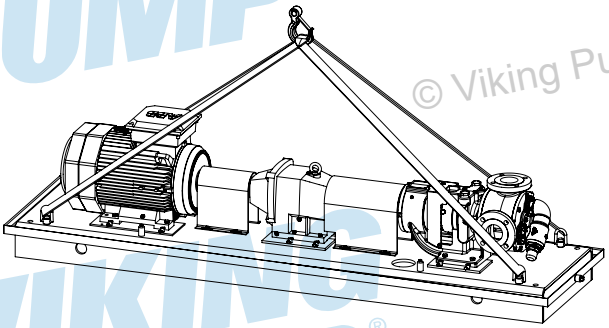

NOTE: Units should be lifted by the base lifting features using two or more lifting slings.

FIGURE A7:
EXAMPLES OF PROPER LIFTING METHOD

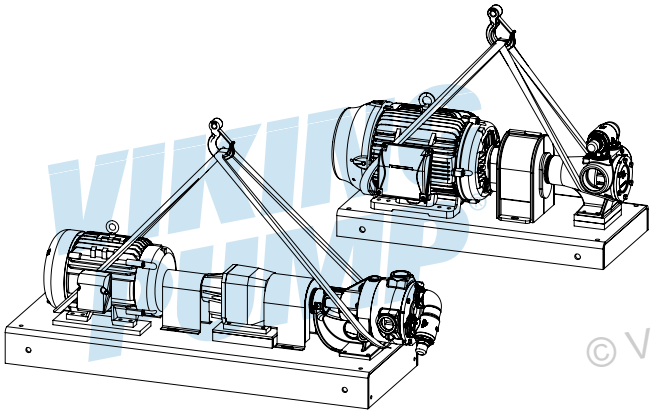

NOTE: Use two or more lifting slings around the pump and the motor when the base does not have lifting features. Make sure the slings are secure and the load is balanced before attempting to lift.

FIGURE A8:
EXAMPLE OF IMPROPER LIFTING METHOD

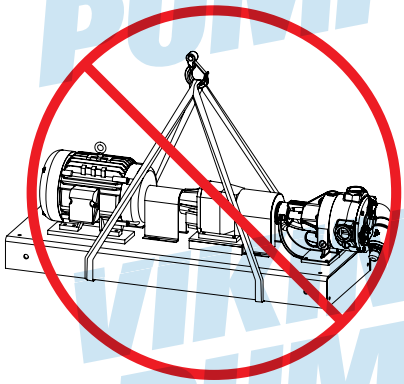

NOTE: NEVER lift the unit with slings unsecured under the base. The slings can slide, allowing the unit to tip and/or fall. Improper lifts can result in personal injury and/or damage to the unit.

FIGURE A9
EXAMPLE OF IMPROPER LIFTING METHOD

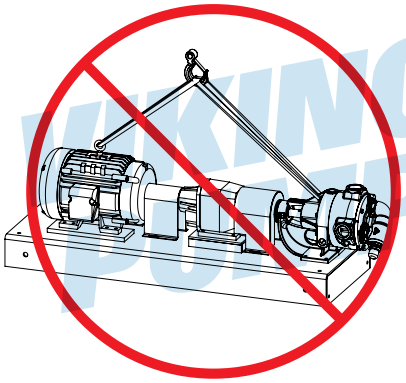

NOTE: NEVER lift the unit with slings connected to the component lifting features. The lifting features are designed for the individual component and are not rated to lift the entire unit. Improper lifts can result in personal injury and/or damage to the unit.

FIGURE A10-A

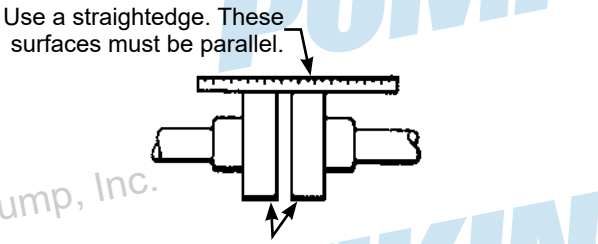

FIGURE A10-B

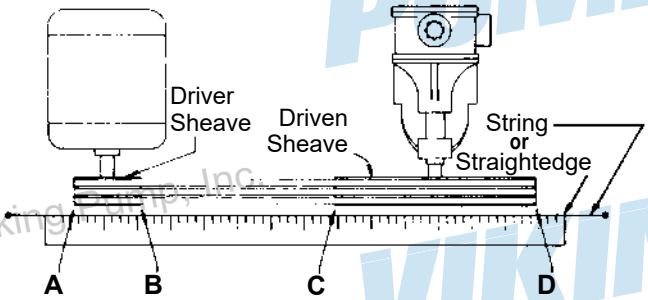

When sheaves are properly aligned, all points A, B, C, D will touch string or straightedge.

ALIGNMENT

CHECK ALIGNMENT AFTER MOUNTING

For detailed coupling alignment procedures see coupling manufacturers' recommendations.

The pump, drive, and motor were properly aligned at the time they were assembled. During shipping and mounting the alignment is often disturbed. **BE SURE TO RECHECK ALIGNMENT AFTER THE PUMP UNIT IS INSTALLED!**

1. Check pump ports to be sure they are square and in the proper position; shim or move the pump as required. Do not force piping to line up with the ports.
2. If the pump is driven by a flexible coupling(s) either directly connected to the motor or through a reducer, remove any coupling guards or covers and check alignment of the coupling halves. At a minimum, a straightedge (such as a piece of key stock) across the coupling must rest evenly on both rims at the top, bottom, and sides. See **Figure A10-A**.
3. If the pump is driven by V-belts, check the alignment by using a long straightedge or tightly drawn string across the face of the sheaves. See **Figure A10-B**.
4. Make a final check on alignment after piping is hooked up. Refer to item 13 in **Piping** section.

   Figure A11 and **Figure A12** show typical direct drive and gear reducer drive units.
5. For high temperature applications (those above 300°F) allow the pump to reach operating temperature, then recheck alignment.

FIGURE A11: DIRECT DRIVE

FIGURE A12: REDUCER DRIVE

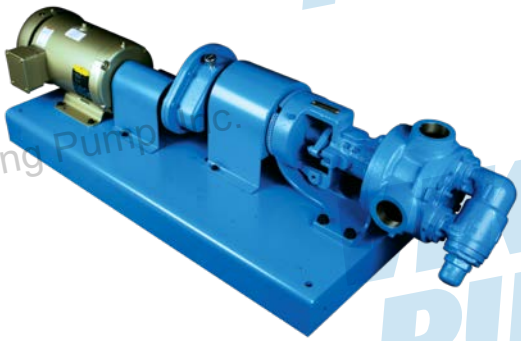

PIPING

The cause of many pumping problems can be traced to suction piping. It should always be as large and short as practical. For help in selecting the proper size suction and discharge piping, refer to **Viking General Catalog Section 510**.

Before starting the layout and installation of your piping system, consider the following points:

1. Never use piping smaller than the pump port connections.
2. Be sure the inside of the pipe is clean before hooking it to the pump.
3. **FOOT VALVE** - When pumping a light liquid with a suction lift, a foot valve at the end of the suction piping or a check valve in the first horizontal run will hold the liquid in the line and make it easier for the pump to prime. Be sure the foot or check valve is big enough so that it doesn't cause excessive line loss.
4. When approaching an obstacle in the suction or discharge line, go around the obstacle instead of over it. Going over it creates an air pocket. See **Figure A13**.
5. Where practical, slope the piping so no air or liquid pockets will be formed. Air pockets in the suction line make it hard for the pump to prime.
6. For a suction line with a long horizontal run, keep the horizontal portion below the liquid level if possible. This keeps the pipe full of liquid and reduces the amount of air the pump must evacuate at startup. This is most helpful when there is no foot valve. See **Figure A14**.
7. When piping a hot or cold system (liquid being handled is at a temperature different from the air surrounding the pump), be sure allowance is made for expansion and contraction of the piping. Loops, expansion joints, or unsecured (this does not mean unsupported) runs should be used so the pump casing is not distorted.
8. **STRAINER** - It is always good practice to consider a strainer on the suction side of a positive displacement pump. The strainer will keep foreign objects from going into the pump. Without a strainer objects can lock the pump, and damage the internals and drive. The strainer basket mesh or perforation size should be big enough so that it does not cause excessive pressure drop, but it should be fine enough to protect the pump. When in doubt as to the proper size, check with the manufacturer, giving pipe size, flow rate, and viscosity involved. Provision should be made for cleaning the strainer. If the pump operates continuously, a bypass should be built around the strainer, or two strainers should be put in parallel with proper valving so they can be isolated for cleaning. Use of a strainer is particularly important at start up to help clean the system of weld beads, pipe scale, and other foreign objects. For additional information, refer to **TSM 640**.
9. If the pump is not equipped with a relief valve, consideration should be given to mounting one in the discharge line. Refer to discussion on pressure protection under item 5 in **General Installation Notes** section.
10. The pump should not be used to support the piping. The weight of the piping should be carried by hangers, supports, stands, etc.
11. When fastening the piping to the pump it should not be necessary to impose any strain on the pump casing. "Springing" or "drawing" the piping up to the pump will

cause distortion, possible misalignment, and probable rapid wear of the pump. Do not use the pump to correct errors in piping layout or assembly.

12. All joints of the piping system should be tight; pipe sealer will help assure leak-free threaded joints. Leaks in the suction line permitting air to be drawn in may cause a noisy pump or a reduction in capacity. It is not recommended to use PTFE tape on NPT ports as a pipe sealer. This action can result in cracks in the pump.

13. **ALIGNMENT** - Check the alignment of the drive after the piping is hooked up. As a final check on pump alignment, remove the head of the pump and with a feeler gauge determine if there is clearance all the way around between the rotor and casing. Because of manufacturing tolerances, bushing clearances, etc., the rotor may not be centered in the casing, but it should not drag; dragging would indicate unit misalignment or casing distortion from piping strain. Making this check is most desirable on installations involving Q, M and N size general purpose pumps.

14. The auxiliary piping hooked to jackets, glands, etc. for heating, cooling, quenching, or for other purposes should receive the same attention as the piping handling the pumped liquid.

15. Provide a pressure relief device in any part of a pump and piping system that can be valved off and, thus, completely isolated. This is particularly important:
    a. When handling a cold liquid such as refrigeration ammonia that can warm up to ambient temperatures when the pump is shut off.
    b. When handling a liquid such as asphalt or molasses that has to be heated before it can be pumped.

    The rise in temperature causes the liquid to expand; if there is no provision for pressure relief in the closed off section, there is a chance that the pump or piping will rupture.

FIGURE A13

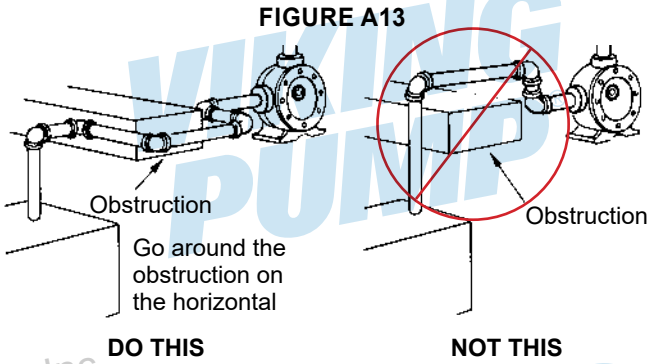

FIGURE A14

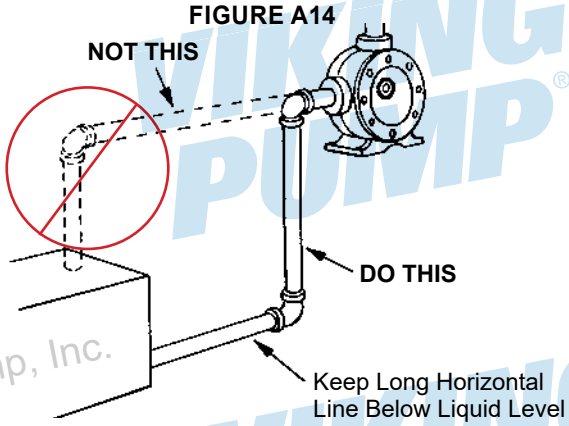

START UP

Before starting the pump, check the following:

1. Are there vacuum and pressure gauges on or near the pump? These gauges are the quickest and most accurate way of finding out what is happening in the pump.
2. Check alignment - See suggestions in the Alignment section of this manual.
3. Check piping to be sure there is no strain on the pump casing.
4. Rotate the pump shaft by hand to be sure it turns freely. **MAKE SURE THE PUMP DRIVER IS LOCKED OUT OR CANNOT BE ENERGIZED BEFORE DOING THIS.**
5. Jog motor to be sure it is turning in the right direction; refer to discussion on pump rotation under item 4 in **General Installation Notes** section.
6. Check any relief valves to be sure they are installed correctly. Refer to discussion on relief valves in **General Installation Notes** section.
7. Check suction piping to be sure:
    a. It is all connected and tight
    b. Valves are open
    c. End of pipe is below liquid level
8. Check discharge piping to be sure:
    a. It is all connected and tight
    b. Valves are open
    c. There is a place for the liquid to go
9. Lubricate any grease fitting on the pump using a #2 NLGI grease. Check any gear reducer, motor, coupling, etc. for instructions and lubricate as recommended by the manufacturer. See **Engineering Service Bulletin ESB-515** at the end of the **Appendix** for Viking standard grease types to check compatibility.
10. For packed pumps, loosen packing gland nuts so gland can be moved slightly by hand. Adjust gland to reduce leakage only after pump has run long enough to reach constant temperature. Packing should weep a little to keep it cool and lubricated.
11. Do not use the Viking pump to flush, pressure test or prove the system with water. Either remove the pump or run piping around it while flushing or testing. Pumping water, dirty or otherwise, can do more damage in a few minutes than months of normal service.
12. Check to be sure all guards are in place.
13. Check the pump to be sure it is heated to operating temperature (if jacketed or heat traced).

If the pump begins to deliver liquid within 60 seconds, it can continue to be operated. If liquid is not leaving the discharge port, stop the pump. Running the pump longer than one minute without liquid inside it can damage the pump. Review the steps just outlined, consider what the suction and discharge gauges indicate, and see **Troubleshooting** section. If everything appears to be in order, put some liquid in the pump. This will help it prime.

The pump can be restarted. If nothing is flowing within two minutes, stop the pump. The pump is not a compressor; it will not build up much air pressure. It may be necessary to vent the discharge line until liquid begins to flow.

If the pump still does not deliver flow, the cause may be one or more of the following:

1. Suction line air leaks. Vacuum gauge reading should help determine if this is the problem.
2. End of suction pipe not submerged deep enough in liquid.
3. Suction lift is too great or the suction piping is too small.
4. Liquid is vaporizing in the suction line before it gets to the pump.

If after consideration of these points it still does not pump, review again all points under **START UP**. Read through **Troubleshooting** in this manual and try again. If it still does not pump, contact your Viking Pump® representative.

TROUBLESHOOTING

A Viking pump that is properly installed and maintained will give long and satisfactory performance.

NOTE: Before making any pump adjustment or opening the pump liquid chamber in any manner, make sure that:

1. Any pressure in the pumping chamber has been vented through the suction or discharge lines or other openings provided for this purpose.
2. The driver has been “locked out” so that it cannot inadvertently be started while work is being done on the pump.
3. The pump has been allowed to cool down to the point where there is no chance of anyone being burned.

If trouble does develop, one of the first steps toward finding the difficulty is to *install a vacuum gauge in the suction port and a pressure gauge in the discharge port*. Readings on these gauges often will give a clue as to where to start looking for the trouble.

VACUUM GAUGE - SUCTION PORT

1. **High reading would indicate:**
   - **a.** Suction line is blocked by a stuck foot valve, stuck gate valve, or plugged strainer.
   - **b.** Liquid is too viscous to flow through the piping.
   - **c.** Lift is too high.
   - **d.** Line is too small.
2. **Low reading would indicate:**
   - **a.** Air leak in suction line.
   - **b.** End of pipe is not in liquid.
   - **c.** Pump is worn.
   - **d.** Pump is dry - should be primed.
3. **Fluttering, jumping, or erratic reading:**
   - **a.** Liquid is vaporizing.
   - **b.** Liquid is coming to pump in slugs, possibly an air leak, insufficient liquid above the end of the suction pipe.
   - **c.** Vibrating from cavitation, misalignment, or damaged parts.

PRESSURE GAUGE - DISCHARGE PORT

1. **High reading would indicate:**
   - **a.** High viscosity, small diameter discharge line or long discharge line.
   - **b.** Gate valve is partially closed.
   - **c.** Filter is plugged.
   - **d.** Vertical head did not consider a high specific gravity liquid.
   - **e.** Line is partially plugged from build up on inside of pipe.
   - **f.** Liquid in the pipe is not up to temperature.
   - **g.** Liquid in the pipe has undergone a chemical reaction and has solidified.
   - **h.** Relief valve is set too high.
2. **Low reading would indicate:**
   - **a.** Relief valve is set too low.
   - **b.** Relief valve poppet is not seating properly.
   - **c.** Bypass around the pump is partially open.
   - **d.** Too much extra clearance.
   - **e.** Pump is worn.
3. **Fluttering, jumping, or erratic reading:**
   - **a.** Cavitation.
   - **b.** Liquid is coming to the pump in slugs.
   - **c.** Air leak is in the suction line.
   - **d.** Vibrating from misalignment or mechanical problems.

Some of the following may also help pinpoint the problem:

A. Pump does not pump.

1. Pump has lost its prime due to air leak, low level in tank, foot valve stuck.
2. Suction lift is too high.
3. Rotating in wrong direction.
4. Motor does not come up to speed.
5. Suction and discharge valves not open.
6. Strainer is clogged.
7. Bypass valve open, relief valve set too low, relief valve poppet stuck open.
8. Pump is worn out.
9. Any changes in the liquid system or operation that would help explain the trouble, e.g. new source of supply, added more lines, inexperienced operators, etc.
10. Too much end clearance.
11. Head position is incorrect. See **Figure A3**.
12. Temperature changes either in the liquid or environment.
13. **Mag Drive pumps ONLY:** The magnetic coupling is decoupling. Changes in application (temperature, pressure, viscosity, etc.) may require torque beyond coupling capabilities.

B. Pump starts, then loses its prime.

1. Supply tank is empty.
2. Liquid is vaporizing in the suction line.
3. Air leaks or air pockets in the suction line; leaking air through packing or mechanical seal.
4. Pump is worn out.

C. Pump is noisy.

1. Pump is being starved (heavy liquid cannot get to pump fast enough). Increase suction pipe size or reduce length.
2. Pump is cavitating (liquid vaporizing in the suction line). Increase suction pipe size or reduce length. If pump is above the liquid, raise the liquid level closer to the pump. If the liquid is above the pump, increase the head of liquid.
3. Check alignment.
4. May have a bent shaft or rotor tooth. Straighten or replace.
5. Relief valve chatter. Increase pressure setting.
6. May have to anchor base or piping to eliminate or reduce vibration.
7. May be a foreign object trying to get into the pump through the suction port.
8. **Mag Drive pumps ONLY:** The magnetic coupling has decoupled. Shut off and let cool, then restart.

D. Pump not up to capacity.

1. Starving or cavitating. Increase suction pipe size or reduce length.
2. Strainer partially clogged.
3. Air leak in suction piping or along pump shaft.
4. Running too slowly. Check the motor is running at the correct speed and that it is wired correctly.
5. Bypass line around pump partially open.
6. Relief valve set too low or stuck open.
7. Pump is worn out.
8. Too much end clearance.
9. Head position incorrect. See **Figure A3**.

E. Pump takes too much power.

1. Running too fast. Verify the motor speed, reducer ratio, sheave size, and other drive components are correct for the application?
2. The liquid is too viscous for the size of the unit. Heat the liquid to reduce viscosity, increase the pipe size, slow down the pump, or use a larger motor.
3. Discharge pressure higher than calculated. Verify with a pressure gauge. Increase size or reduce length of pipe, reduce speed (capacity), or get bigger motor.
4. Packing gland drawn down too tight.
5. Pump misaligned.
6. Extra clearance on pumping elements may not be sufficient for operating conditions. Check parts for evidence of drag or contact in pump and increase clearance where necessary.
7. System pressure relief valve is set too high.
8. Bushings have locked to shaft or pin, or the liquid has set up in the pump.

F. Rapid Wear.

On most applications the pump will operate for many months or years before it gradually loses its ability to deliver capacity or pressure. Examination of such a pump would show a smooth wear pattern on all parts. Rapid wear, occurring in a few minutes, hours or days, shows up as heavy grooving, galling, twisting, breaking or similar severe signs of trouble. See **Rapid Wear Table**.

RAPID WEAR

RAPID WEAR TABLE

CAUSE		EVIDENCE	POSSIBLE SOLUTION
1	ABRASIVES	Gouges or marks made by large, hard particles; a rapid wearing away of bushings from very small abrasives; or anything in between.	Flush the system with the pump removed. Install strainer in suction line. Most abrasive objects and particulate is removed after a few cycles (or days) of flushing.
2	CORROSION	Rust, pitting or metal appears to be "eaten" away.	Check the Viking General Catalog Liquid List for materials of construction recommendation. Consider whether all of the materials used in pump construction were attacked; consider other materials used in the system to determine how they resisted the liquid. Check to see whether or not the liquid has been contaminated to make it more corrosive than anticipated.
3	EXCEEDING OPERATING LIMITS	Noisy operation, broken bushings, twisted shaft, parts show evidence of high heat (discoloration).	Review General Catalog for operating limits on particular model involved.
4	INSUFFICIENT EXTRA CLEARANCE	Pump may stall. Evidence of heavy contact between end of rotor teeth and head or other parts.	Increase end clearance and/ or contact your Viking Pump® representative with details of the application, so that information regarding proper extra clearance may be provided.
5	LACK OF LUBRICATION	Noisy bearings, localized heating at bearings or lip seal, smoke, rapid bushing wear.	Be sure all grease fittings are greased before starting, and instructions for lubrication of drive equipment are followed; consider use of auxiliary lubricating equipment.
6	MISALIGNMENT	Wear on only one part of a surface, e.g., one side of the casing, one side of the packing gland, only a portion of the face of the head.	Double check alignment of drive equipment and piping. Check the alignment under conditions as close to operating conditions as possible.
7	RUN DRY	Pump stalls because parts have uneven expansion caused by frictional heat; galling between surfaces having relative motion; seal seats and idler pins changing color because of high heat.	Be sure there is liquid in the system at the time of start up. Provide some kind of automatic alarm or shut-off if supply tank runs dry.

PREVENTATIVE MAINTENANCE

Performing a few preventative maintenance procedures will extend the life of your pump and reduce the overall cost of ownership.

A. Lubrication - Grease all grease fittings after every 500 hours of operation. If service is severe, grease more often. Do it gently with a hand gun until the grease exiting the lip seal or relief plug is similar in consistency and color to the new grease.

Use a NLGI #2 grease for normal applications. See **ESB-515** at the end of the **Appendix** for Viking standard grease types to check compatibility. For hot or cold applications, use appropriate grease.

O-Pro™ seals should also be greased every 500 hours of operation with a lubricating fluid compatible with the process fluid.

B. Packing Adjustment - Occasional packing adjustment may be required to keep leakage to a slight weep. If impossible to reduce leakage by gentle tightening, replace packing or use different type. *Refer to Technical Service Manual on particular model series for details on repacking.*

C. End Clearance Adjustment - After long service, the running clearance between the end of the rotor teeth and the head may have increased through wear. This wear may cause a loss of capacity or pressure. Resetting end clearance will normally improve pump performance. *Refer to TSM on particular model series for procedure on adjusting end clearance for pump involved.*

D. Examine Internal Parts - Periodically remove the head, examine idler and bushing and head and pin for wear. Replacing a relatively inexpensive idler bushing and idler pin after only moderate wear will eliminate the need to replace more expensive parts at a later date. *Refer to TSM on particular model series for procedure in removing head of the pump.* Be sure idler does not slide off the idler pin as the head is removed. If it does slide off the idler can cause personal injury or damage the part.

E. Cleaning the Pump - A clean pump is easier to inspect, lubricate, adjust, and runs cooler.

F. Storage - If pump is to be stored or not used for six months or more, pump must be drained, and a light coat of non-detergent SAE 30 weight oil must be applied to all internal pump parts. Lubricate fittings and apply grease to pump shaft extension. Viking suggests rotating pump shaft by hand one complete revolution every 30 days to circulate the oil. Retighten all gasketed joints before using the pump.

DO'S & DON'TS

Do's and Don'ts for installation, operation, and maintenance of Viking pumps to assure safe, long, trouble-free operation.

INSTALLATION

1. **DO** install pump as close to supply tank as possible.
2. **DO** leave working space around the pumping unit.
3. **DO** use large, short, and straight suction piping.
4. **DO** install a strainer in the suction line.
5. **DO** double check alignment after the unit is mounted and piping is hooked up.
6. **DO** provide a pressure relief valve for the discharge side of the pump.
7. **DO** cut out the center of gaskets used as port covers on flanged port pumps.
8. **DO** record pump model number and serial number and file for future reference.

OPERATION

1. **DON'T** run pump at speeds faster than shown in the catalog for your model.
2. **DON'T** require pump to develop pressures higher than those shown in the catalog for your model.
3. **DON'T** operate pumps at temperatures above or below limits shown in the catalog for your pump.
4. **DON'T** operate pumps without all guards being in place.
5. **DON'T** operate pump without a relief valve on the pump or in the discharge piping. Be sure valve is mounted and set correctly.
6. **DON'T** exceed catalog limits for temperature and pressures of fluids in jacketed areas of pump.
7. **DON'T** use the pump in a system which includes a steam, air, or vapor blow or purge **without** provision for over-speed shutdown, in case the pump starts to act as a turbine and over-speeds the drive.
8. **DON'T** operate the pump with all of the liquid bypassing through a pump mounted internal type relief valve, or without any flow of liquid going through the pump for more than a couple of minutes. Operation under either of these conditions may result in a heat build-up in the pump, which could cause hazardous conditions or happenings.

MAINTENANCE

1. **DO** make sure any pump that has residual system pressure in it, or that has handled high vapor pressure liquids, such as LP-gas, ammonia, Freons, etc., has been vented through the suction or discharge lines or other openings provided for this purpose.
2. **DO** make sure that if the pump is still hooked to the driver while maintenance is being performed that the driver has been "locked out", so that it cannot be inadvertently started while work is being done on the pump.
3. **DO** make sure any pump that has handled a corrosive, flammable, hot, or toxic liquid has been drained, flushed, vented and/or cooled before it is disassembled.
4. **DO** remember that a few simple preventative maintenance procedures such as periodic lubrication, adjustment of end clearance, examination of internal parts, etc., will extend the service life of your pump.
5. **DO** obtain, read and keep maintenance instructions furnished with your pump.
6. **DO** have spare parts, pumps or standby units available, particularly if the pump is an essential part of a key operation or process.
7. **DON'T** drop parts during disassembly, e.g., idler can slip from the pin as the head is removed from the pump. It may cause personal injury or damage the part.
8. **DON'T** stick fingers in the ports of a pump. Serious injury may result.
9. **DON'T** spin the idler on the idler pin. Fingers may be jammed between teeth and crescent.

Effective 25-July-19

LUBRICATION OF VIKING PUMPS

Usage of Grease	General Description of Grease Used by Viking	Viking Recommended Supplier
Grease used for anti-friction bearings, sleeve bearings and lantern rings	Premium EP, Multi-purpose polyurea base grease	Any NLGI Grade 2 premium quality, multi-purpose, polyurea grease
Grease used for bracket bushing when seal is behind rotor	Petrolatum	Chevron Petrolatum Snow White
Grease used for O-Pro® Barrier / Guard Seals	Edible Grease, aluminum complex	Chevron FM ALC EP 0, 1, 2
Grease used for O-Pro® Cartridge Seals	High Temperature Grease	Misty Ultra High Temp Superfilm G00735

Lubricate each grease fitting every 500 hours of operation or every six months, whichever occurs first. If service is severe, grease more often. Be sure the grease is compatible with the grease used by Viking. Grease used for the bracket bushing and O-Pro® Seal should be compatible with the liquid being pumped.

Reservoir on Ammonia Pumps: The Series 4924A ammonia pumps are shipped without oil in the reservoir. Before start-up, fill the reservoir with one pint of Light Refrigeration Oil that is compatible with the Neoprene seal and with a maximum viscosity of 15,000 SSU at operating temperature. Drain and refill the reservoir after the first 200 hours of operation and every 1000 hours thereafter. Refer to Technical Service Manual TSM 1467.

Pumping Chamber of Stainless Pumps: All internal parts are coated with test fluid to avoid galling when the pump is first installed. Be sure the pump is kept full of liquid when in operation to prevent damage to the pump.

LUBRICATION OF VIKING REDUCERS

Viking gear reducers, "A", "B", "C" sizes use SAE 30 oil above 32°F and SAE 10W oil below 32°F.

- A Size: 3/8 PT. (6 oz)
- B Size: 1/2 PT. (8 oz.)
- C Size: 2-1/4 PT. (36 oz.)

Viking gear reducers are shipped less oil. Before start-up, fill to proper level with quantity and type of oil shown in box at left. After first 100 hours of operation, drain and refill with new lubricant. Check lubricant level every 2000 hours or every six months. Once each year, drain and refill.

LUBRICATION OF VIKING ASSOCIATIVE EQUIPMENT

Check any motor, coupling, gear reducer or other drive equipment for manufacturer's instructions and lubricate as recommended.

VIKING PUMP®

WARRANTY

Viking pumps, strainers and reducers are warranted to be free of defects in material and workmanship under normal conditions of use and service. The warranty period varies by type of product. A Viking product that fails during its warranty period under normal conditions of use and service due to a defect in material or workmanship will be repaired or replaced by Viking. At Viking's sole option, Viking may refund (in cash or by credit) the purchase price paid to it for a Viking product (less a reasonable allowance for the period of use) in lieu of repair or replacement of such Viking product. Viking's warranty is subject to certain restrictions, limitations, exclusions and exceptions. A complete copy of Viking's warranty, including warranty periods and applicable restrictions, limitations, exclusions and exceptions, is posted on Viking's website (www.vikingpump.com/warranty#information). A complete copy of the warranty may also be obtained by contacting Viking through regular mail at Viking Pump, Inc., 406 State Street, Cedar Falls, Iowa 50613, USA.

THIS WARRANTY IS AND SHALL BE VIKING'S SOLE AND EXCLUSIVE WARRANTY AND IS IN LIEU OF ALL OTHER WARRANTIES, EXPRESS OR IMPLIED, INCLUDING, BUT NOT LIMITED TO, ALL WARRANTIES OF MERCHANTABILITY, FITNESS FOR A PARTICULAR PURPOSE AND NON-INFRINGEMENT, ALL OF WHICH OTHER WARRANTIES ARE EXPRESSLY EXCLUDED.

THE RIGHTS AND REMEDIES UNDER THIS WARRANTY ARE AND SHALL BE THE SOLE AND EXCLUSIVE RIGHTS AND REMEDIES AGAINST VIKING. EXCEPT FOR THE SPECIFIC LIABILITIES AND OBLIGATIONS PROVIDED UNDER THIS WARRANTY, VIKING SHALL HAVE NO LIABILITY OR OBLIGATION WITH RESPECT TO ANY PRODUCT CLAIMED TO BE DEFECTIVE IN ANY MANNER.

UNDER NO CIRCUMSTANCES SHALL VIKING BE LIABLE UNDER THIS WARRANTY OR OTHERWISE FOR SPECIAL, INCIDENTAL, INDIRECT, CONSEQUENTIAL OR PUNITIVE DAMAGES OF ANY KIND, INCLUDING, BUT NOT LIMITED TO, LOST OR UNREALIZED SALES, REVENUES, PROFITS, INCOME, COST SAVINGS OR BUSINESS, LOST OR UNREALIZED CONTRACTS, LOSS OF GOODWILL, DAMAGE TO REPUTATION, LOSS OF PROPERTY, LOSS OF INFORMATION OR DATA, LOSS OF PRODUCTION, DOWNTIME, OR INCREASED COSTS, IN CONNECTION WITH ANY PRODUCT, EVEN IF VIKING HAS BEEN ADVISED OR PLACED ON NOTICE OF THE POSSIBILITY OF SUCH DAMAGES AND NOTWITHSTANDING THE FAILURE OF ANY ESSENTIAL PURPOSE OF ANY PRODUCT.