PUMP MODEL	TRA10-0640
ORIENTATION	VERTICAL
COVER	STANDARD
INLET	RECTANGULAR FLANGE (BOTTOM)
DISCHARGE	2.5" TRI-CLAMP
SPECIALS	NONE

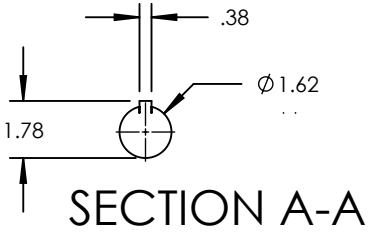

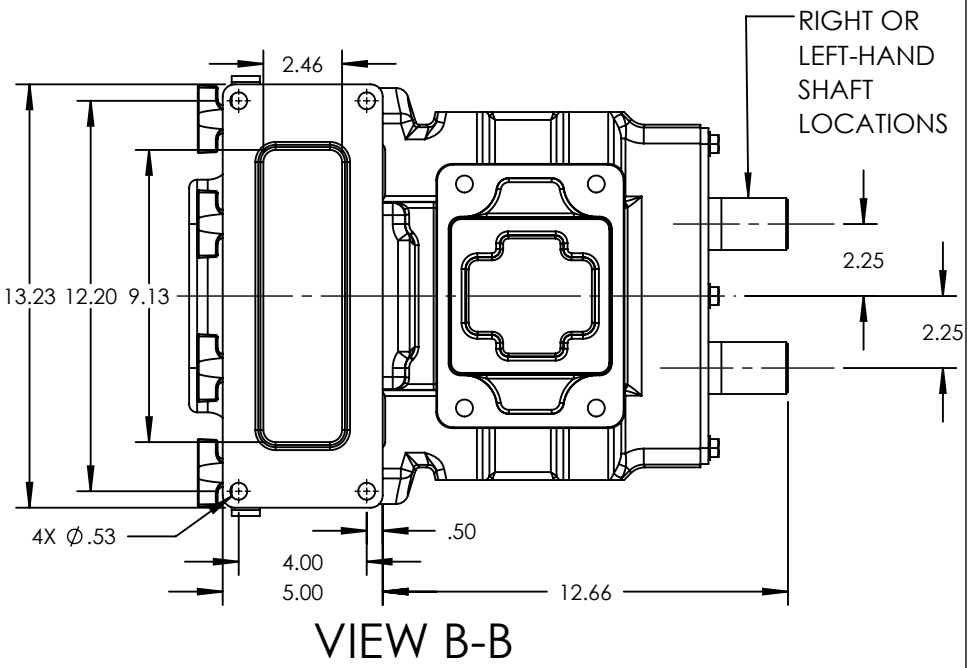

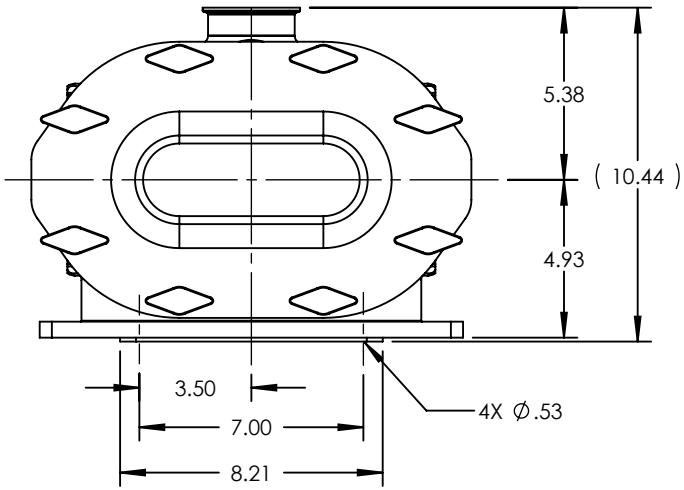

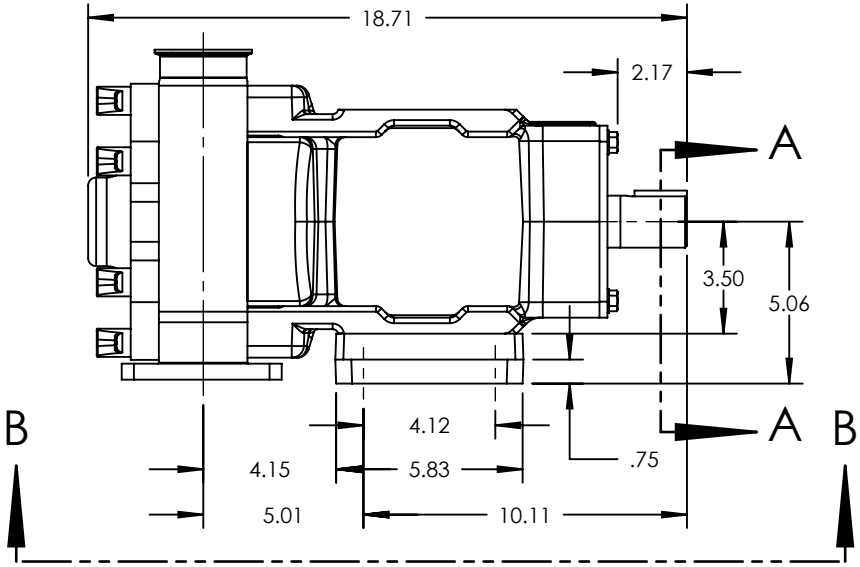

NOTES:
THIS IS NOT A CERTIFIED DRAWING. USE FOR GENERAL INSTALLATION ONLY.
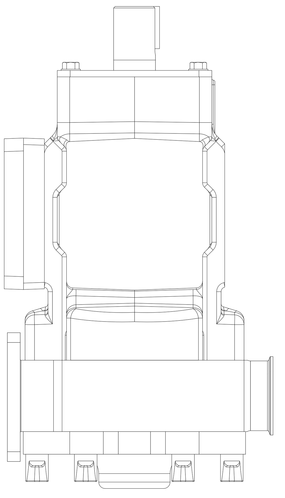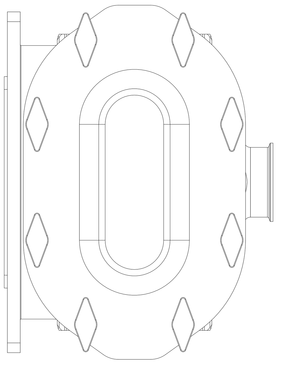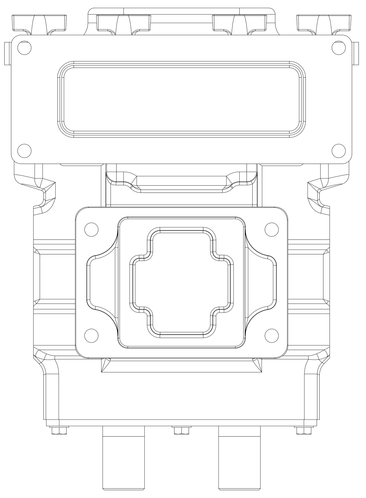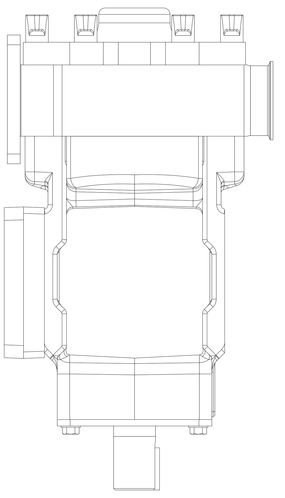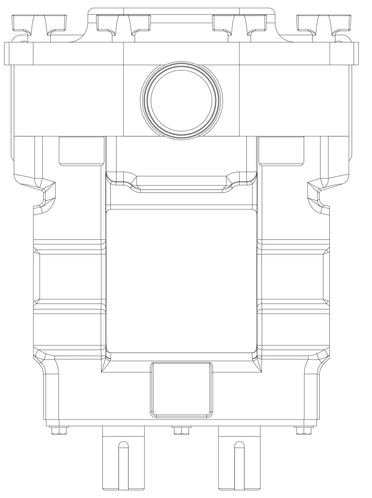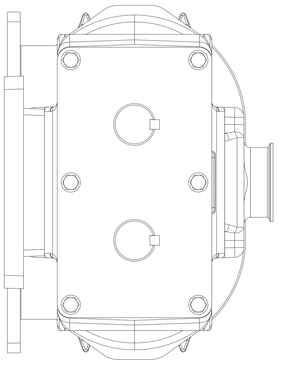
STATE	Released	04/16/2016	DIMENSIONS ARE IN INCHES	wrightflow TECHNOLOGIES — Wrightflow Technologies, A Unit of IDEX Corporation, Cedar Falls, IA 50613 U.S.A., Eastborne, East Sussex, BN23 6PT UK	THIS DRAWING IS THE PROPERTY OF WRIGHTFLOW TECHNOLOGIES AND IS PROPRIETARY IN GENERAL AND DETAIL. IT SHALL NOT BE COPIED OR ITS CONTENTS REVEALED TO OUTSIDE PARTIES WITHOUT THE WRITTEN CONSENT OF WRIGHTFLOW TECHNOLOGIES	3D	DWG. NO. SHEET 1 OF 2	REV. A.0
DRAWN	jgerbig	4/15/2016	PROJECT:				TRA10-0640-013	04/16/2016
CHECKED	JAG	04/15/2016	WAS: