PUMP MODEL	TRA20-2200
ORIENTATION	HORIZONTAL
COVER TYPE	STANDARD
INLET	4.0" IDF
DISCHARGE	4.0" IDF
SPECIALS	NONE

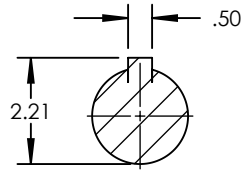

SECTION A-A
SCALE 1 : 4

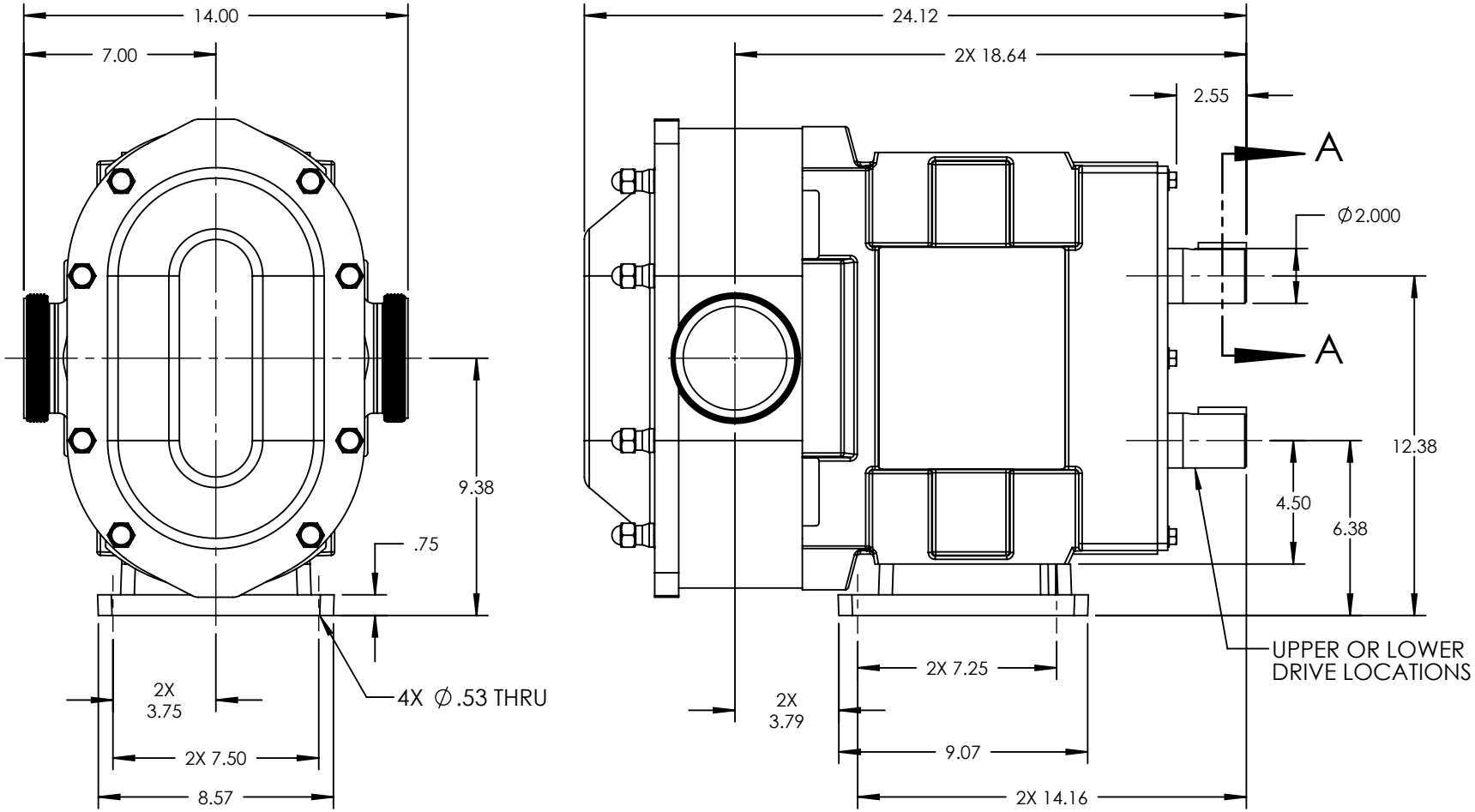

NOTES:
1. THIS IS NOT A CERTIFIED DRAWING. USE FOR GENERAL INSTALLATION ONLY.
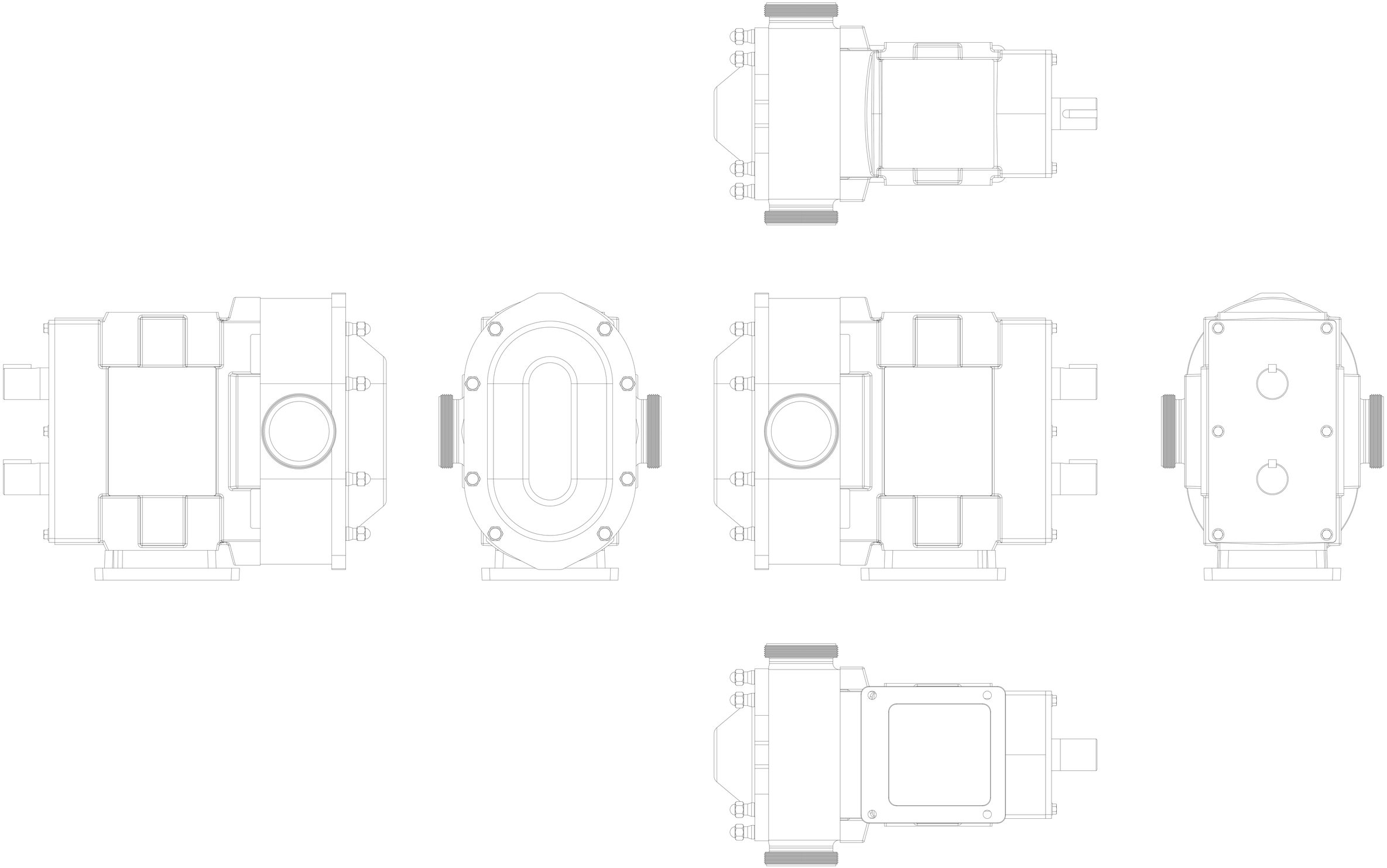
STATE	Check	09/30/2014	DIMENSIONS ARE IN INCHES	wrightflow TECHNOLOGIES — Wrightflow Technologies, A Unit of IDEX Corporation, Cedar Falls, IA 50613 U.S.A. Eastborne, East Sussex, BN23 6PT UK	THIS DRAWING IS THE PROPERTY OF WRIGHTFLOW TECHNOLOGIES AND IS PROPRIETARY IN GENERAL AND DETAIL. IT SHALL NOT BE COPIED OR ITS CONTENTS REVEALED TO OUTSIDE PARTIES WITHOUT THE WRITTEN CONSENT OF WRIGHTFLOW TECHNOLOGIES	3D	DWG. NO. SHEET 1 OF 2	REV. A.0
DRAWN	cneff	9/30/2014	PROJECT:				TRA20-2200-013	
CHECKED	-	-	WAS: