PUMP MODEL	TRA20-1800
ORIENTATION	VERTICAL
COVER	STANDARD
INLET	3.0" ANSI CLASS 300 FLANGE
DISCHARGE	3.0" ANSI CLASS 300 FLANGE
SPECIALS	NONE

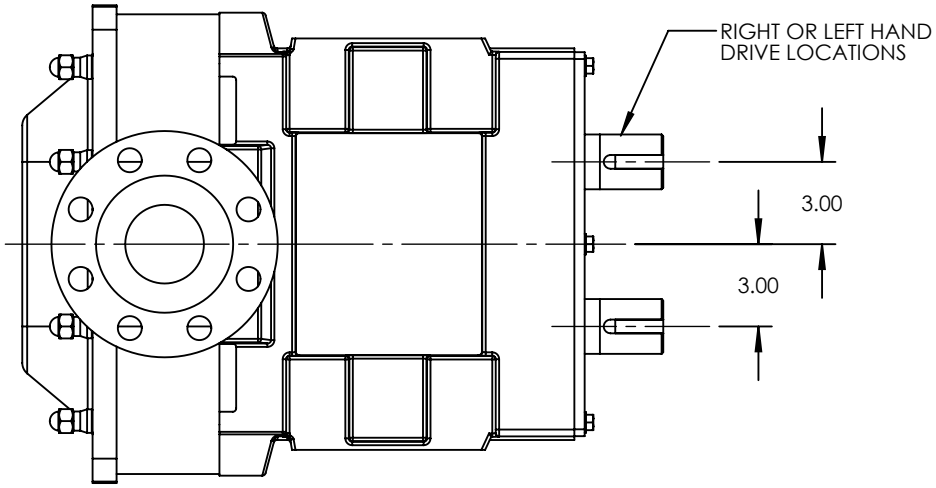

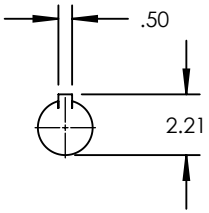

SECTION A-A

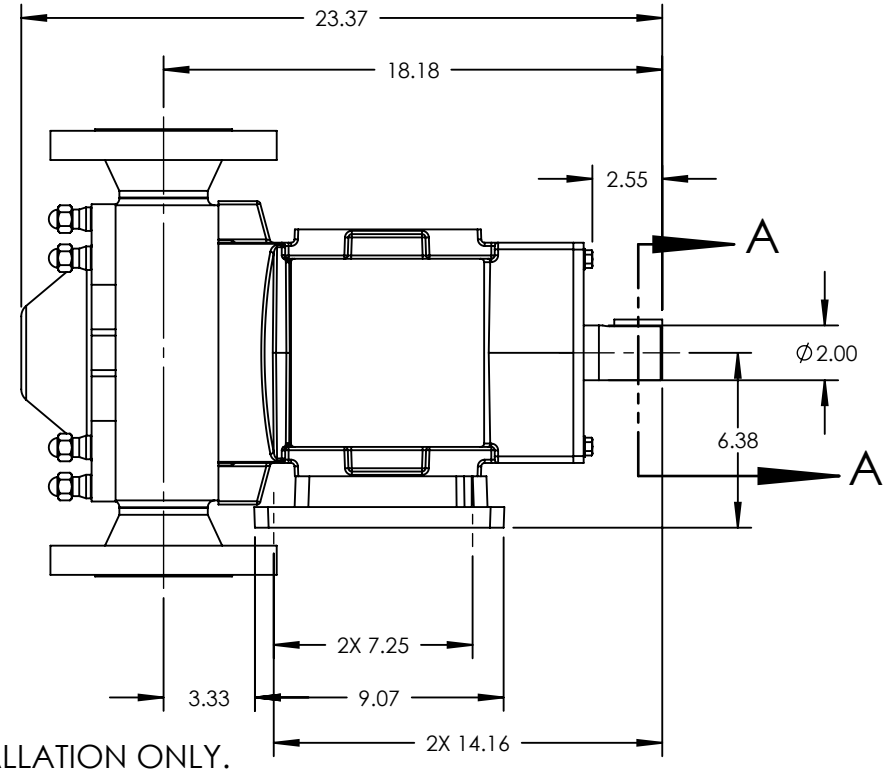

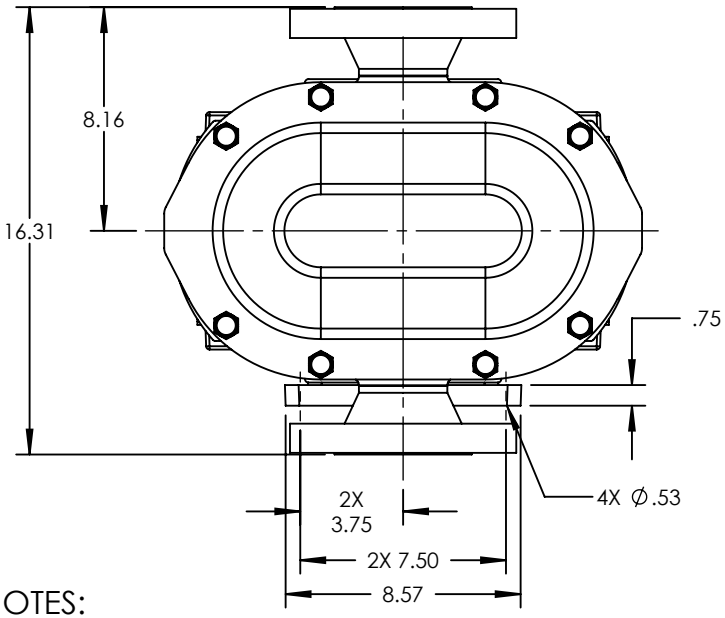

NOTES:
1. THIS IS NOT A CERTIFIED DRAWING. USE FOR GENERAL INSTALLATION ONLY.
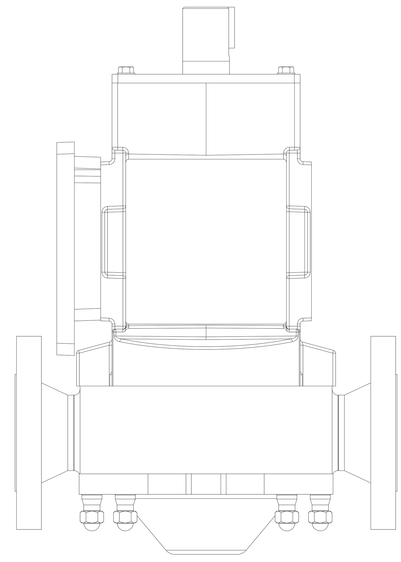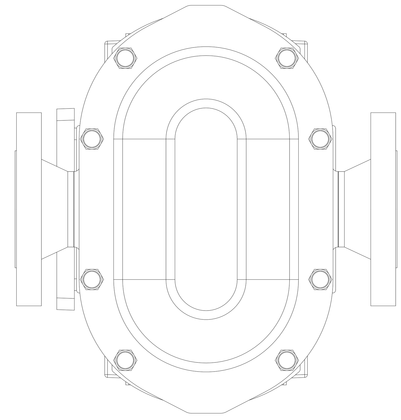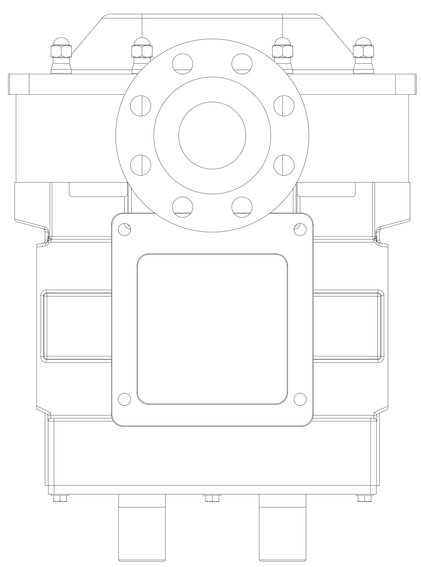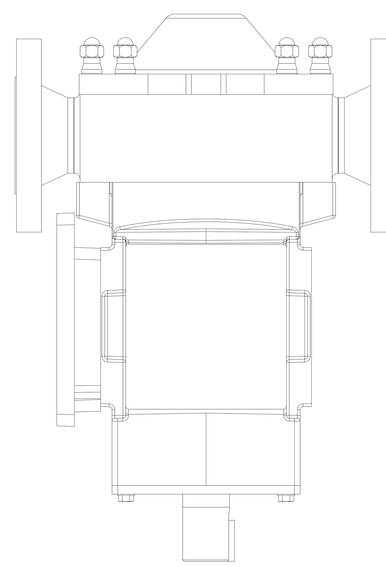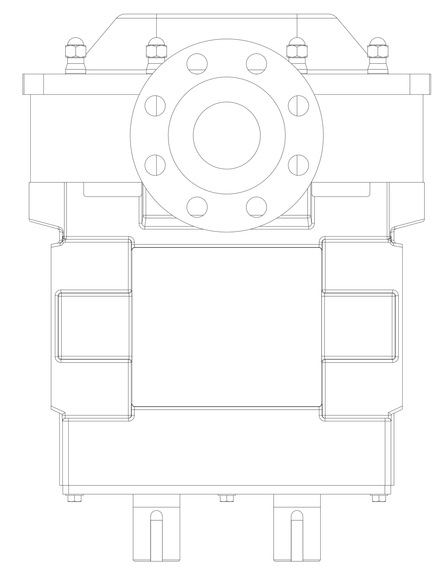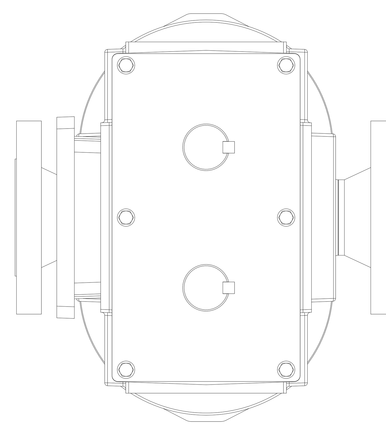
STATE	Released	10/26/2018	DIMENSIONS ARE IN INCHES	wrightflow TECHNOLOGIES	THIS DRAWING IS THE PROPERTY OF WRIGHTFLOW TECHNOLOGIES AND IS PROPRIETARY IN GENERAL AND DETAIL. IT SHALL NOT BE COPIED OR ITS CONTENTS REVEALED TO OUTSIDE PARTIES WITHOUT THE WRITTEN CONSENT OF WRIGHTFLOW TECHNOLOGIES	3D	DWG. NO. SHEET 1 OF 2	REV. B.0
DRAWN	jgerbig	10/26/2018	PROJECT:	Wrightflow Technologies, A Unit of IDEX Corporation Cedar Falls, IA 50613 U.S.A. Eastborne, East Sussex, BN23 6PT UK			TRA20-1800-006	
CHECKED	JAG	10/26/2018	WAS: