PUMP MODEL	TRA10-0300
ORIENTATION	HORIZONTAL
COVER	STANDARD
INLET	1.5" TRI-CLAMP
DISCHARGE	1.5" TRI-CLAMP
SPECIALS	NONE

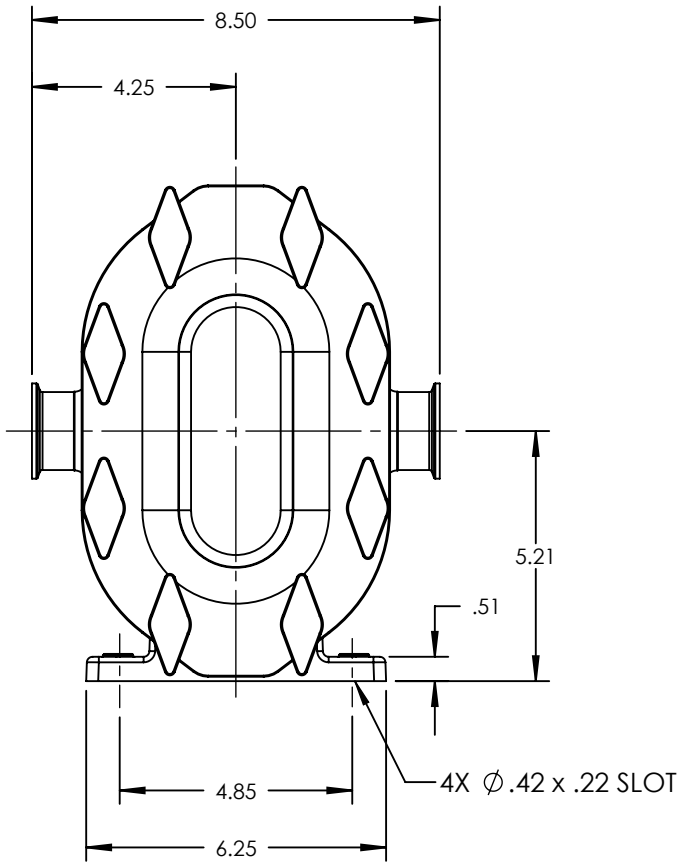

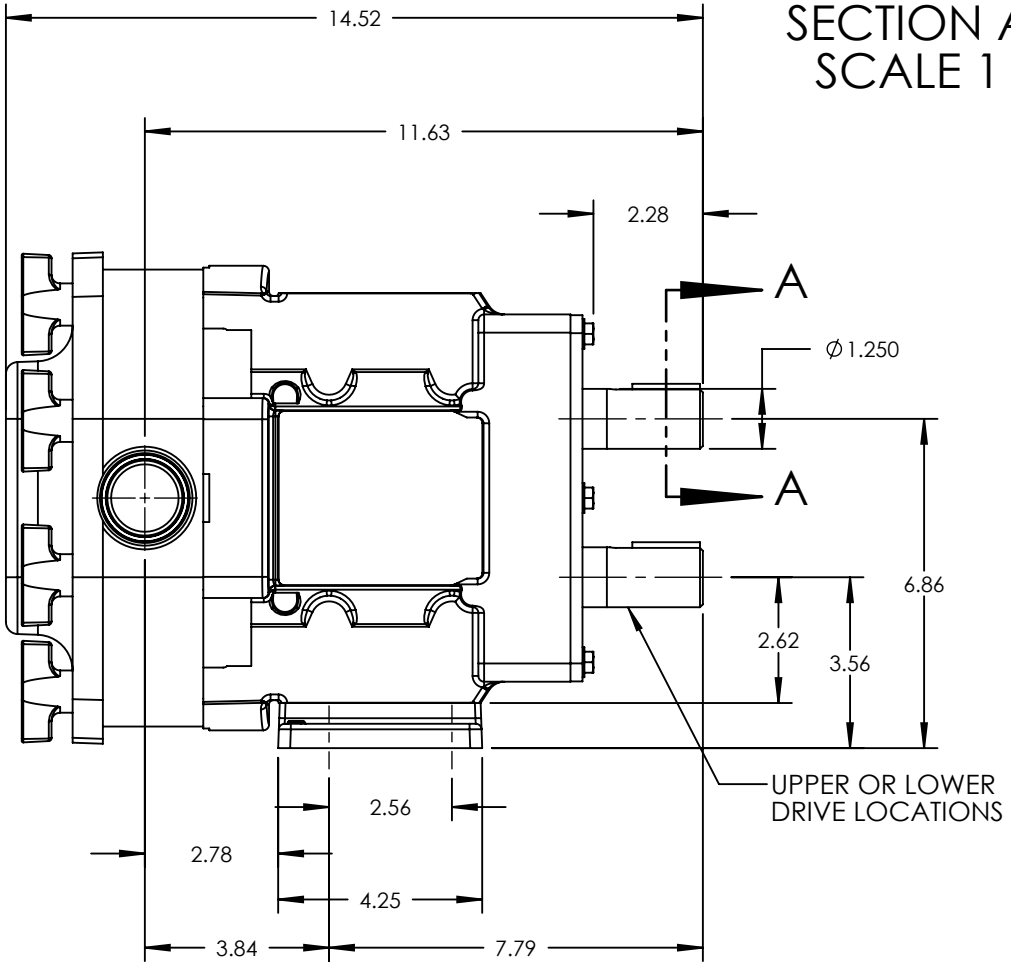

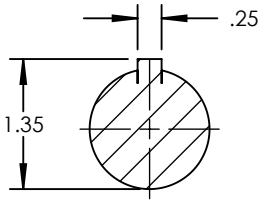

SECTION A-A
SCALE 1 : 2

NOTES:
1. THIS IS NOT A CERTIFIED DRAWING. USE FOR GENERAL INSTALLATION ONLY.
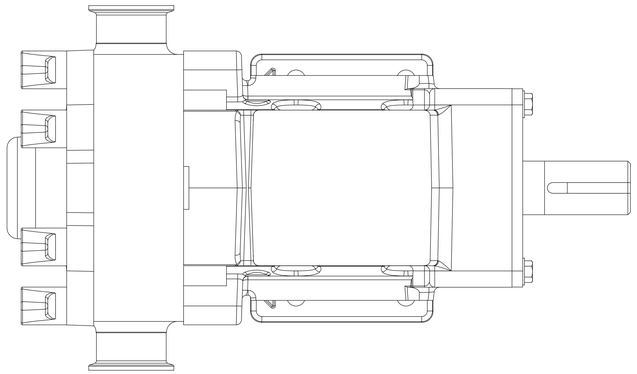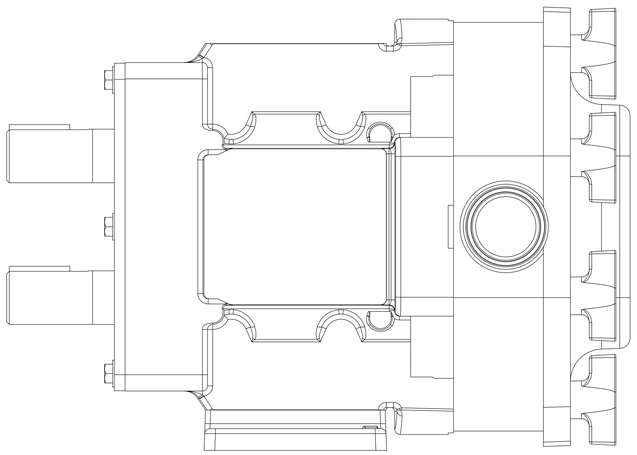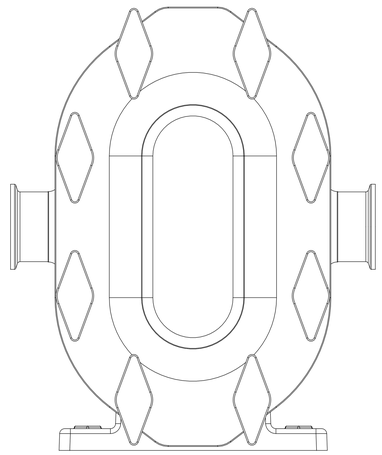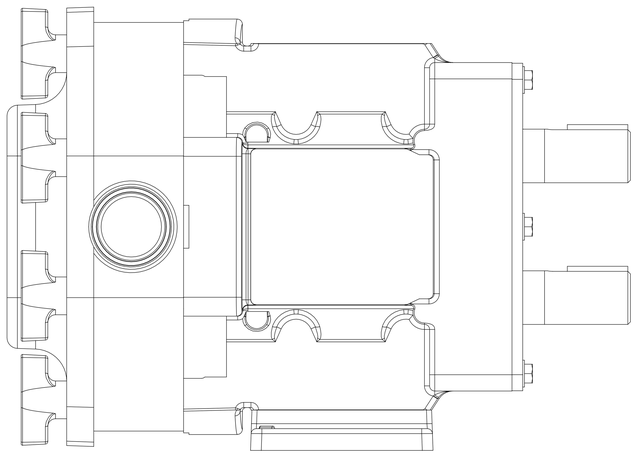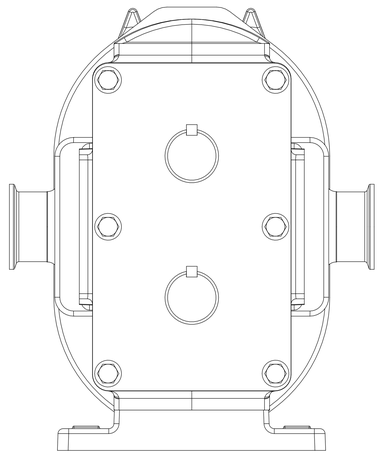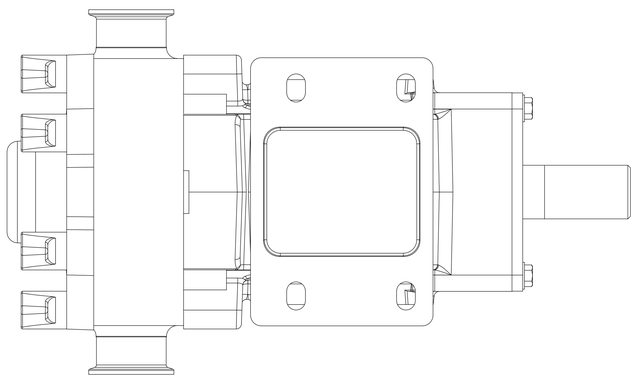
STATE	Released	11/28/2016	DIMENSIONS ARE IN INCHES	wrightflow TECHNOLOGIES	Wrightflow Technologies, A Unit of IDEX Corporation Cedar Falls, IA 50613 U.S.A. Eastborne, East Sussex, BN23 6PT UK	THIS DRAWING IS THE PROPERTY OF WRIGHTFLOW TECHNOLOGIES AND IS PROPRIETARY IN GENERAL AND DETAIL. IT SHALL NOT BE COPIED OR ITS CONTENTS REVEALED TO OUTSIDE PARTIES WITHOUT THE WRITTEN CONSENT OF WRIGHTFLOW TECHNOLOGIES	3D	DWG. NO. SHEET 1 OF 2	REV. D.0
DRAWN	cneff	9/4/2013	PROJECT:				TRA10-0300-004	11/28/2016
CHECKED	JAG	11/23/2016	WAS: