PUMP MODEL	TRA20-0180
ORIENTATION	HORIZONTAL
COVER TYPE	JACKETED
SUCTION	1.5" DIN 11851
DISCHARGE	1.5" DIN 11851
SPECIALS	NONE

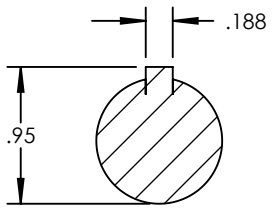

SECTION A-A
SCALE 3 : 4

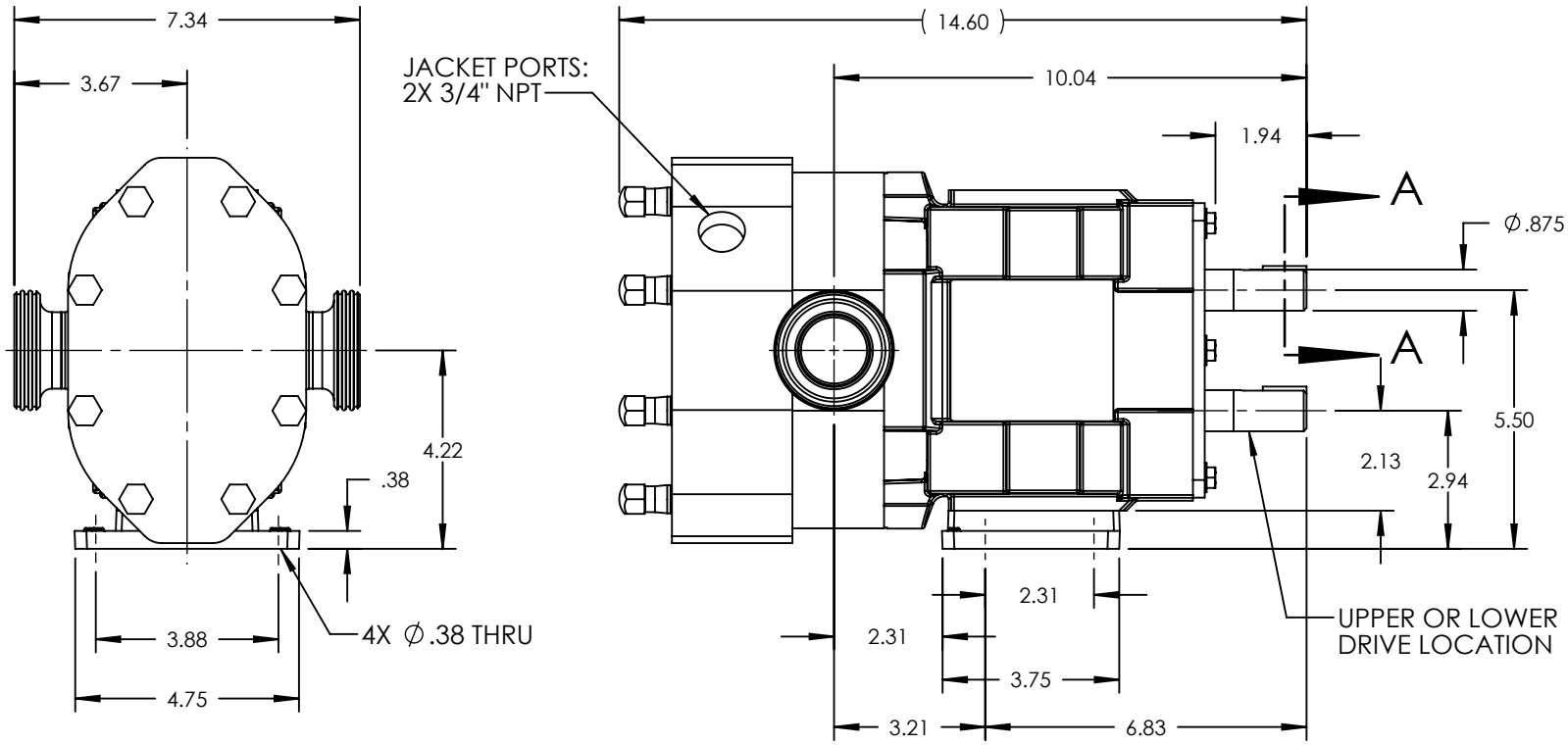

NOTES:
1. THIS IS NOT A CERTIFIED DRAWING. USE FOR GENERAL INSTALLATION ONLY.
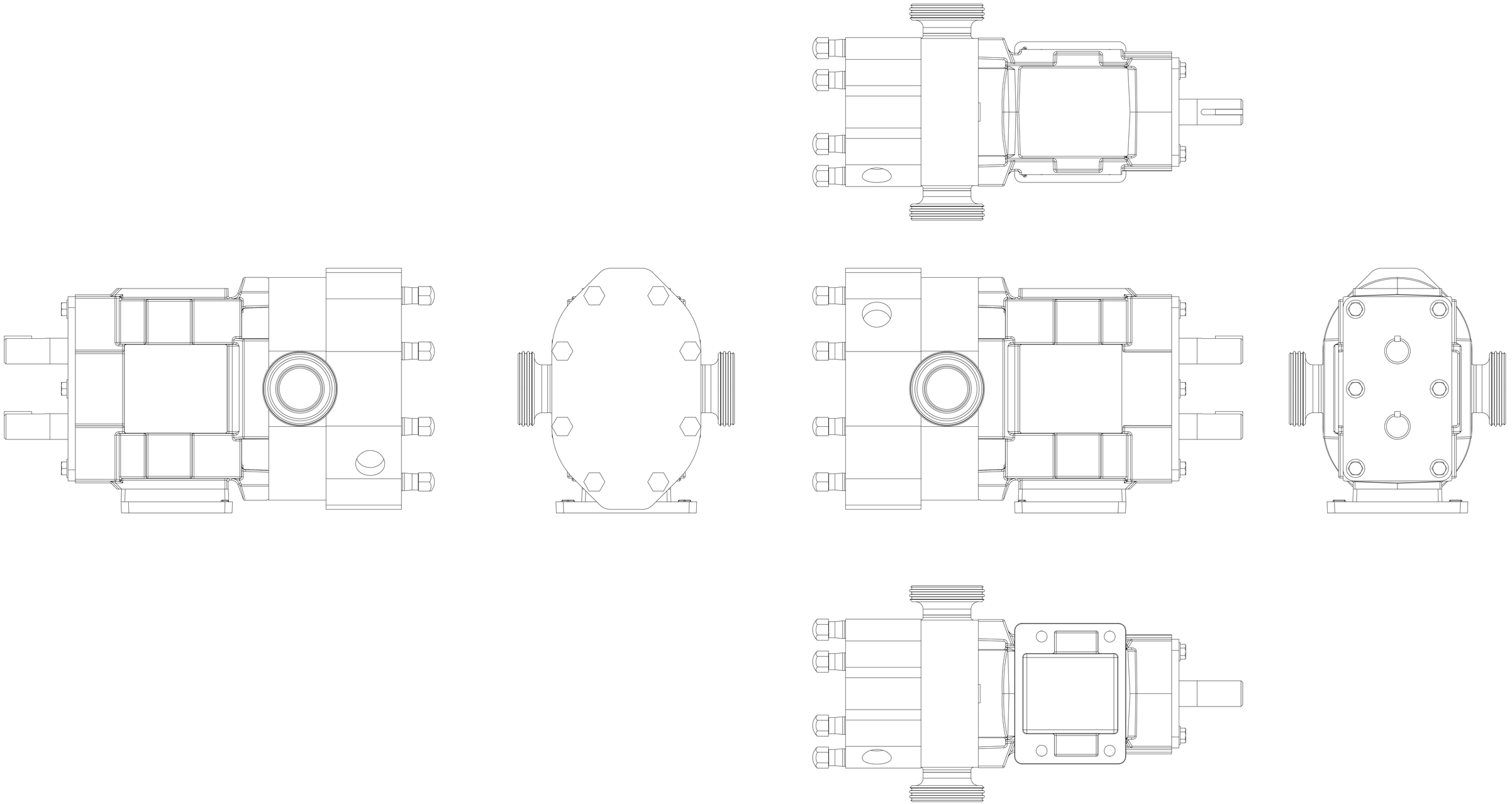
STATE	Released	11/16/2012	DIMENSIONS ARE IN INCHES	wrightflow TECHNOLOGIES — Wrightflow Technologies, A Unit of IDEX Corporation, Cedar Falls, IA 50613 U.S.A., Eastborne, East Sussex, BN23 6PT UK	THIS DRAWING IS THE PROPERTY OF WRIGHTFLOW TECHNOLOGIES AND IS PROPRIETARY IN GENERAL AND DETAIL. IT SHALL NOT BE COPIED OR ITS CONTENTS REVEALED TO OUTSIDE PARTIES WITHOUT THE WRITTEN CONSENT OF WRIGHTFLOW TECHNOLOGIES	3D	DWG. NO. SHEET 1 OF 2	REV. A.0
DRAWN	cmihm	11/15/2012	PROJECT:				TRA20-0180-013	11/16/2012
CHECKED	CJM	11/15/2012	WAS: