PUMP MODEL	TRA20-1300
ORIENTATION	HORIZONTAL
COVER TYPE	STANDARD
INLET	3.0" DIN 11851
DISCHARGE	3.0" DIN 11851
SPECIALS	NONE

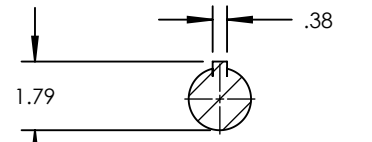

SECTION A-A

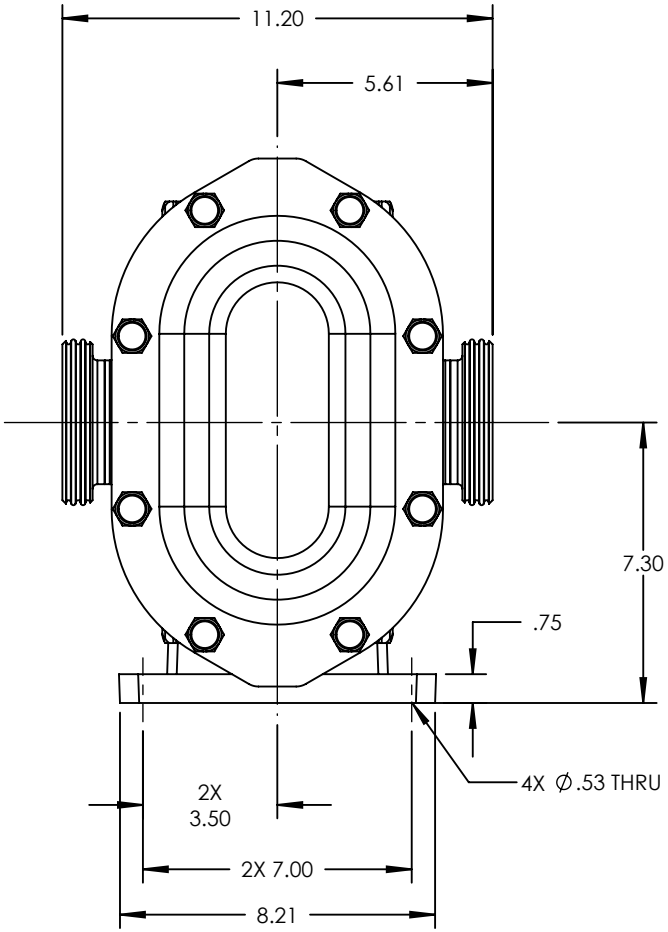

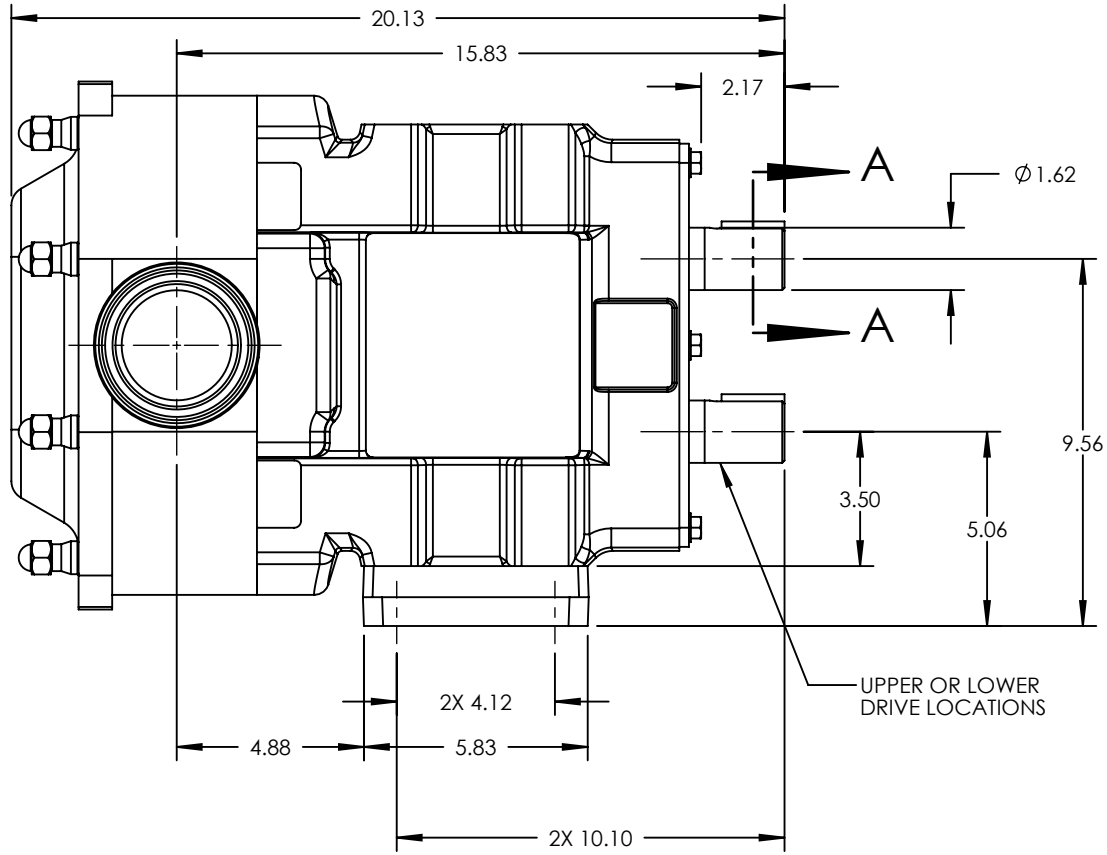

NOTES:
1. THIS IS NOT A CERTIFIED DRAWING. USE FOR GENERAL INSTALLATION ONLY.
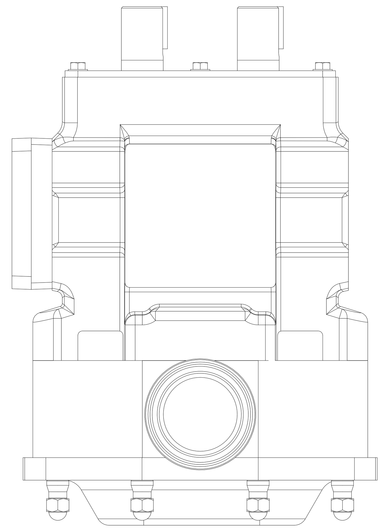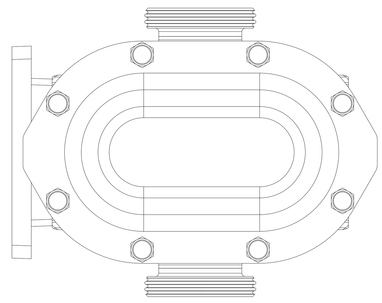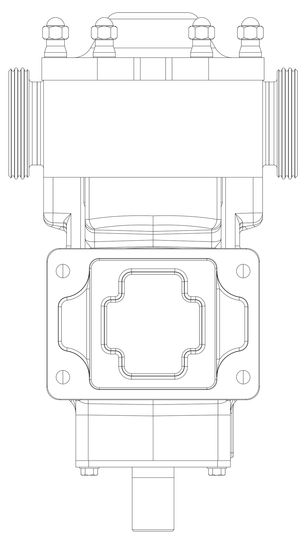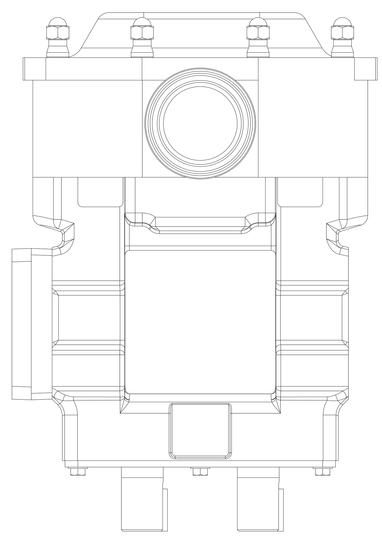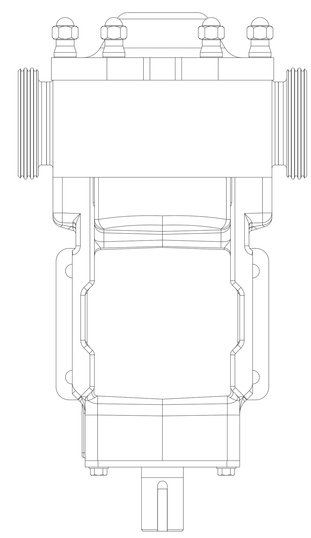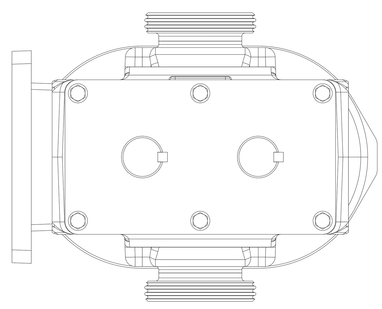
STATE	Released	08/25/2015	DIMENSIONS ARE IN INCHES	wrightflow TECHNOLOGIES	Wrightflow Technologies, A Unit of IDEX Corporation Cedar Falls, IA 50613 U.S.A. Eastborne, East Sussex, BN23 6PT UK	THIS DRAWING IS THE PROPERTY OF WRIGHTFLOW TECHNOLOGIES AND IS PROPRIETARY IN GENERAL AND DETAIL. IT SHALL NOT BE COPIED OR ITS CONTENTS REVEALED TO OUTSIDE PARTIES WITHOUT THE WRITTEN CONSENT OF WRIGHTFLOW TECHNOLOGIES	3D	DWG. NO. SHEET 1 OF 2	REV. A.0
DRAWN	jgerbig	8/25/2015	PROJECT:					TRA20-1300-018	
CHECKED	JAG	08/25/2015	WAS: